US 20180052277A1

(19) United States

(12) Patent Application Publication

Schowengerdt et al.

(10) Pub. No.: US 2018/0052277 A1

(43) Pub. Date: Feb. 22, 2018

(54) **MULTI-LAYER DIFFRACTIVE EYEPIECE**

(71) Applicant: **Magic Leap, Inc.**, Plantation, FL (US)

(72) Inventors: **Brian T. Schowengerdt**, Seattle, WA (US); **Dianmin Lin**, Los Altos, CA (US); **Pierre St. Hilaire**, Belmont, CA (US)

(73) Assignee: **Magic Leap, Inc.**, Plantation, FL (US)

(21) Appl. No.: **15/683,644**

(22) Filed: **Aug. 22, 2017**

Related U.S. Application Data

(60) Provisional application No. 62/377,831, filed on Aug. 22, 2016, provisional application No. 62/447,608, filed on Jan. 18, 2017, provisional application No. 62/449,524, filed on Jan. 23, 2017, provisional application No. 62/509,969, filed on May 23, 2017, provisional application No. 62/519,536, filed on Jun. 14, 2017, provisional application No. 62/521,889, filed on Jun. 19, 2017.

Publication Classification

(51) **Int. Cl.**

F21V 8/00	(2006.01)
G02B 27/01	(2006.01)
H04N 9/31	(2006.01)

(52) **U.S. Cl.**

CPC ***G02B 6/0076*** (2013.01); ***G02B 6/0038*** (2013.01); ***G02B 27/0172*** (2013.01); *G02B 27/0081* (2013.01); ***H04N 9/3102*** (2013.01); *G02B 2027/0174* (2013.01); *G02B 2027/0114* (2013.01); ***H04N 9/3164*** (2013.01)

(57) **ABSTRACT**

An eyepiece for projecting an image to an eye of a viewer includes a waveguide configured to propagate light in a first wavelength range, and a grating coupled to a back surface of the waveguide. The grating is configured to diffract a first portion of the light propagating in the waveguide out of a plane of the waveguide toward a first direction, and to diffract a second portion of the light propagating in the waveguide out of the plane of the waveguide toward a second direction opposite to the first direction. The eyepiece furthers include a wavelength-selective reflector coupled to a front surface of the waveguide. The wavelength selective reflector is configured to reflect light in the first wavelength range and transmit light outside the first wavelength range, such that the wavelength-selective reflector reflects at least part of the second portion of the light back toward the first direction.

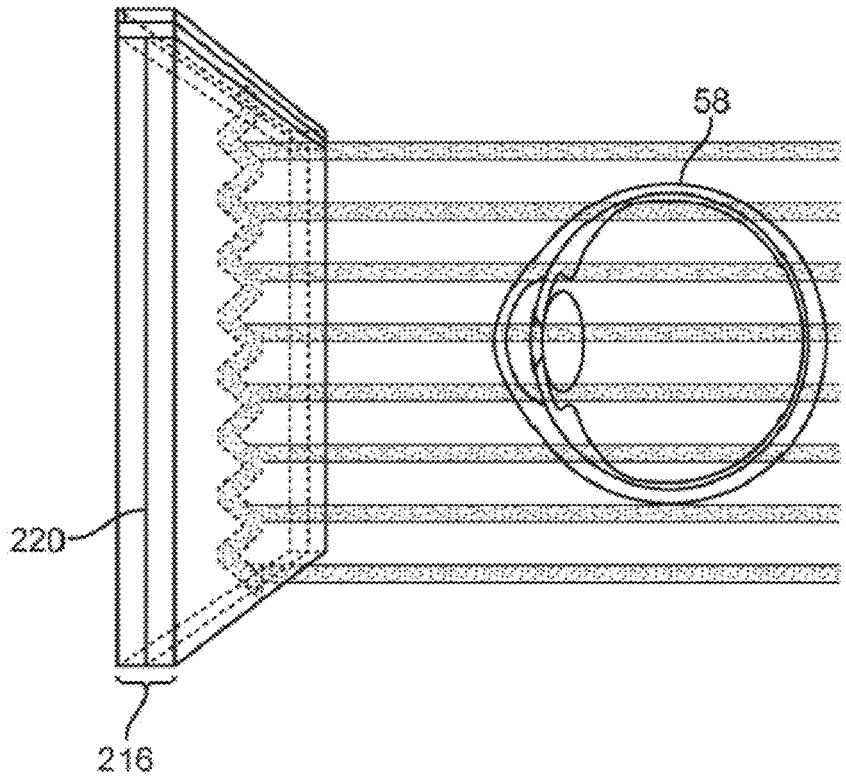

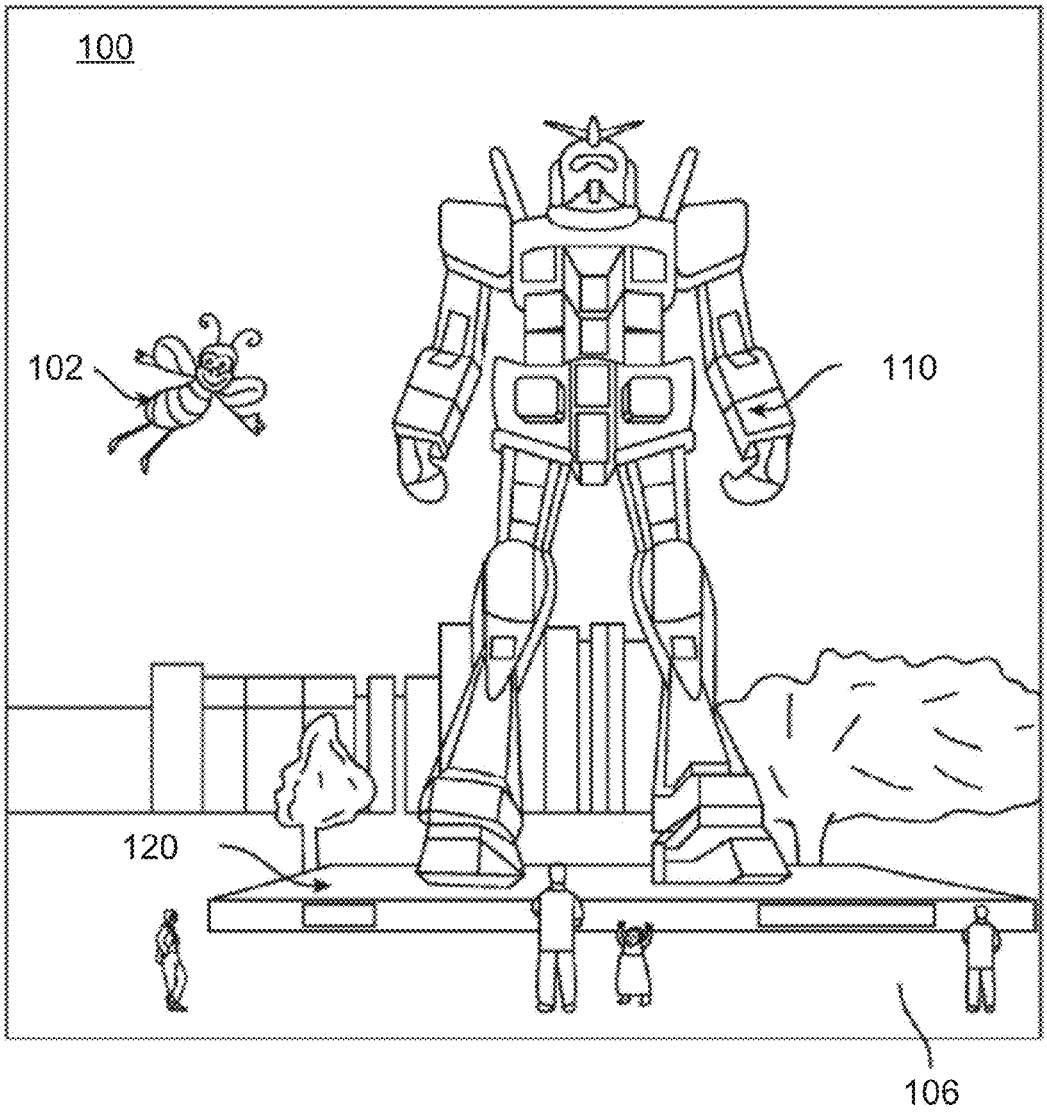

FIG. 1

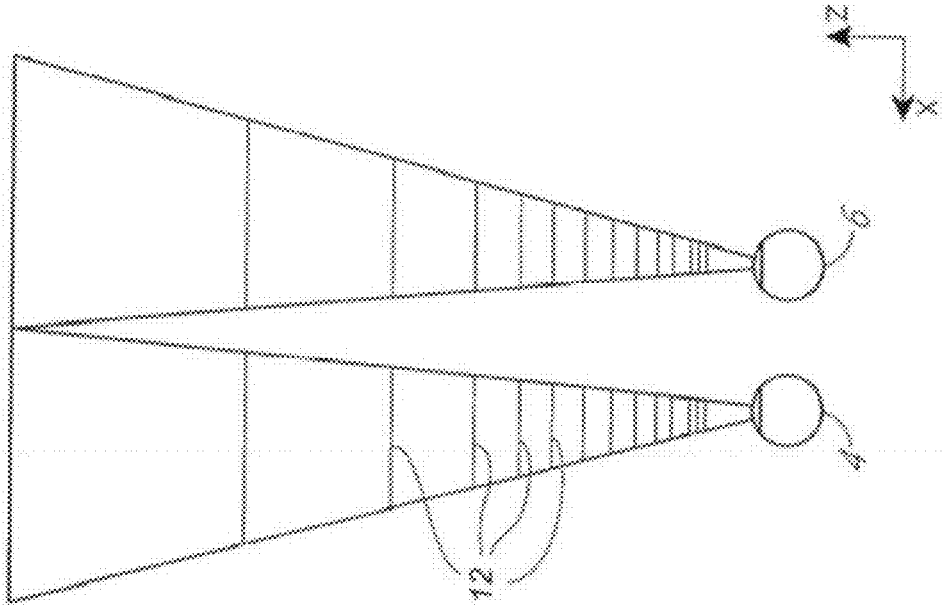

FIG. 2B

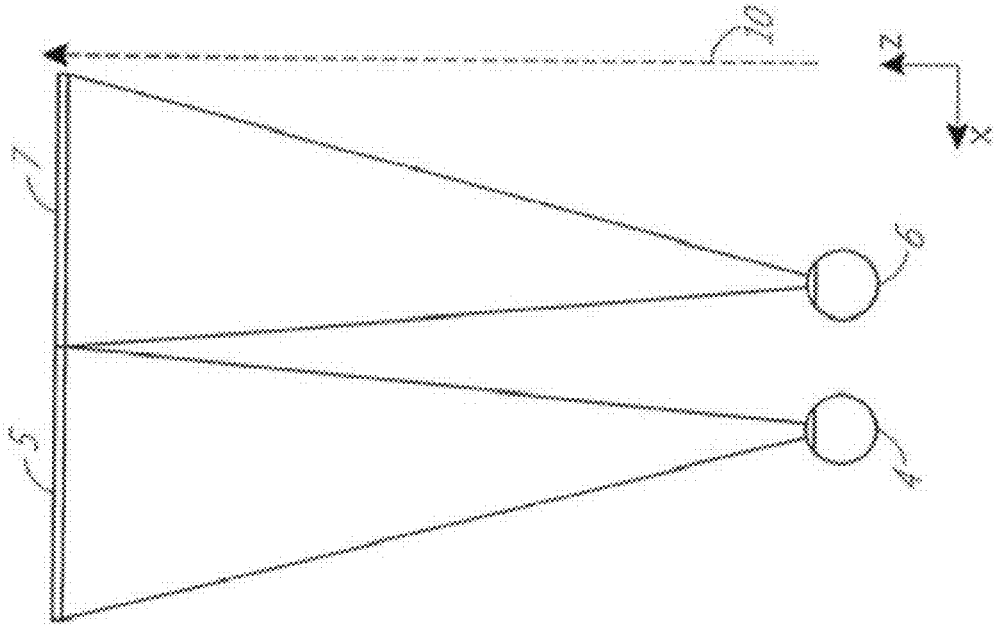

FIG. 2A

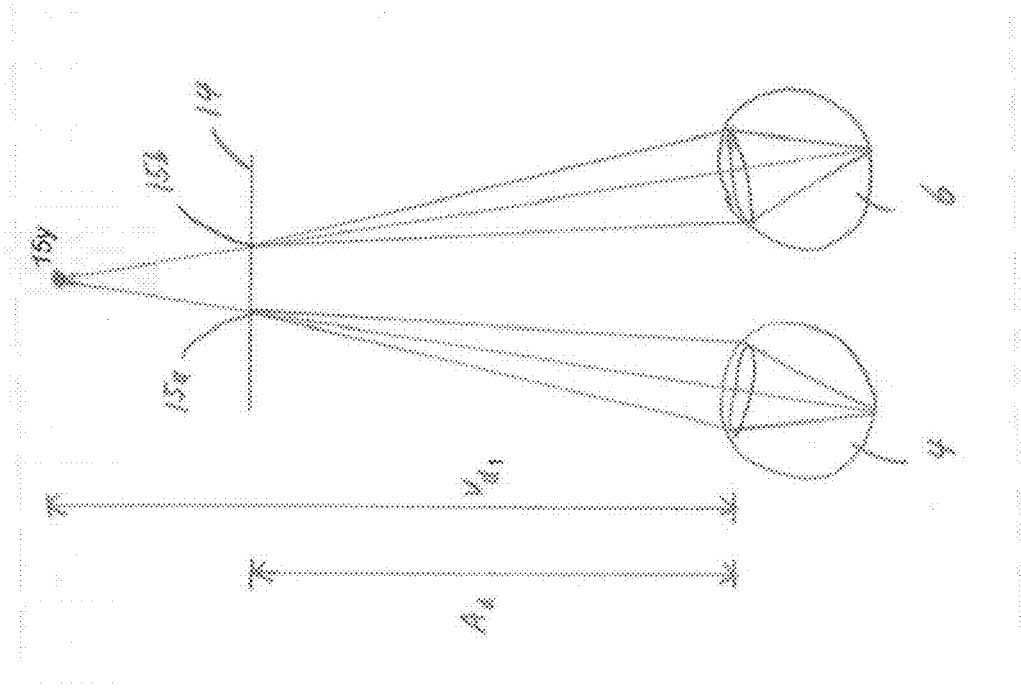

FIG. 3B

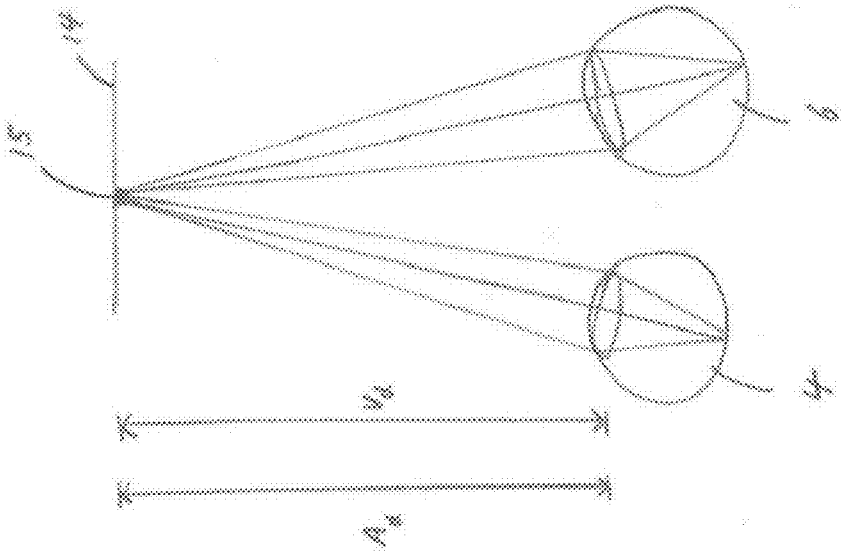

FIG. 3A

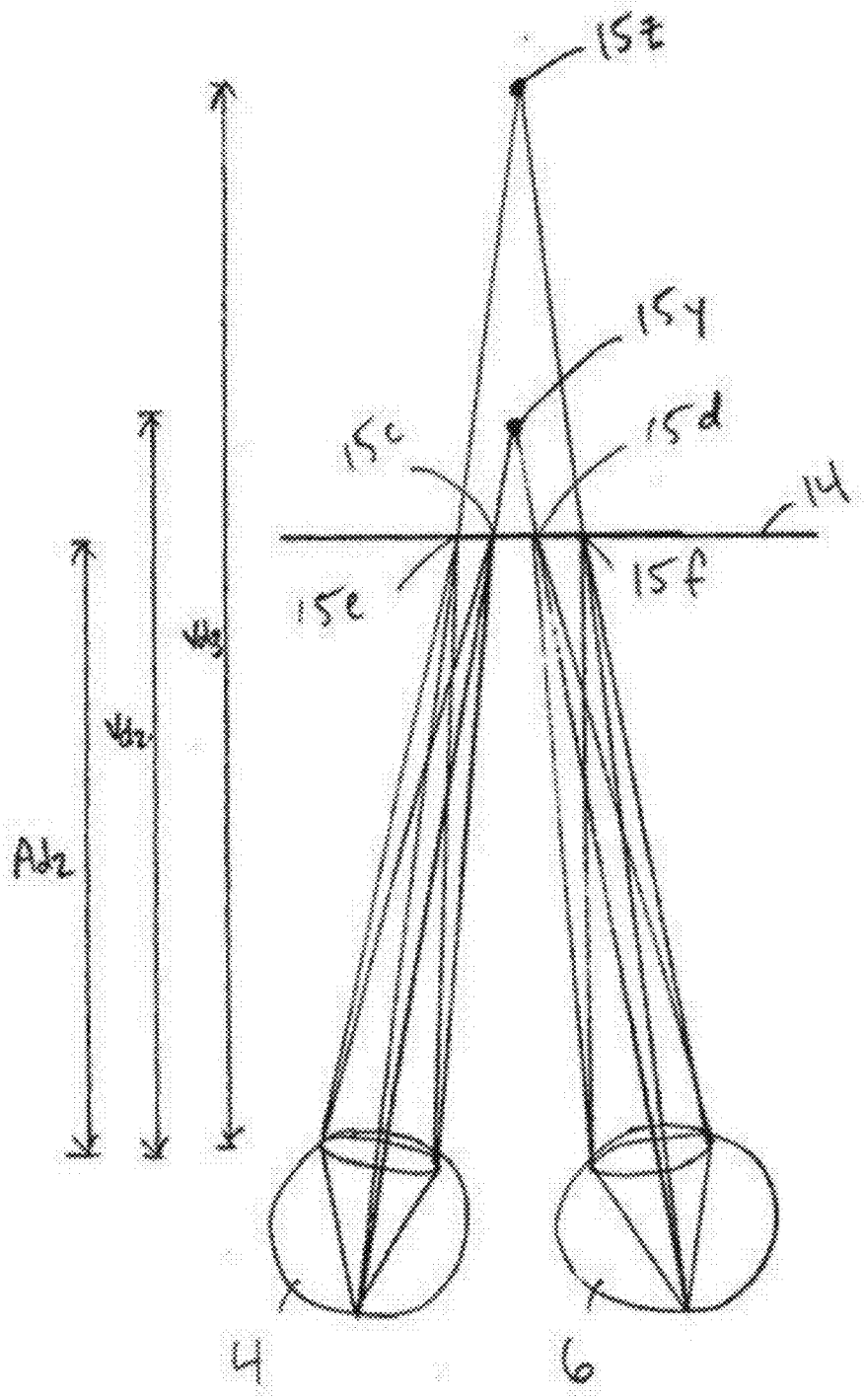

FIG. 4

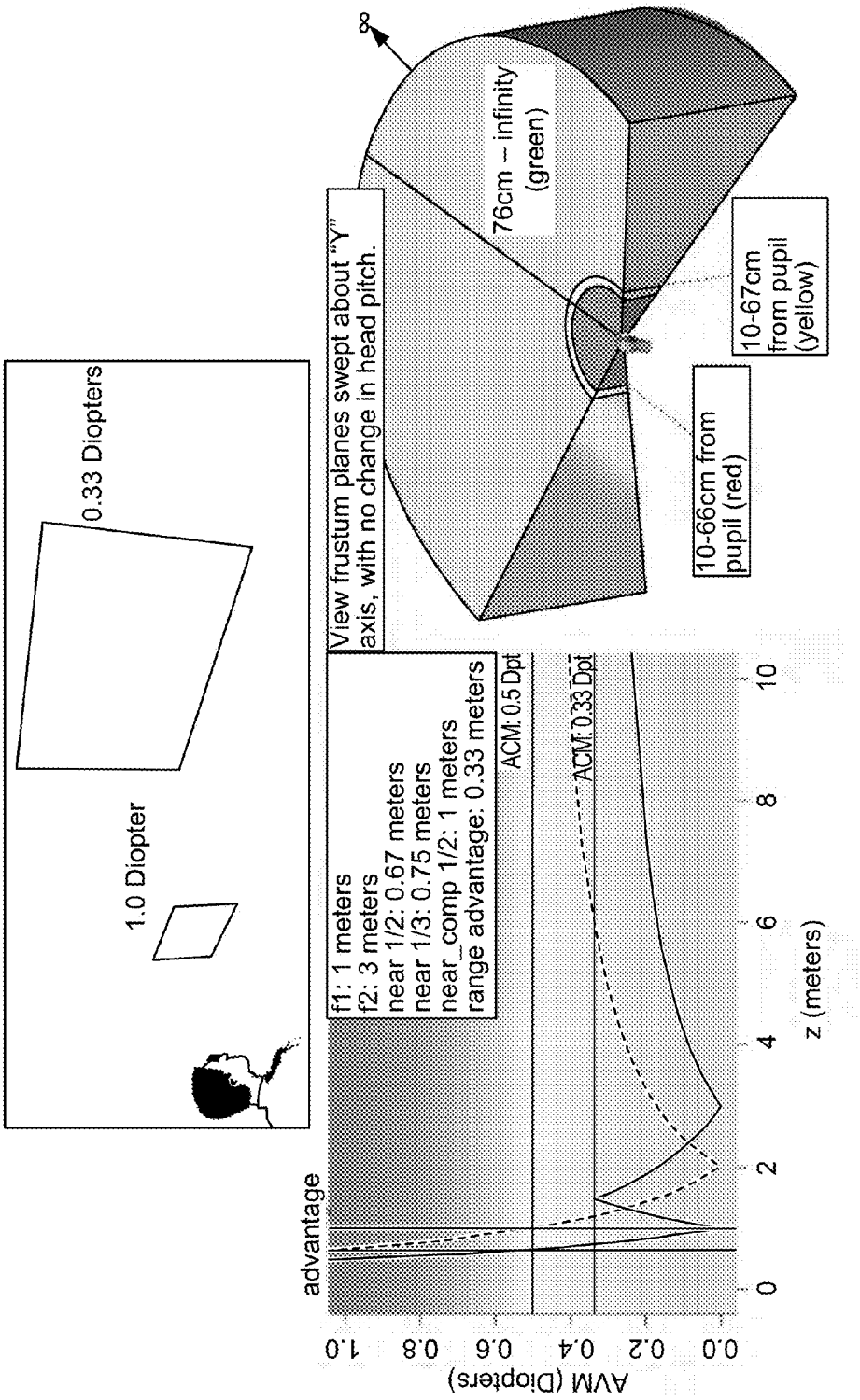
0.33 Diopters
1.0 Diopter
View frustum planes swept about "Y" axis, with no change in head pitch.
∞
76cm – infinity (green)
10-67cm from pupil (yellow)
10-66cm from pupil (red)
f1: 1 meters
f2: 3 meters
near 1/2: 0.67 meters
near 1/3: 0.75 meters
near_comp 1/2: 1 meters
range advantage: 0.33 meters
ACM: 0.5 Dpt
ACM: 0.33 Dpt
advantage
AVM (Diopters)
1.0
0.8
0.6
0.4
0.2
0.0
0
2
4
6
8
10
z (meters)

FIG. 5

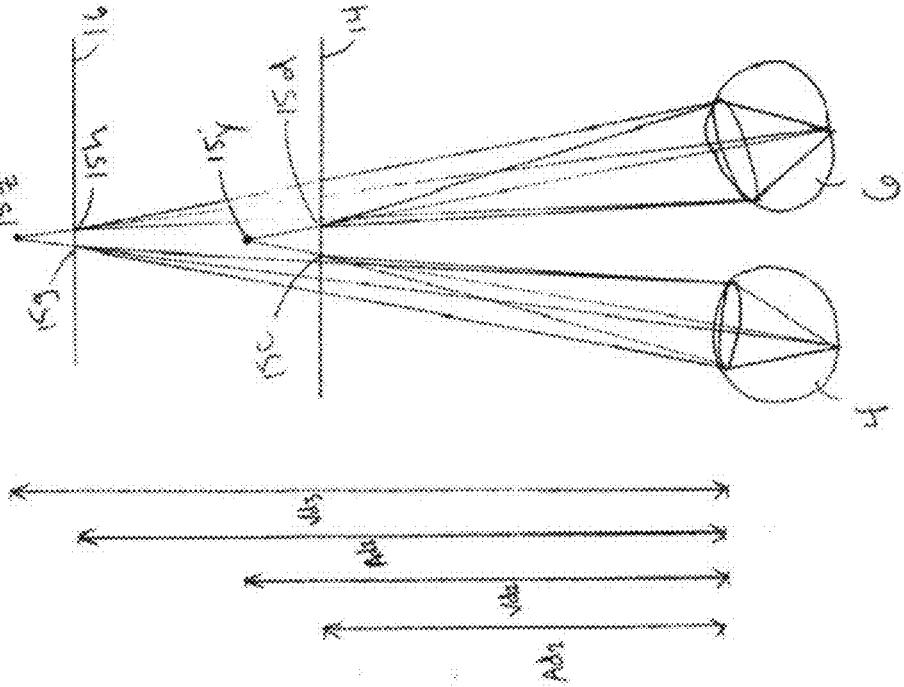

FIG. 6B

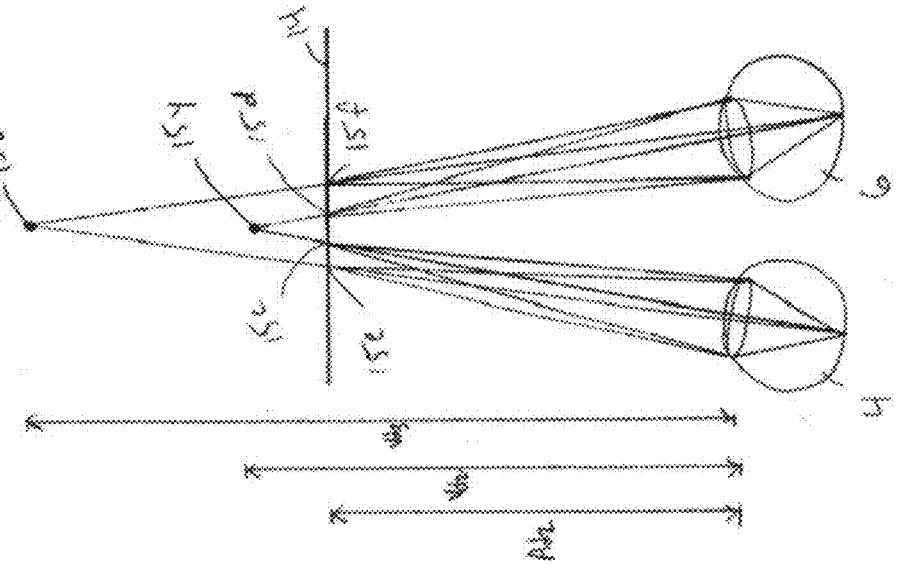

FIG. 6A

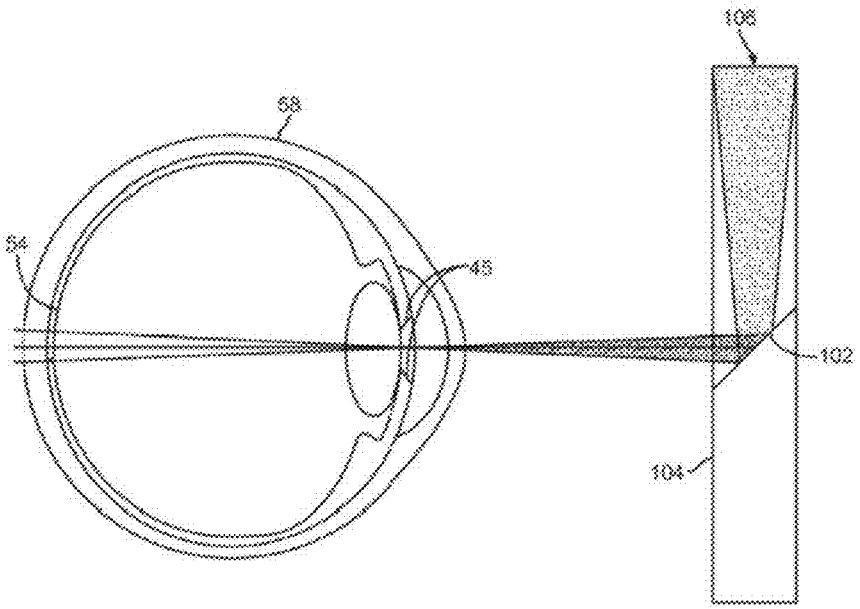

FIG. 7A

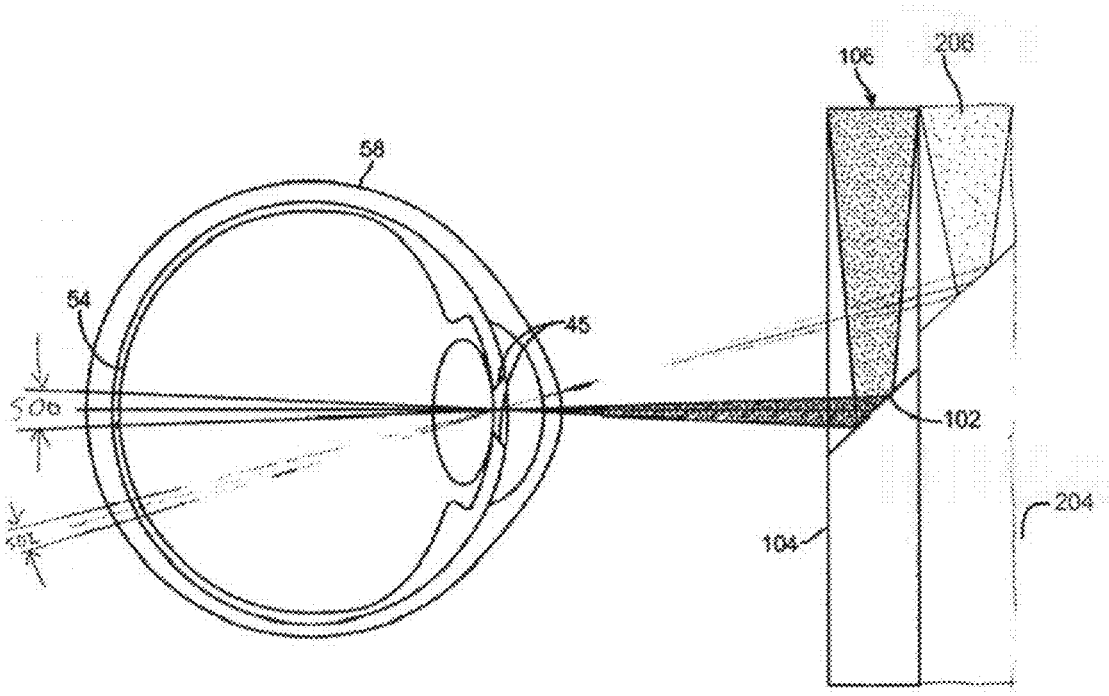

FIG. 7B

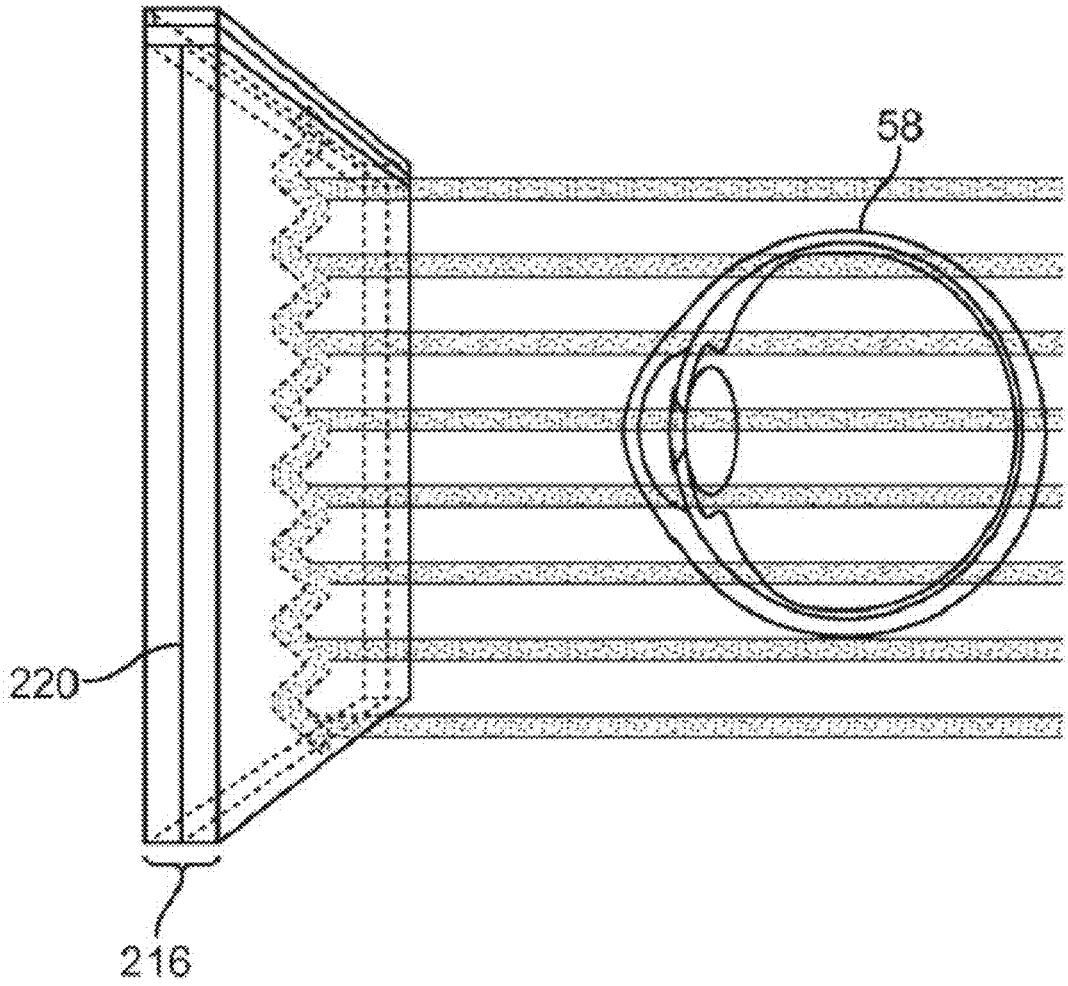

FIG. 8

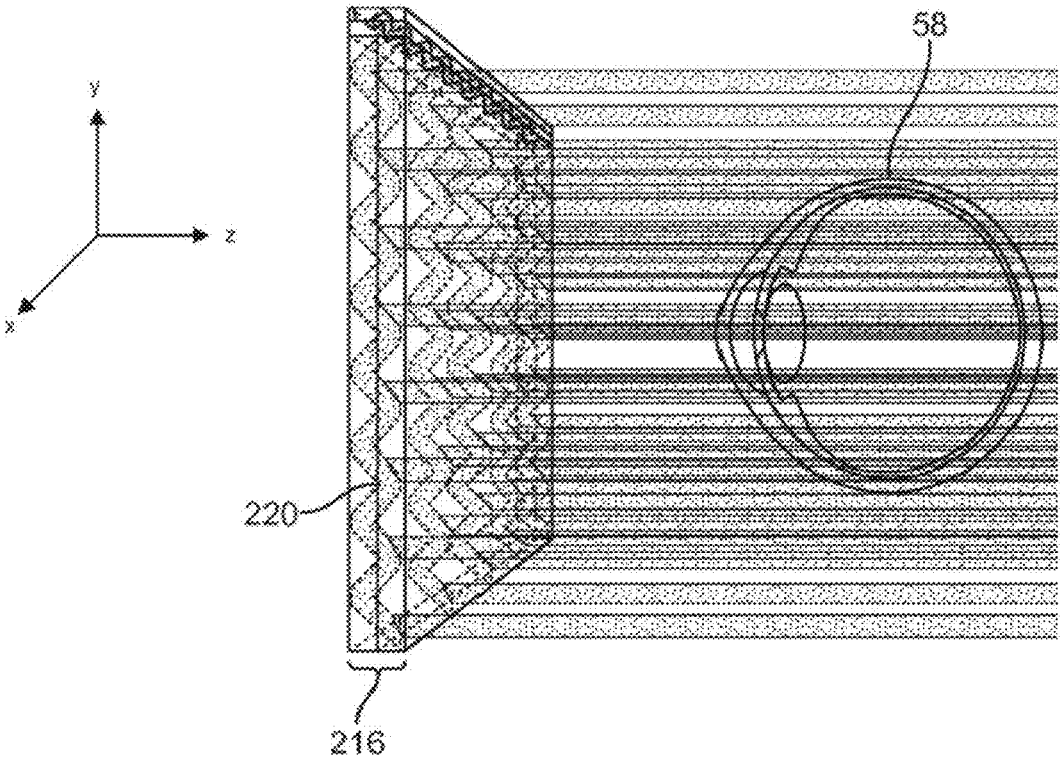

FIG. 9

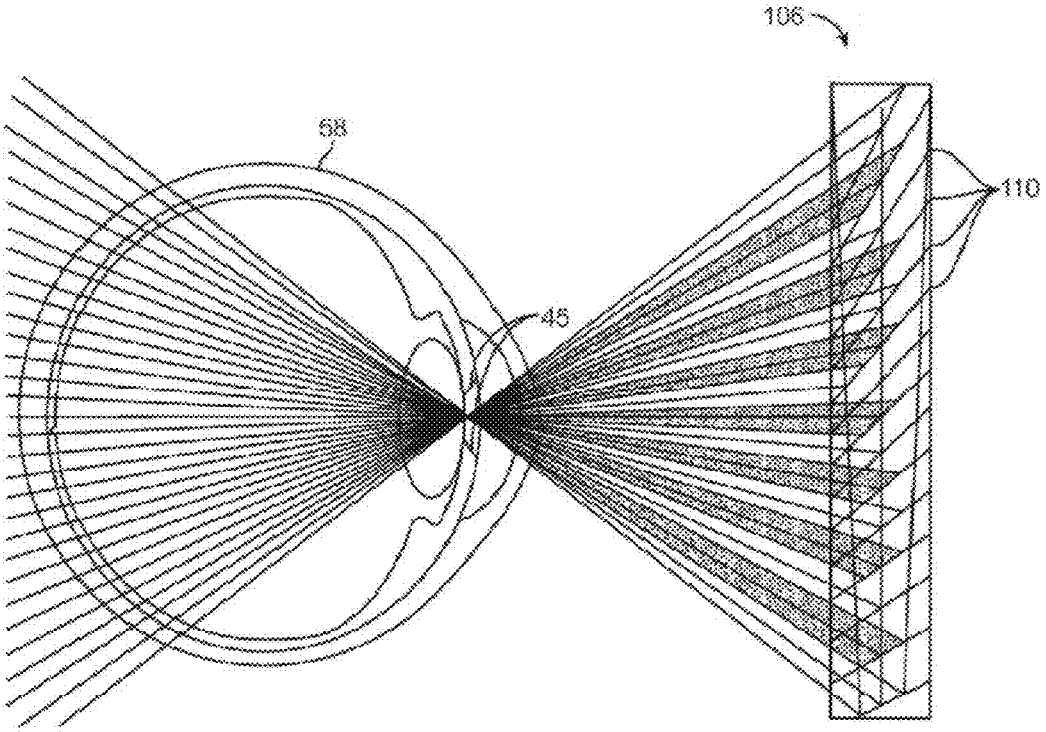

FIG. 10

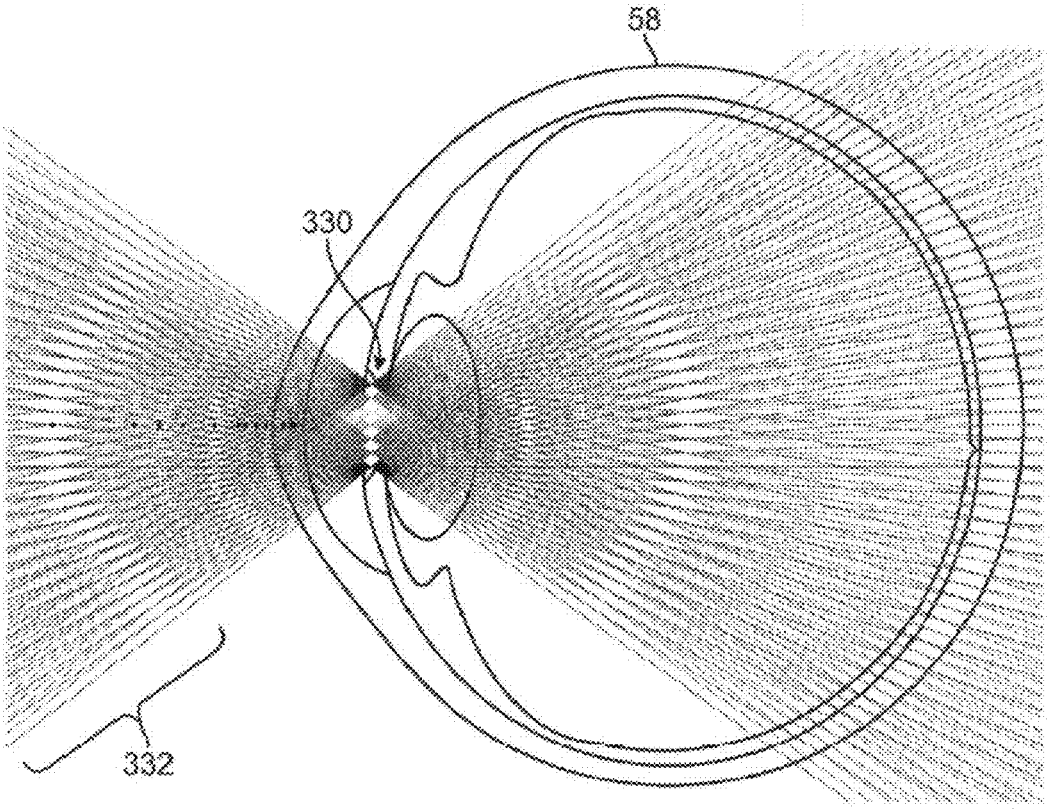

FIG. 11

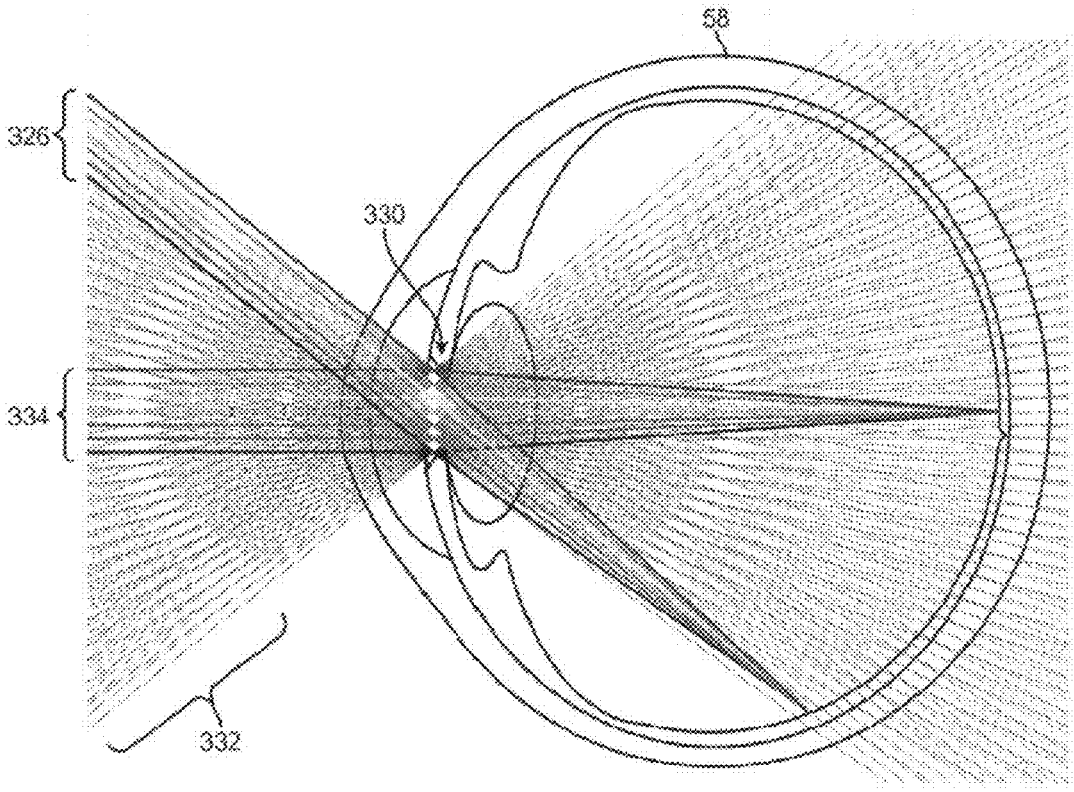

FIG. 12

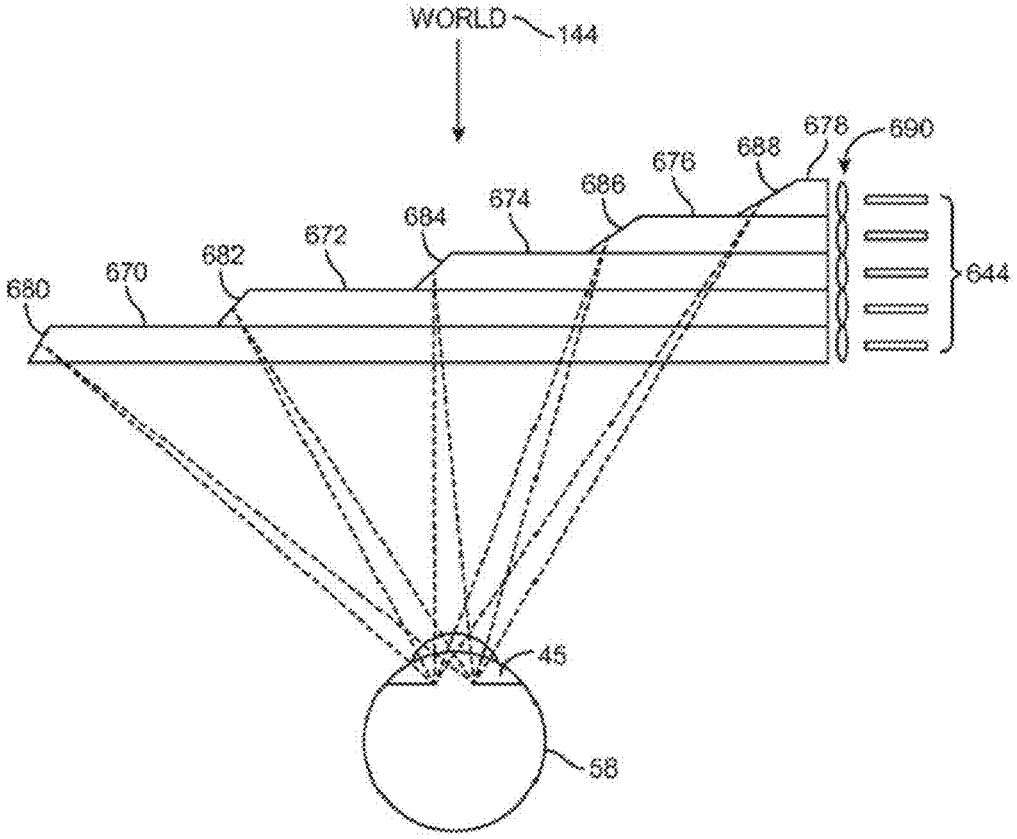

FIG. 13

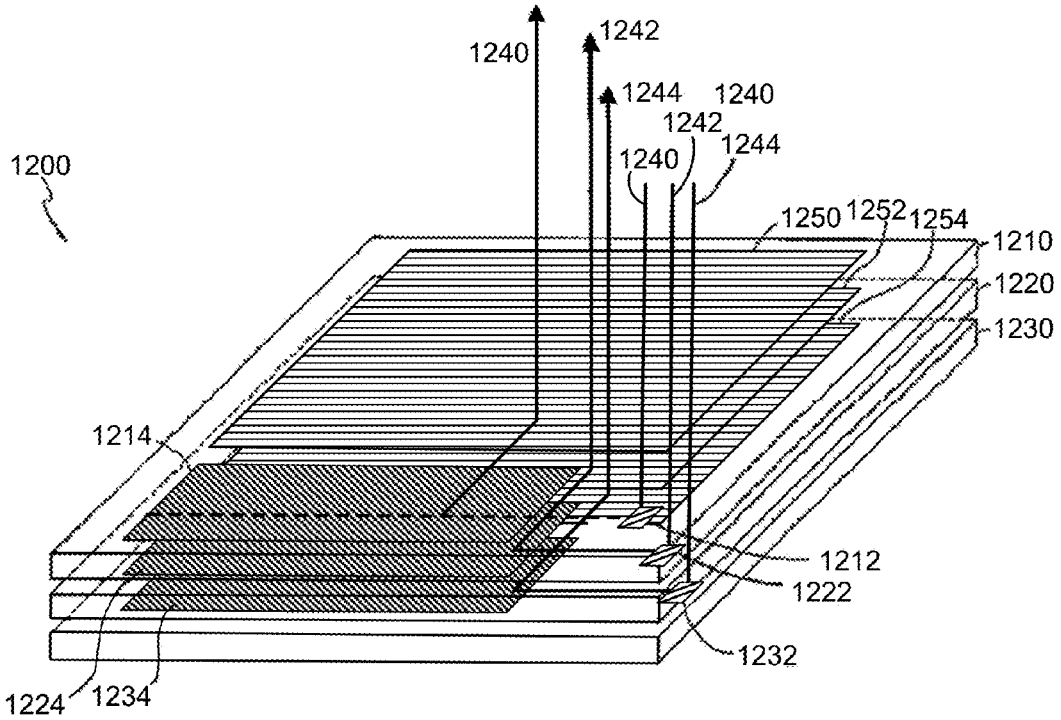
1240
1242
1244
1240
1242
1240
1244
1200
1250
1252
1254
1210
1220
1230
1214
1212
1222
1232
1224
1234

FIG. 14

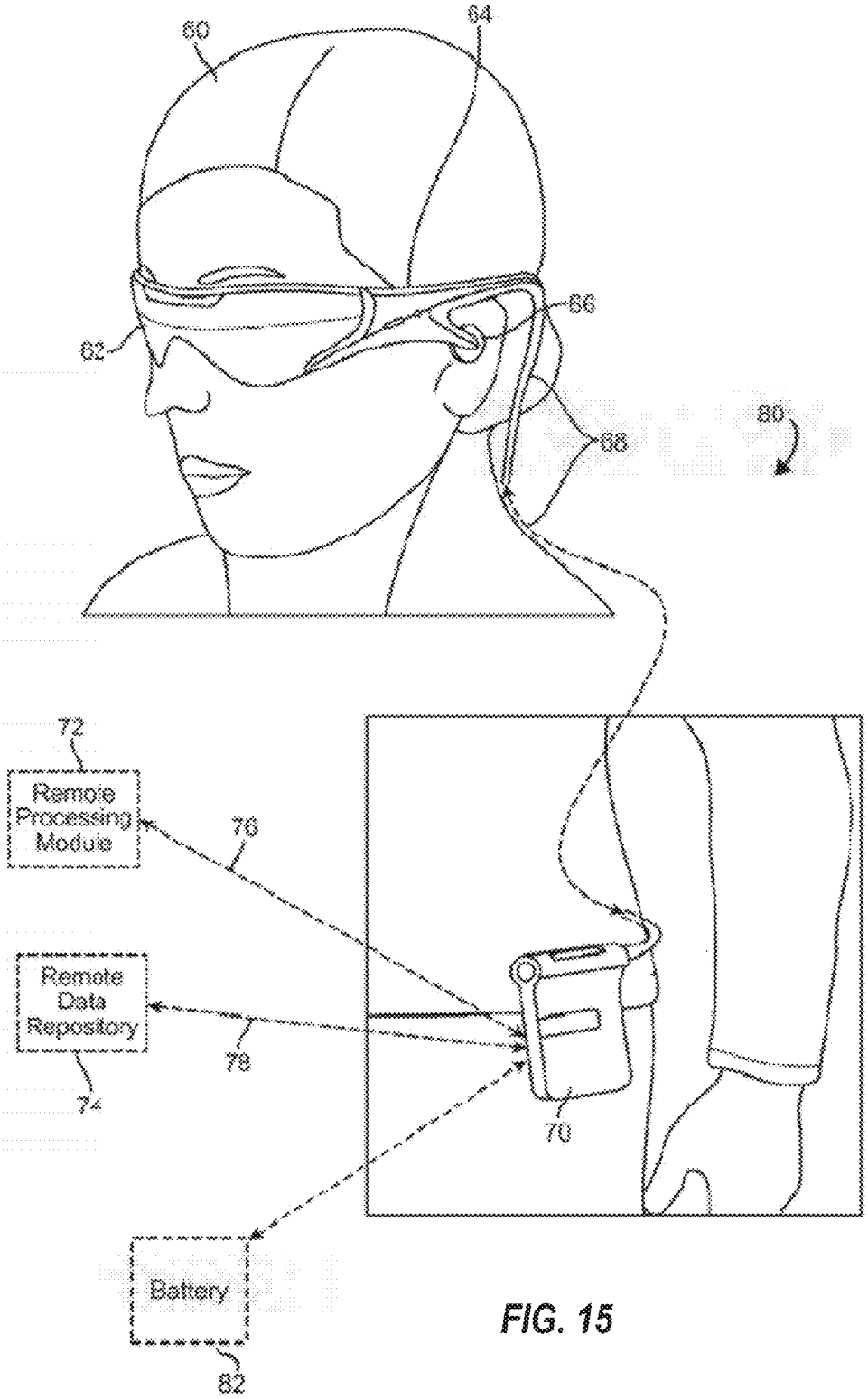
60
64
66
62
68
80
72
Remote Processing Module
76
Remote Data Repository
78
74
70
Battery
82

FIG. 15

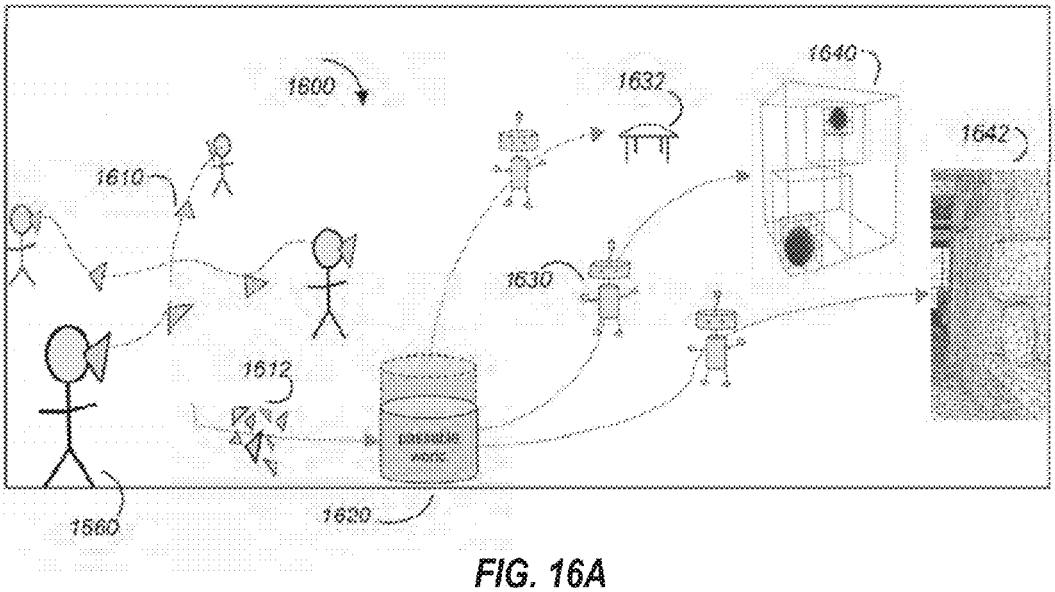

FIG. 16A

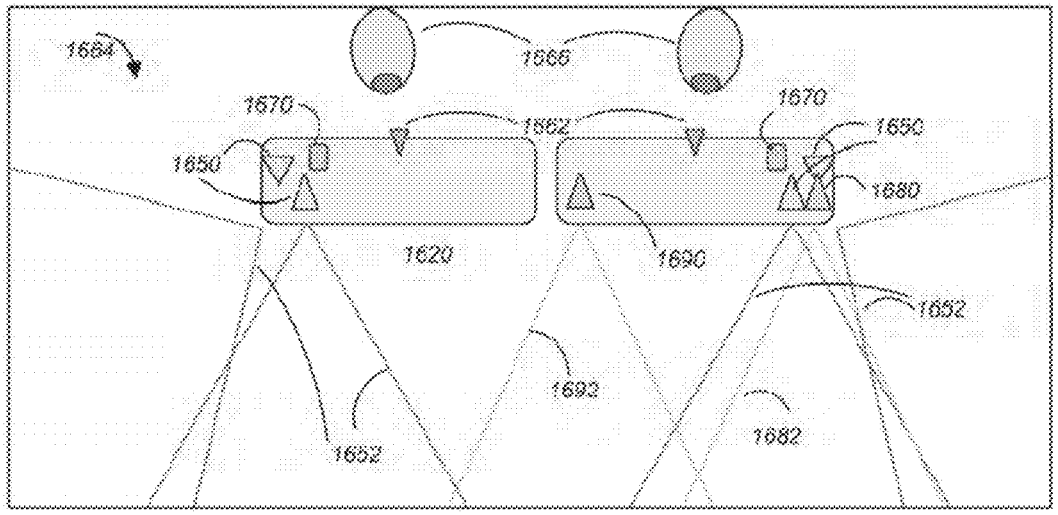

FIG. 16B

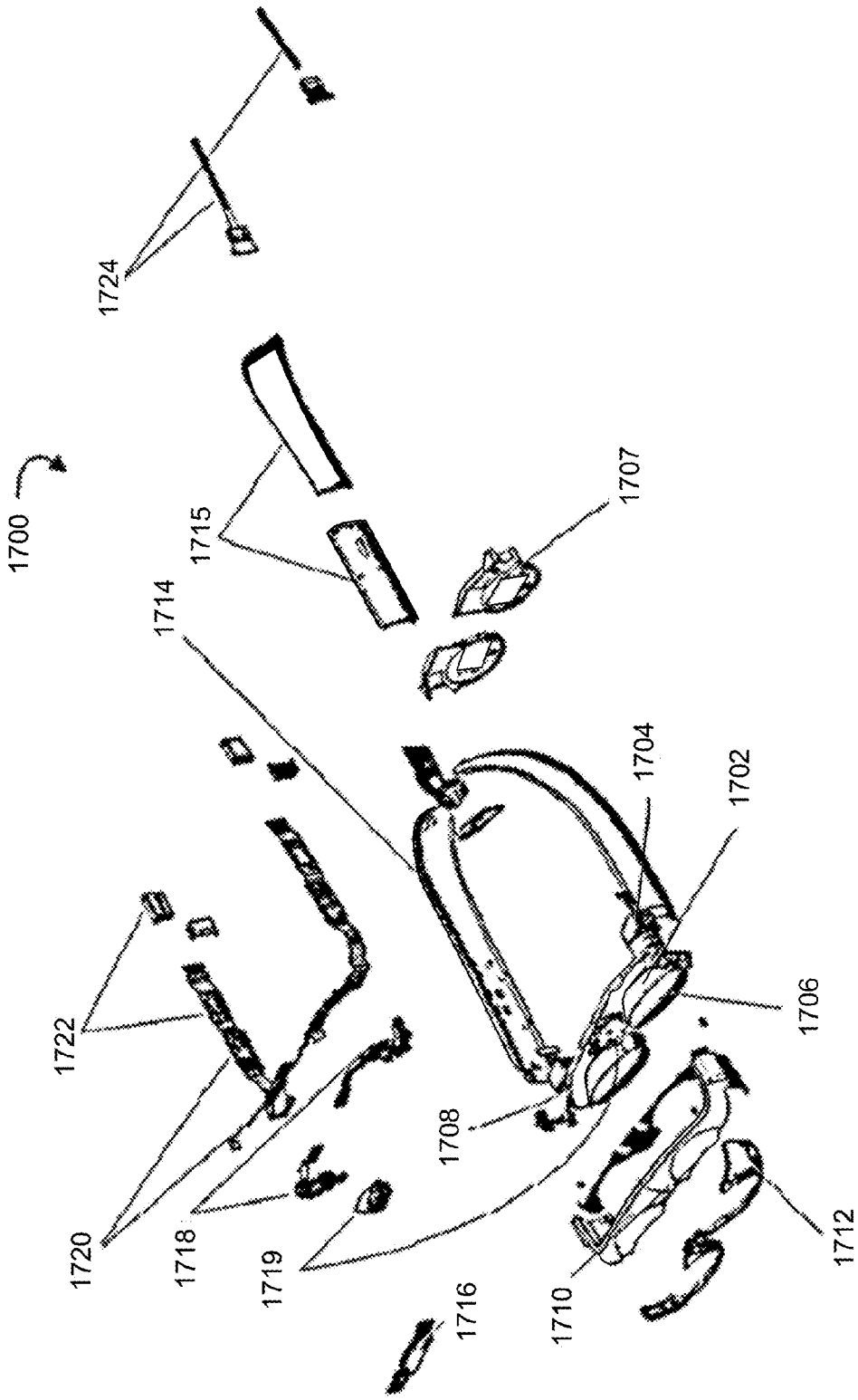
1700
1724
1715
1714
1707
1704
1702
1706
1722
1720
1718
1719
1708
1716
1710
1712

FIG. 17

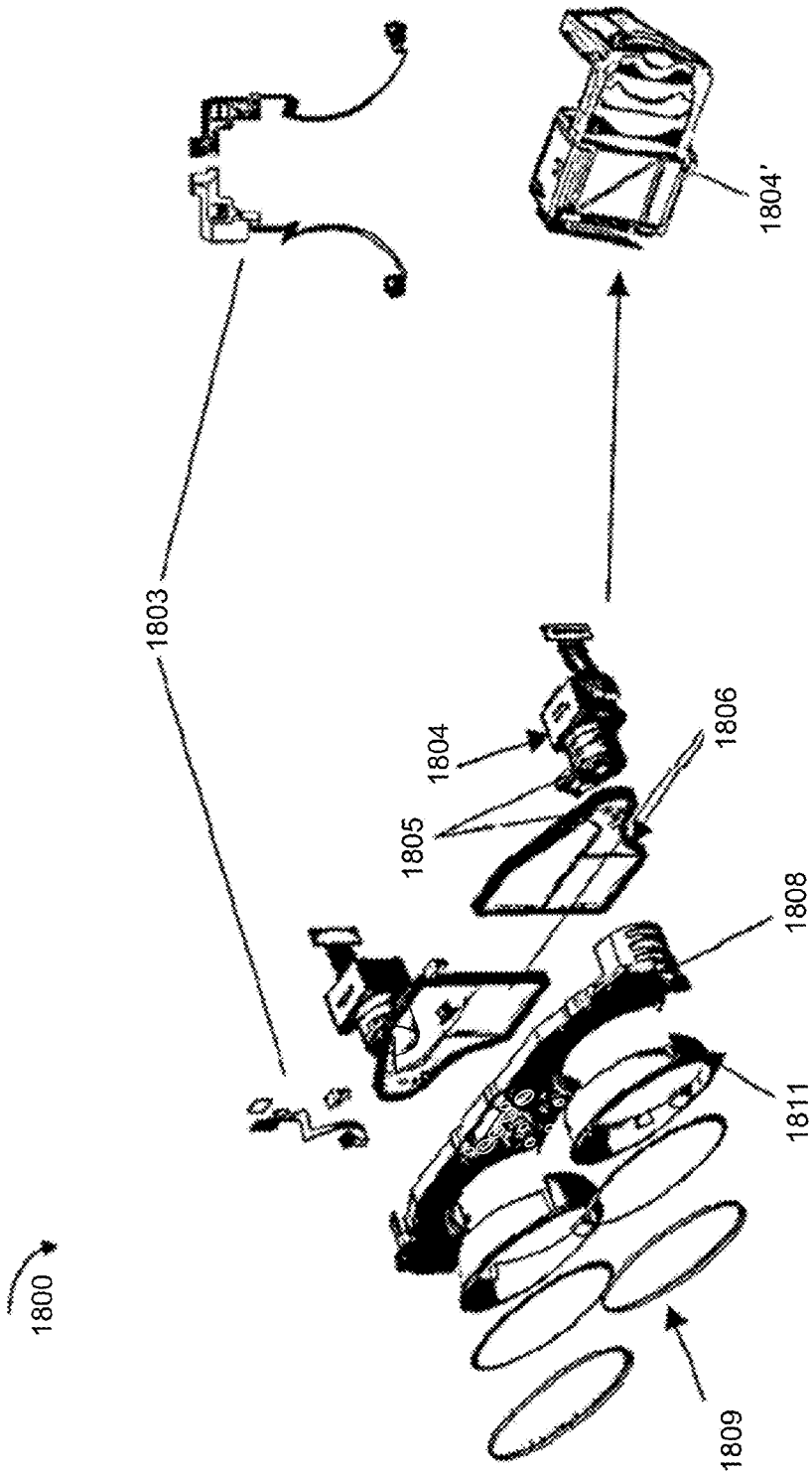

FIG. 18

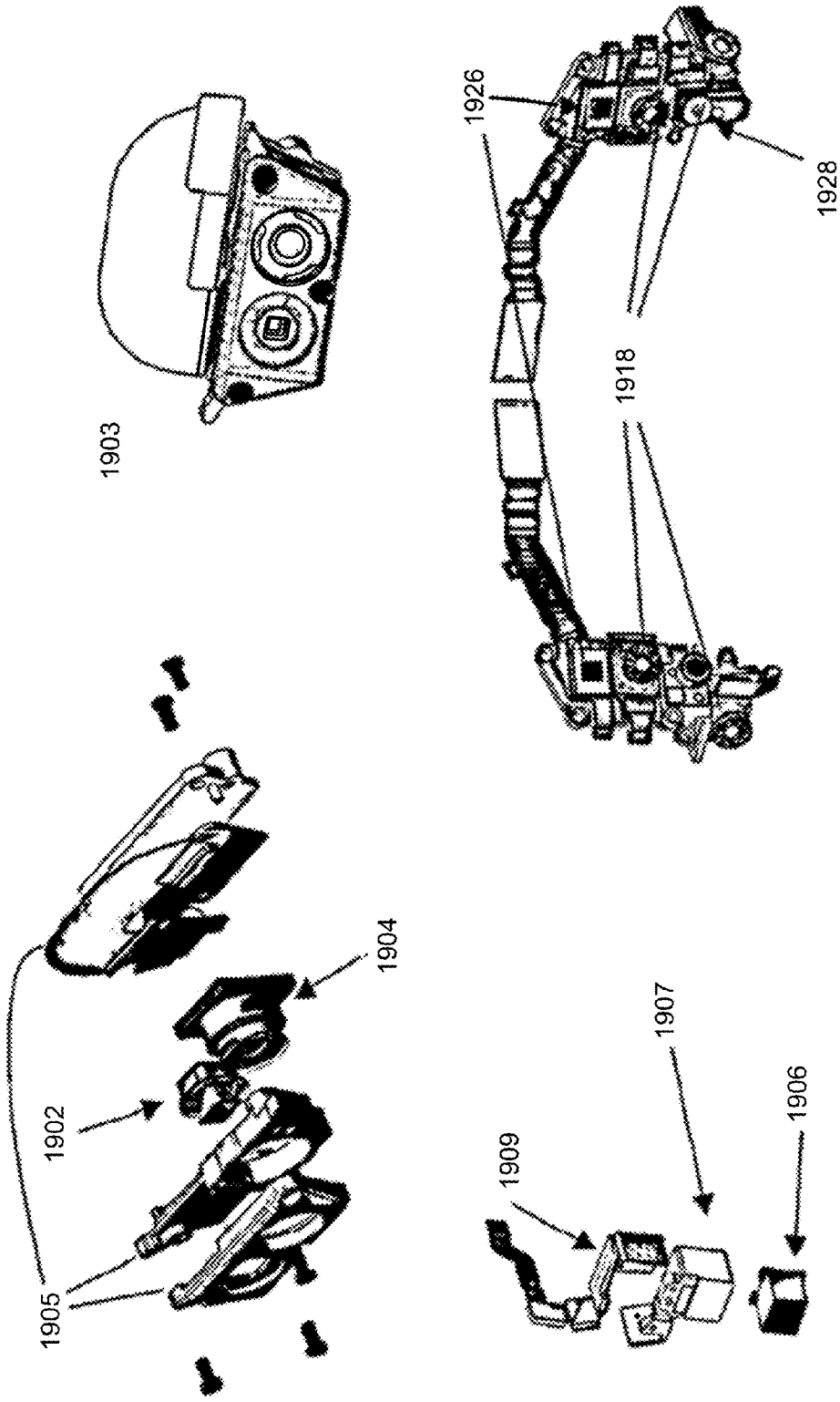

FIG. 19

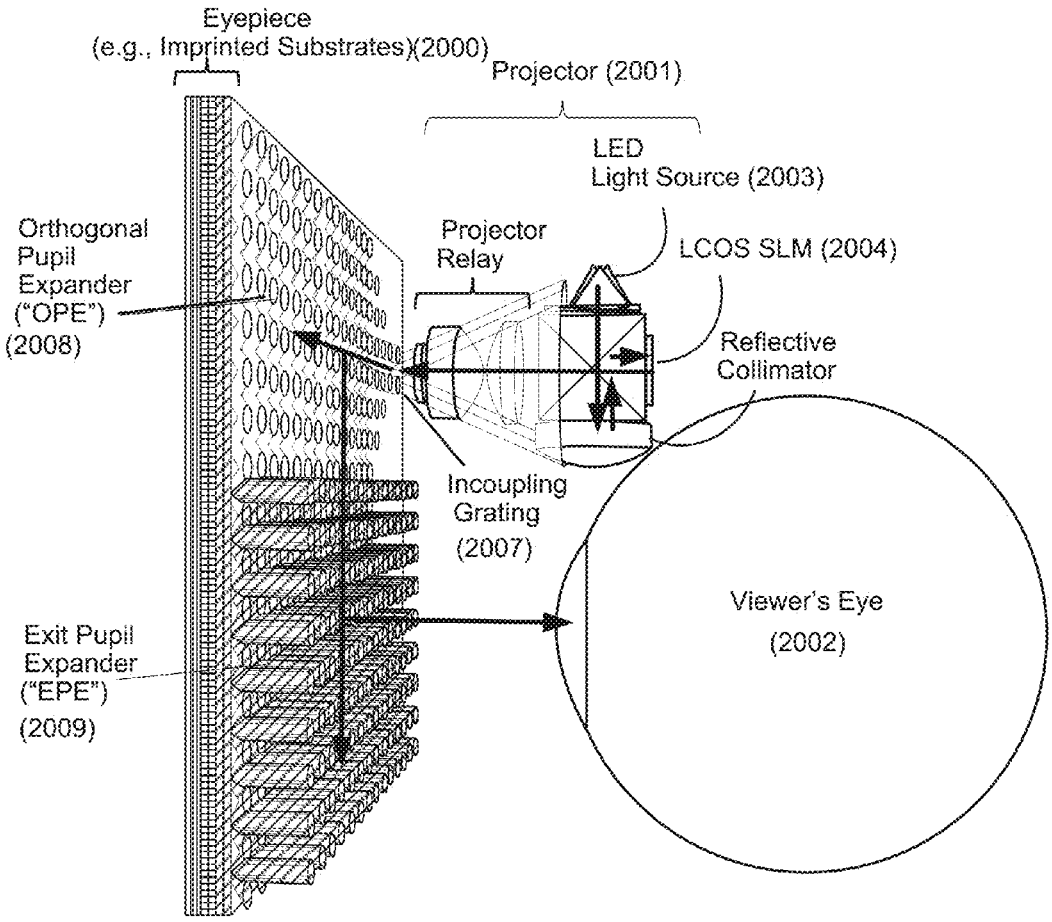
Eyepiece
(e.g., Imprinted Substrates)(2000)
Projector (2001)
LED
Light Source (2003)
Orthogonal
Pupil
Expander
("OPE")
(2008)
Projector
Relay
LCOS SLM (2004)
Reflective
Collimator
Incoupling
Grating
(2007)
Viewer's Eye
(2002)
Exit Pupil
Expander
("EPE")
(2009)

FIG. 20

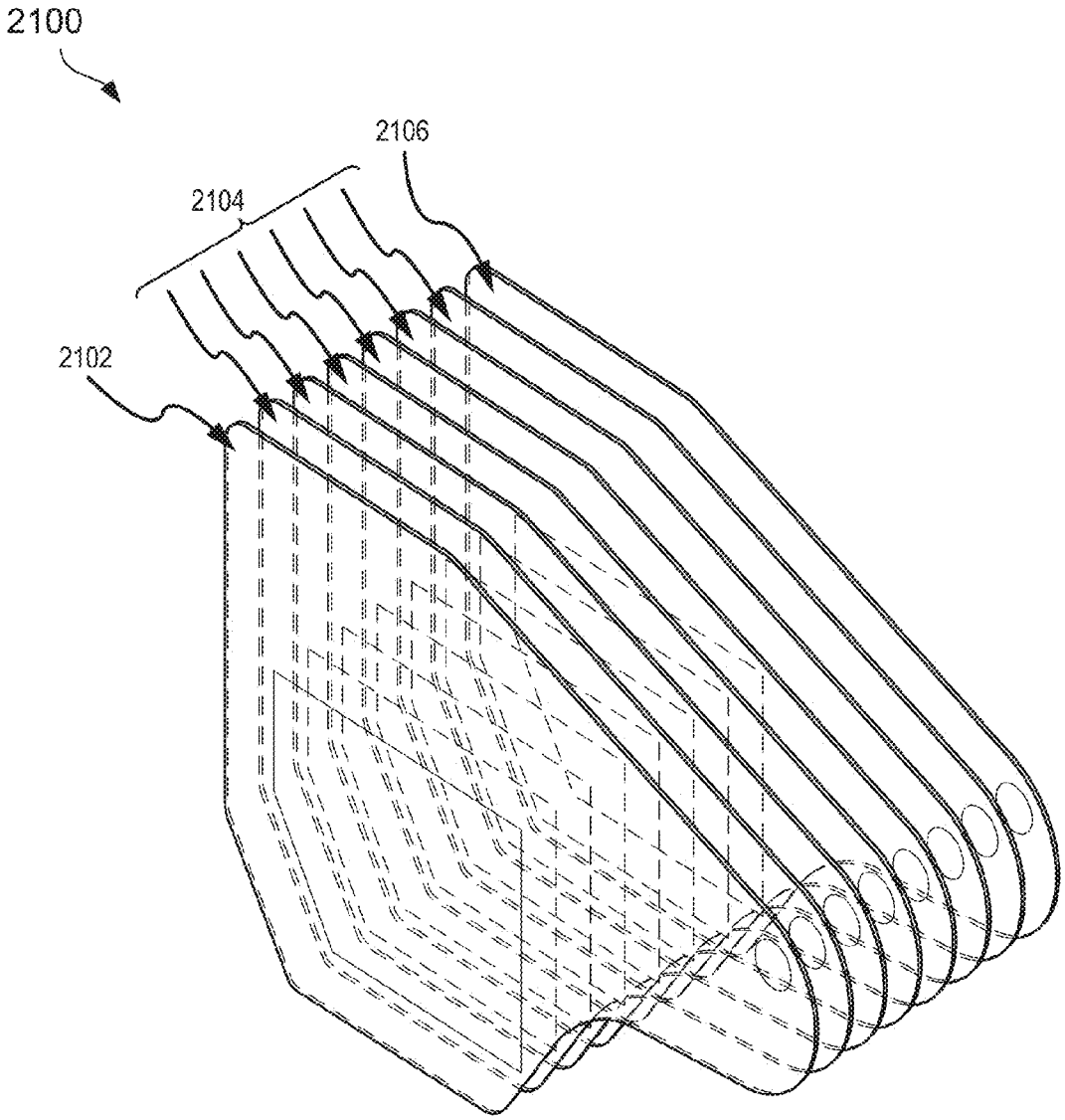

FIG. 21

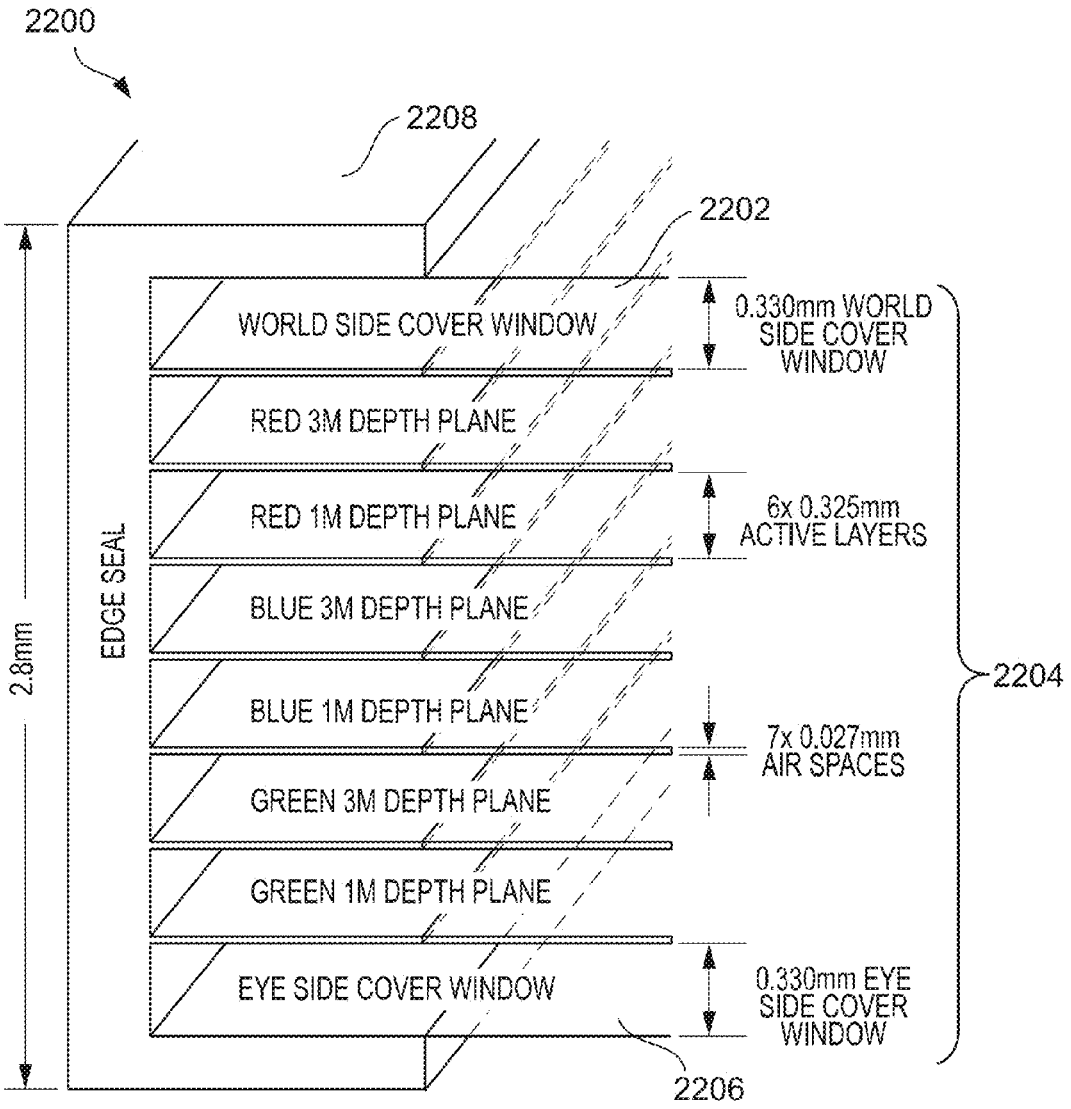
2200
2208
2202
WORLD SIDE COVER WINDOW
0.330mm WORLD SIDE COVER WINDOW
RED 3M DEPTH PLANE
RED 1M DEPTH PLANE
6x 0.325mm ACTIVE LAYERS
BLUE 3M DEPTH PLANE
BLUE 1M DEPTH PLANE
7x 0.027mm AIR SPACES
GREEN 3M DEPTH PLANE
GREEN 1M DEPTH PLANE
EYE SIDE COVER WINDOW
0.330mm EYE SIDE COVER WINDOW
2.8mm
EDGE SEAL
2204
2206

FIG. 22

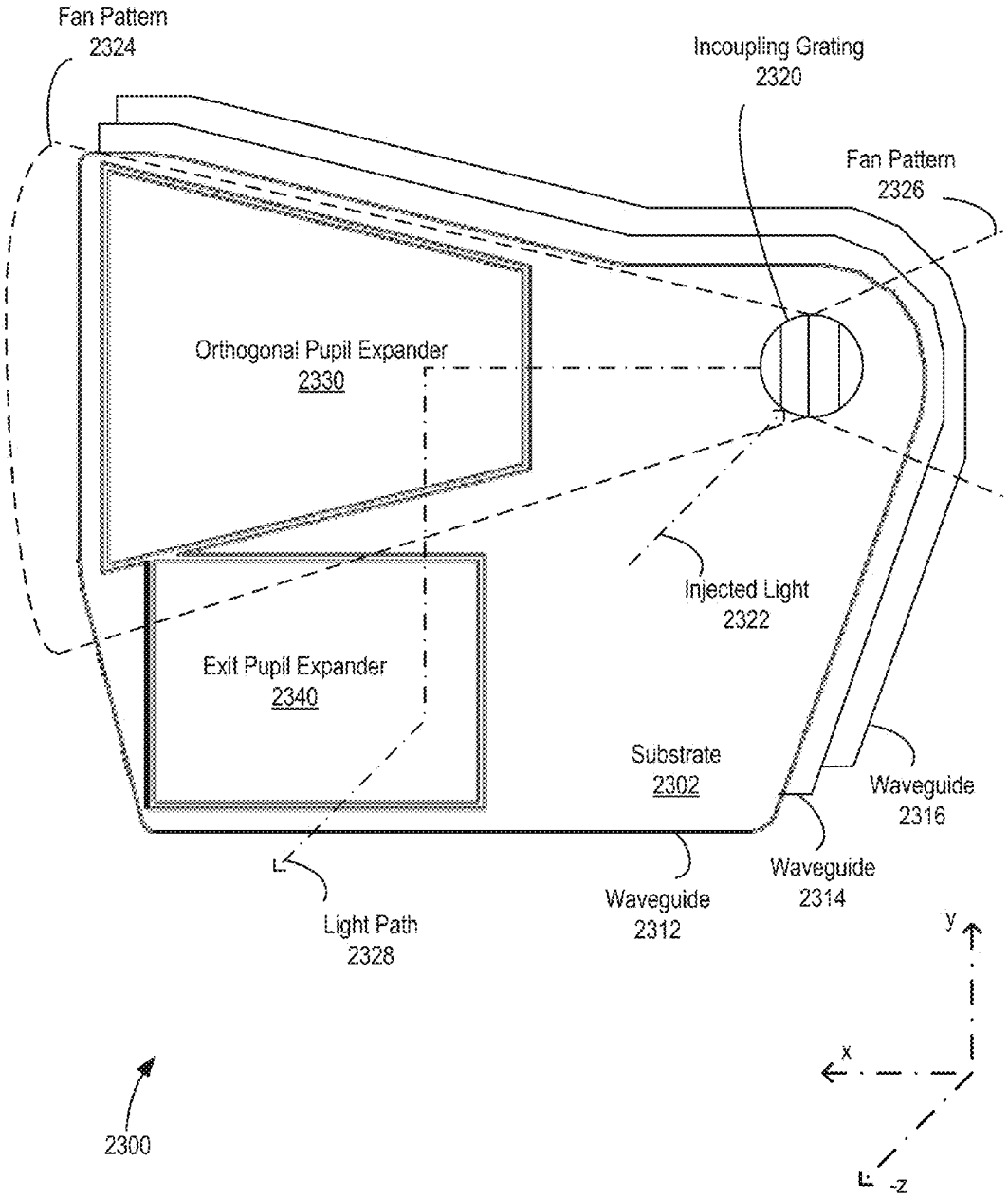
Fan Pattern
2324
Incoupling Grating
2320
Fan Pattern
2326
Orthogonal Pupil Expander
2330
Injected Light
2322
Exit Pupil Expander
2340
Substrate
2302
Waveguide
2316
Waveguide
2314
Waveguide
2312
Light Path
2328
y
x
-z
2300

FIG. 23

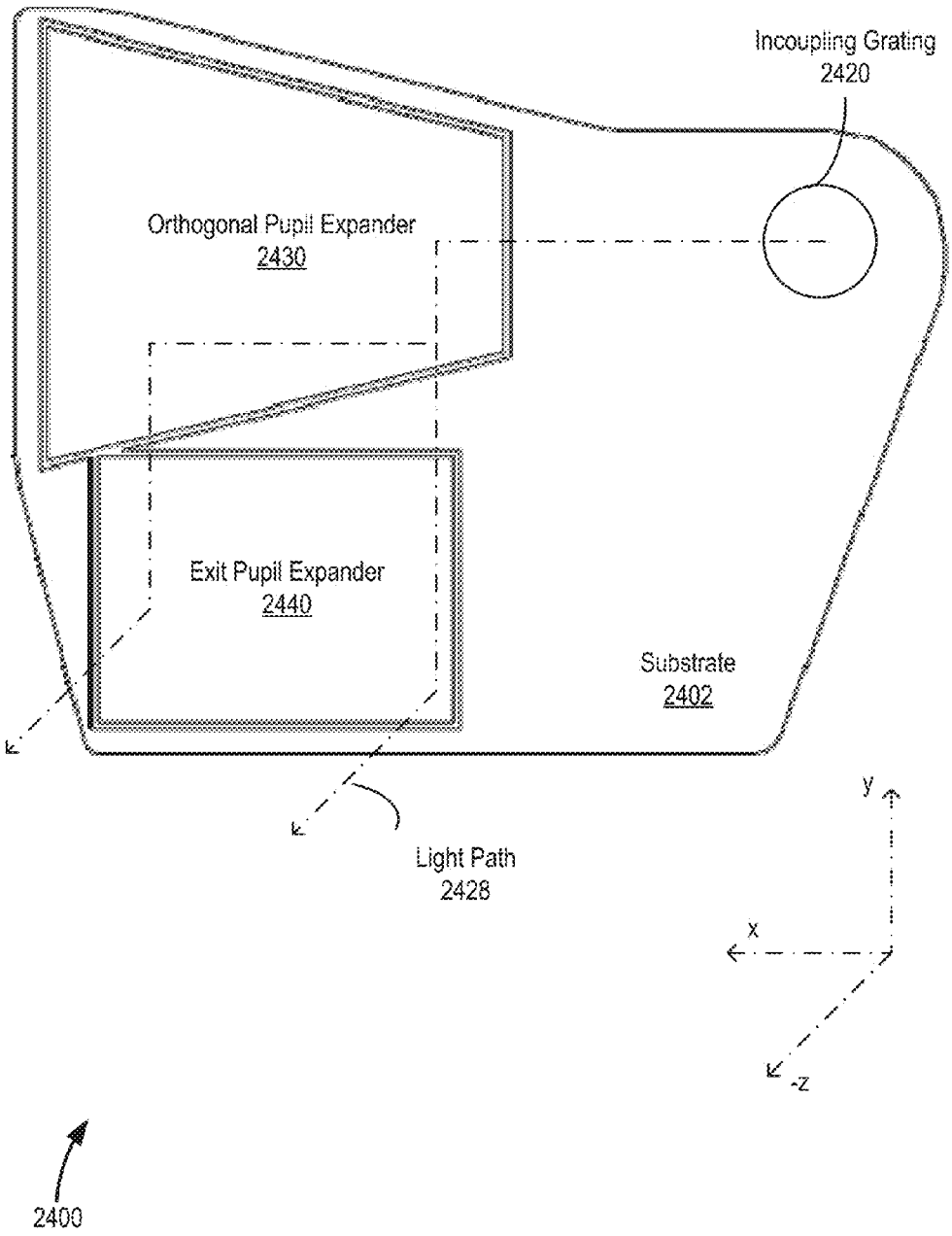
Incoupling Grating
2420
Orthogonal Pupil Expander
2430
Exit Pupil Expander
2440
Substrate
2402
Light Path
2428
y
x
-z
2400

FIG. 24

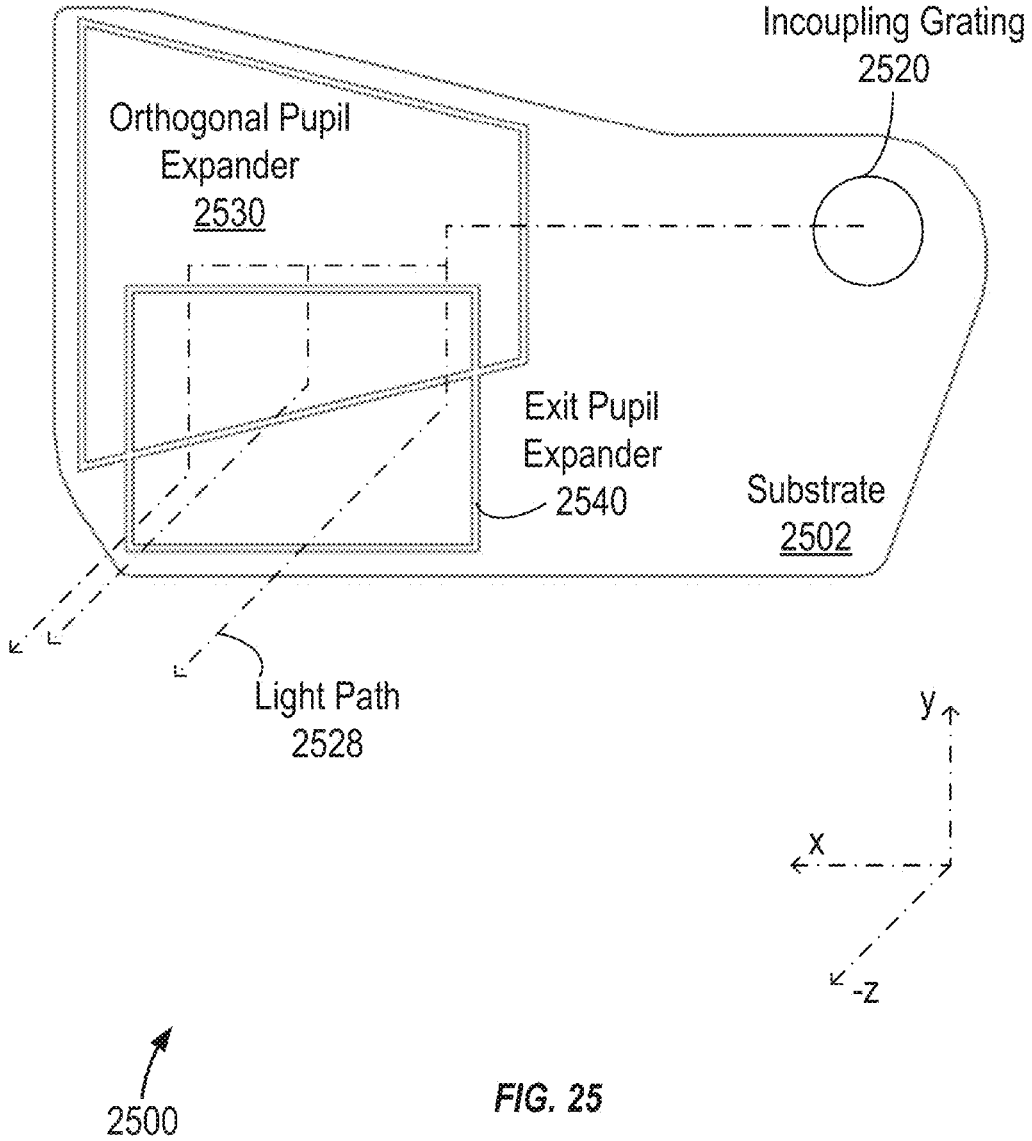
Incoupling Grating
2520
Orthogonal Pupil
Expander
2530
Exit Pupil
Expander
2540
Substrate
2502
Light Path
2528
y
x
-z
2500

FIG. 25

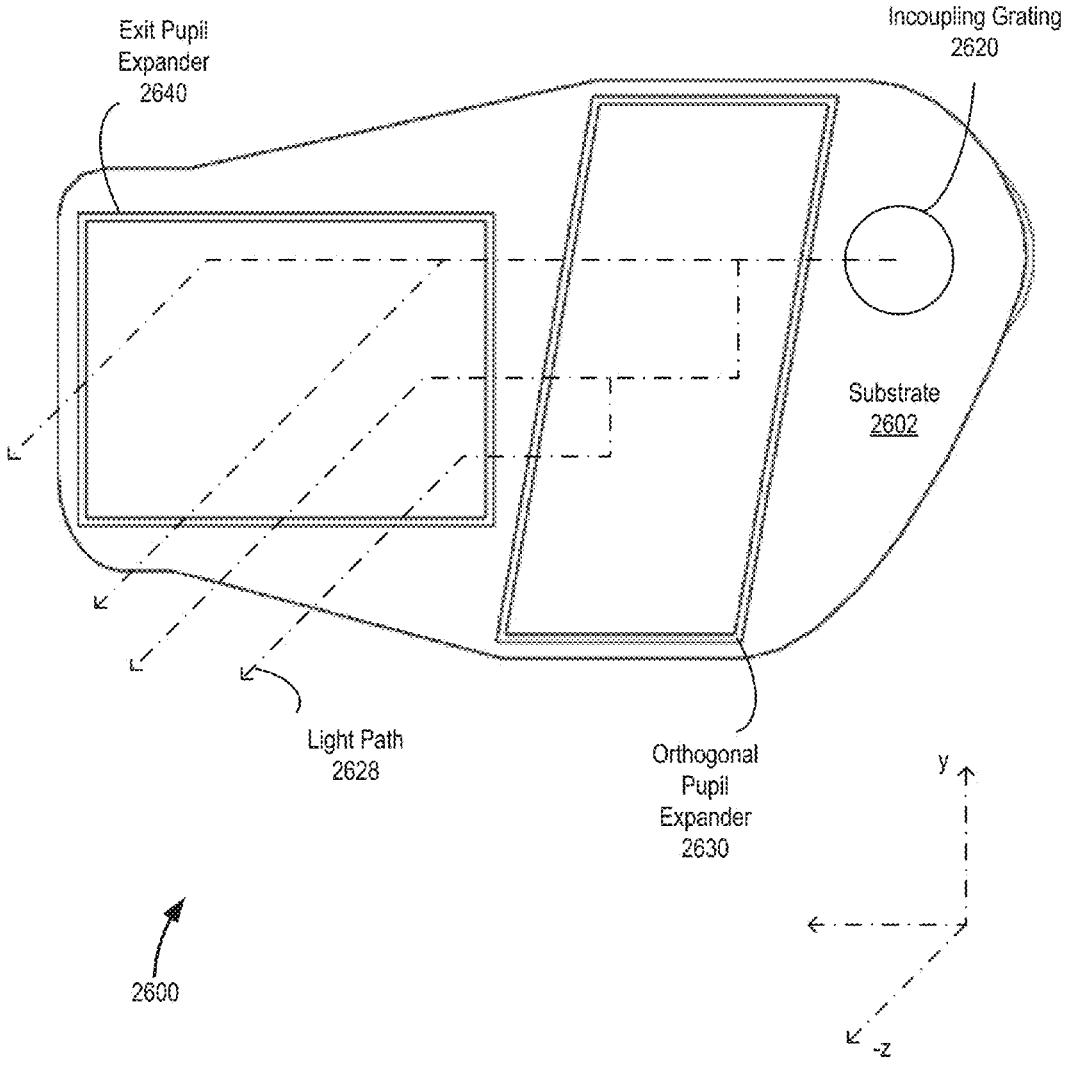
Exit Pupil
Expander
2640
Incoupling Grating
2620
Substrate
2602
Light Path
2628
Orthogonal
Pupil
Expander
2630
y
-z
2600

FIG. 26

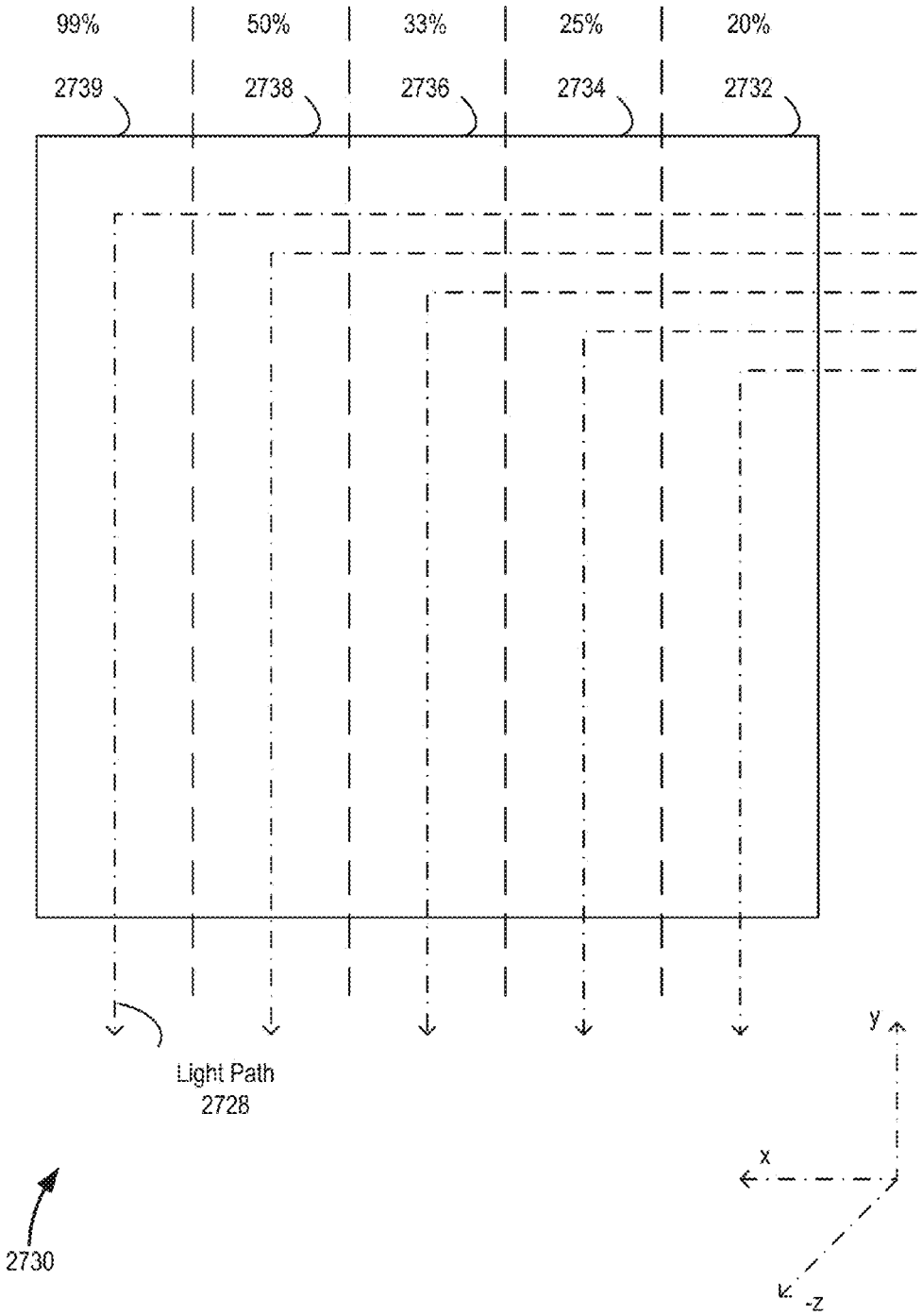
99%
50%
33%
25%
20%
2739
2738
2736
2734
2732
Light Path
2728
y
x
-z
2730

FIG. 27

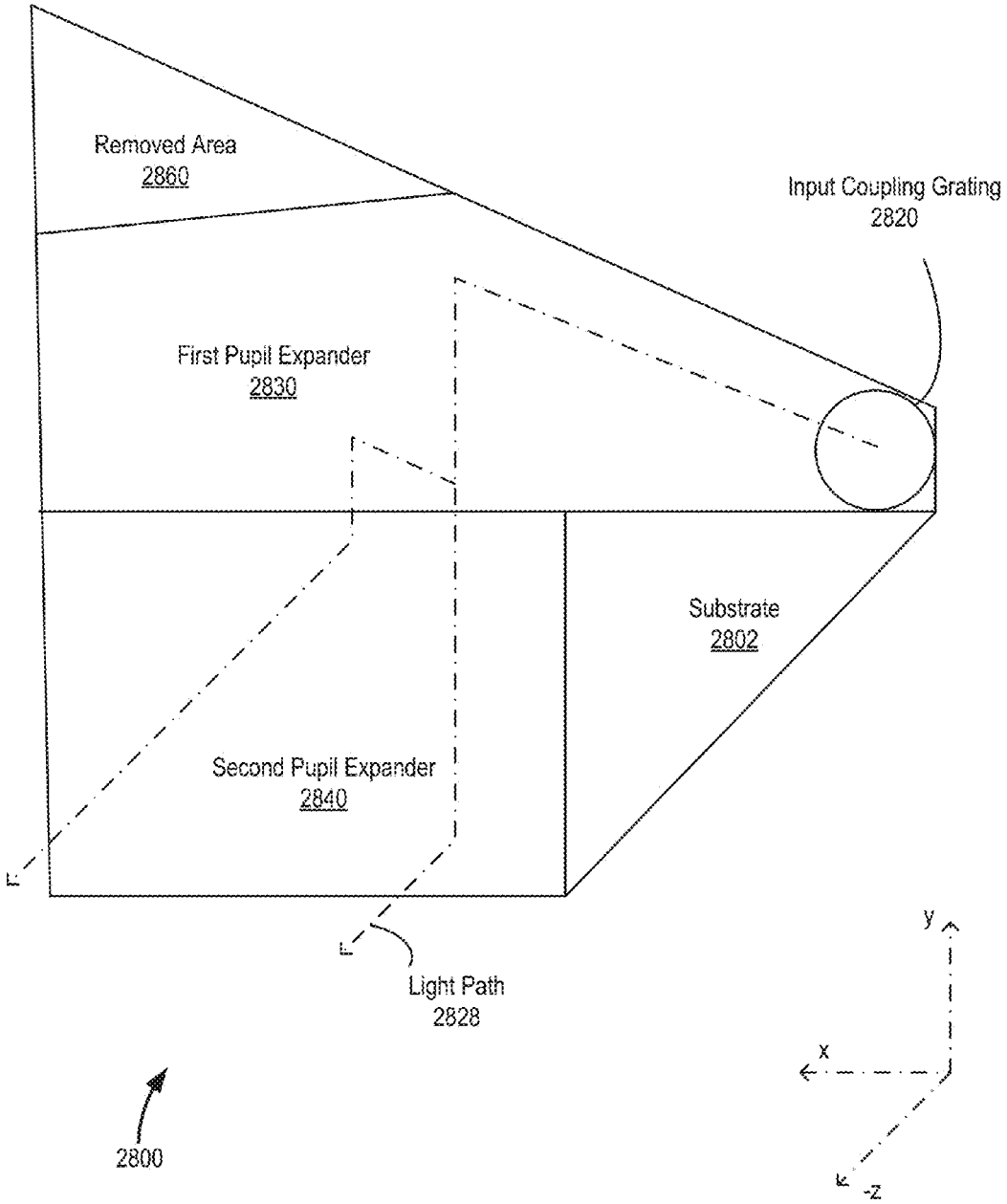
Removed Area
2860
Input Coupling Grating
2820
First Pupil Expander
2830
Substrate
2802
Second Pupil Expander
2840
Light Path
2828
2800
y
x
-z

FIG. 28

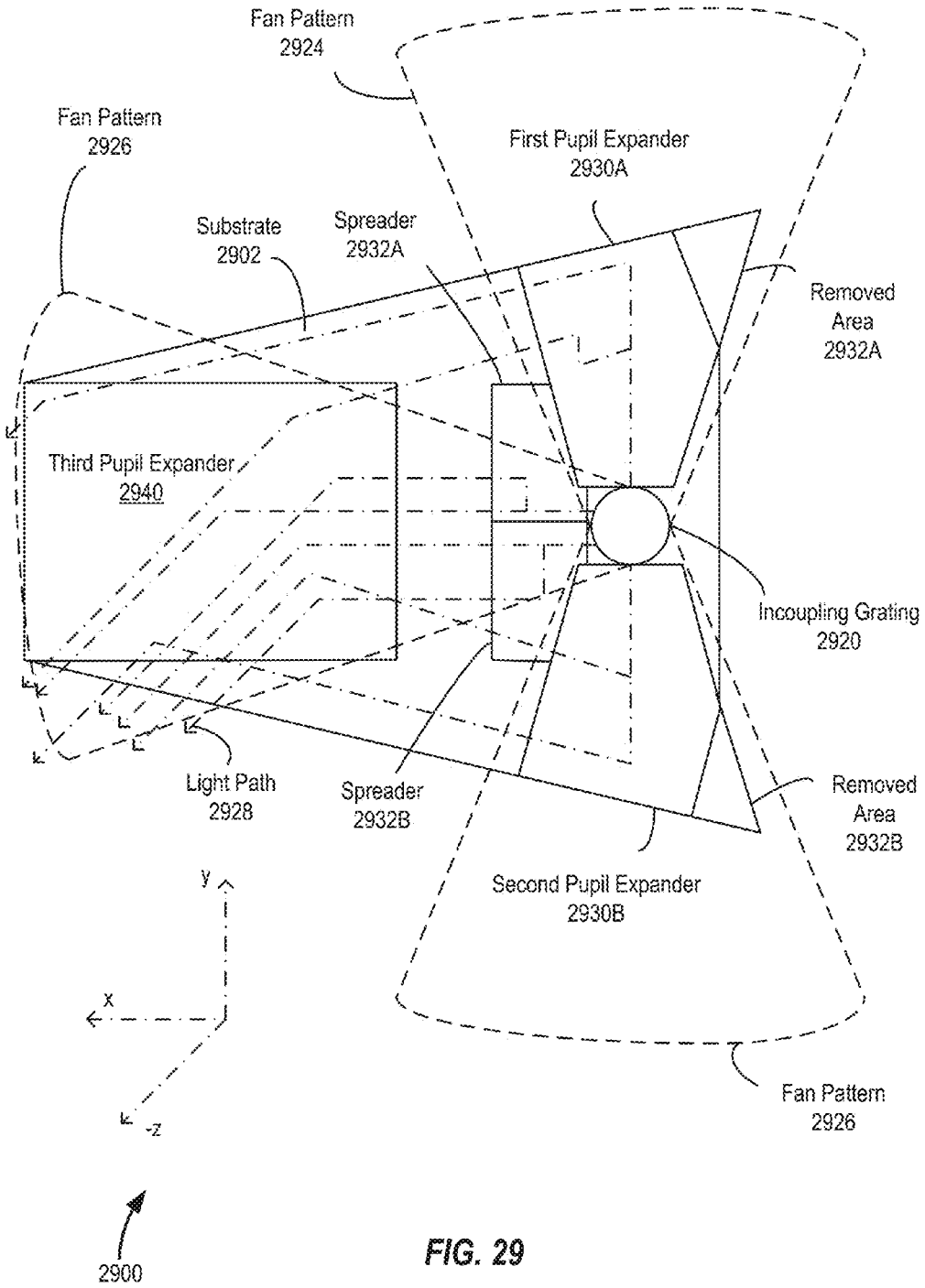
Fan Pattern
2924
Fan Pattern
2926
First Pupil Expander
2930A
Substrate
2902
Spreader
2932A
Removed
Area
2932A
Third Pupil Expander
2940
Incoupling Grating
2920
Light Path
2928
Spreader
2932B
Removed
Area
2932B
Second Pupil Expander
2930B
y
x
-z
Fan Pattern
2926
2900

FIG. 29

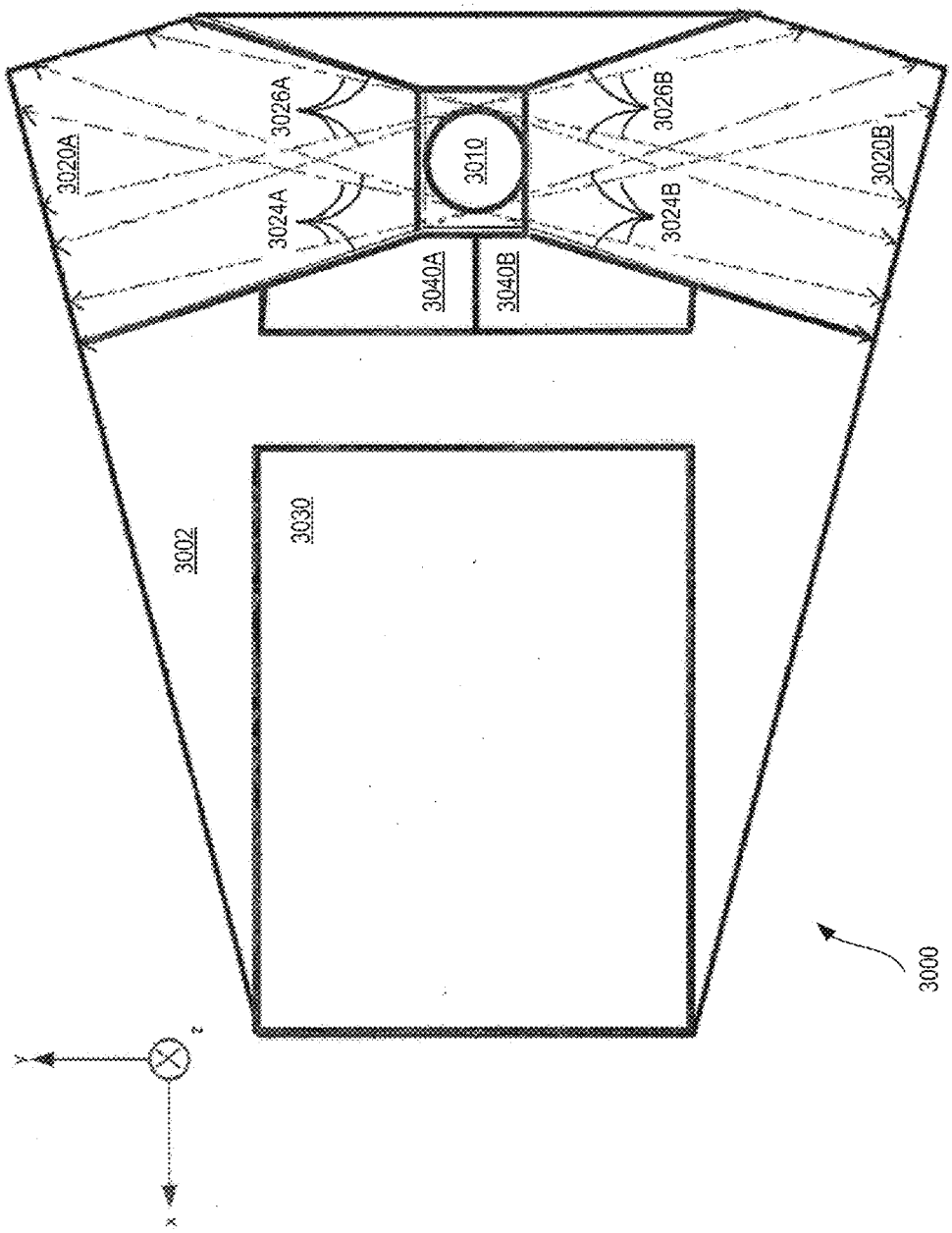
3020A
3026A
3024A
3010
3026B
3024B
3020B
3040A
3040B
3002
3030
3000
Y
Z
X

FIG. 30A

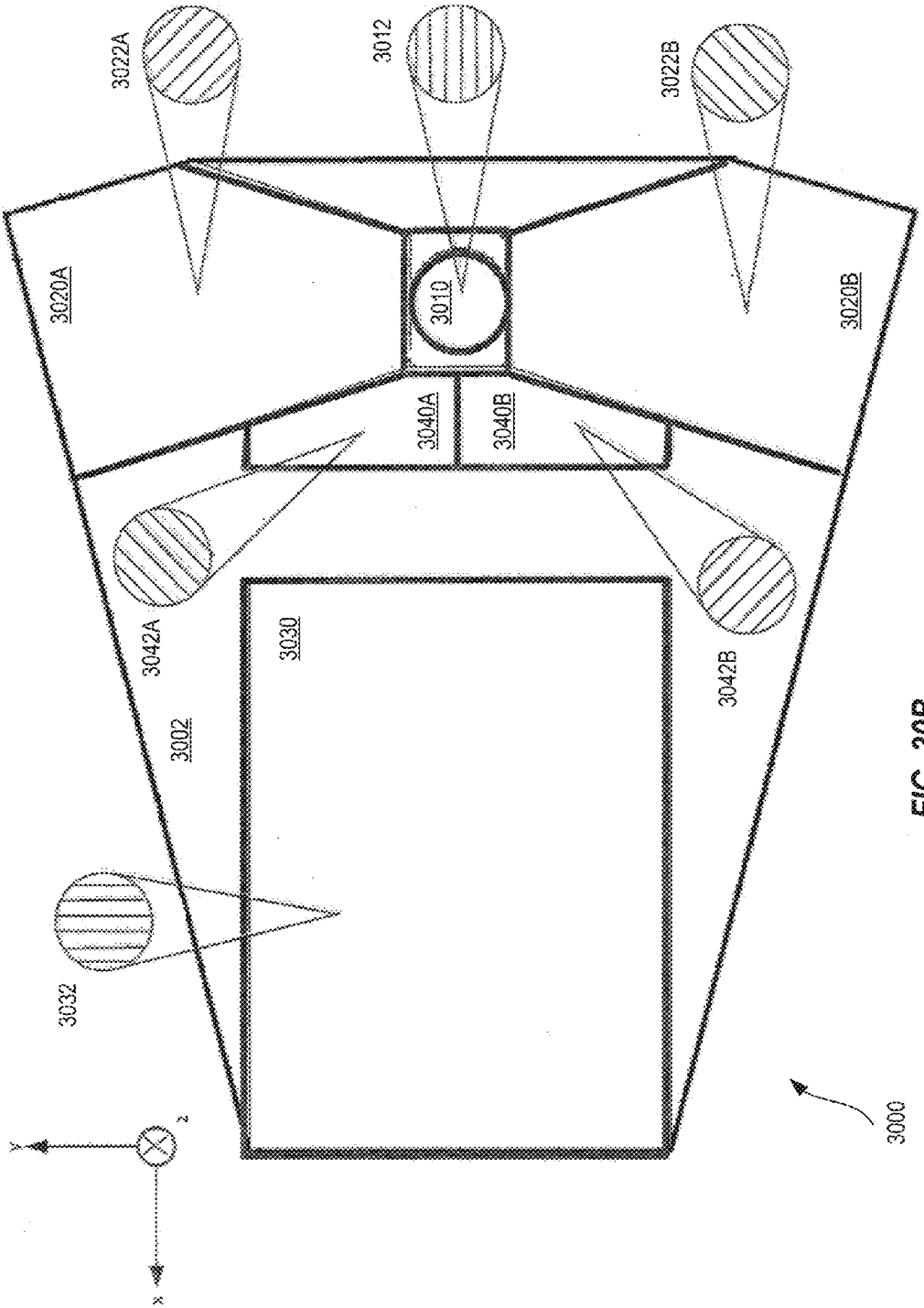
3022A
3012
3022B
3020A
3010
3020B
3040A
3040B
3042A
3042B
3030
3002
3032
3000
y
z
x

FIG. 30B

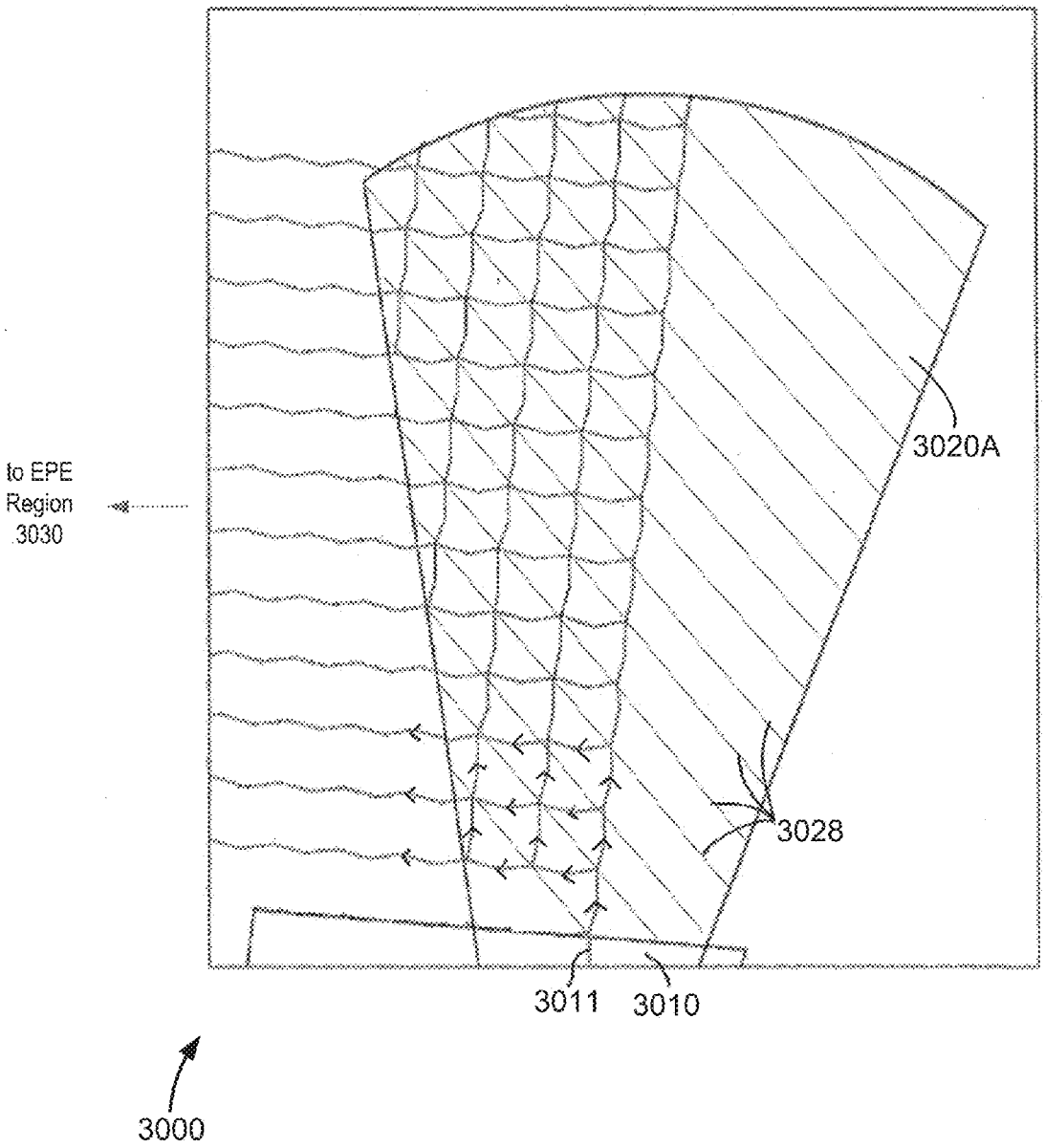

FIG. 30C

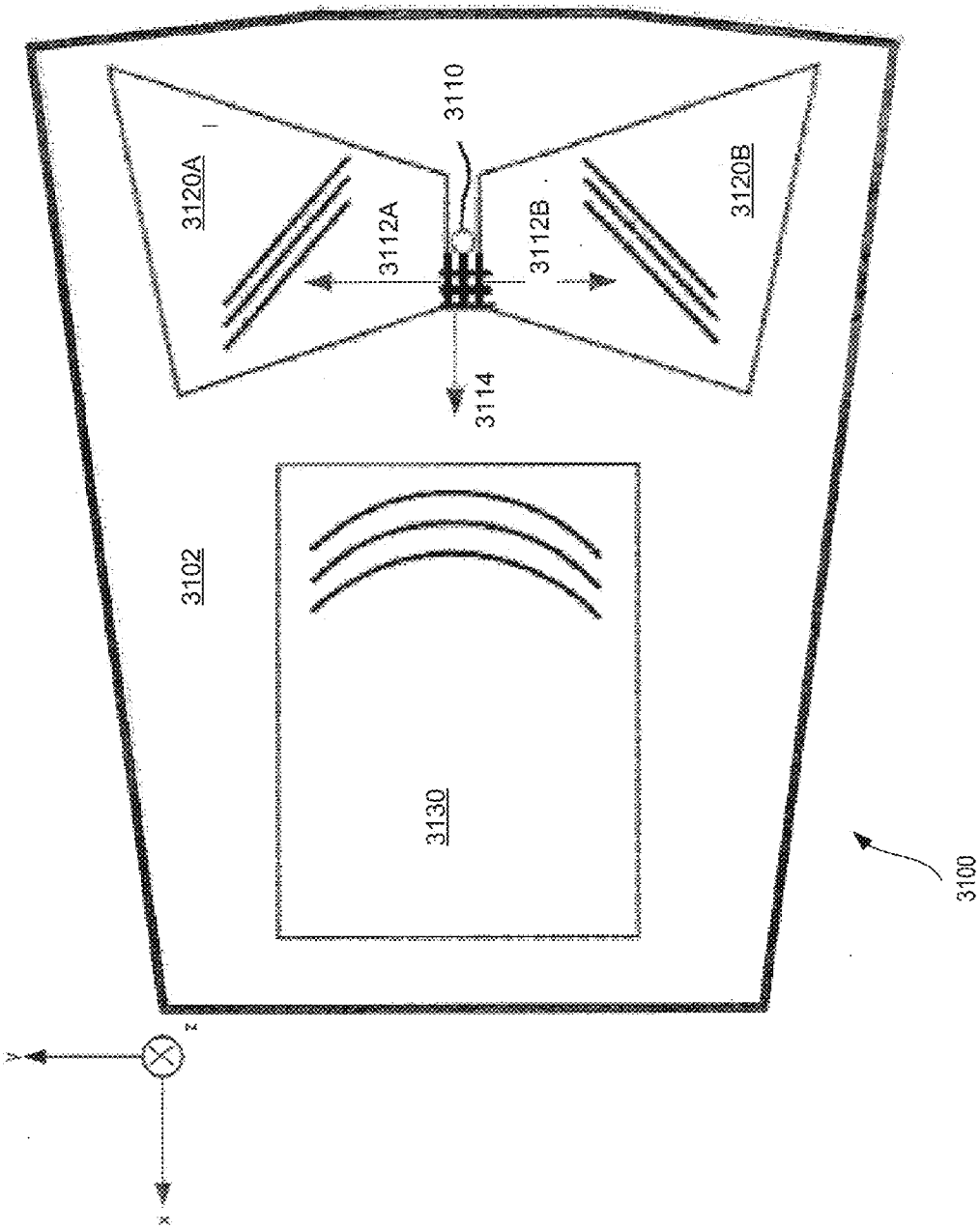

FIG. 31A

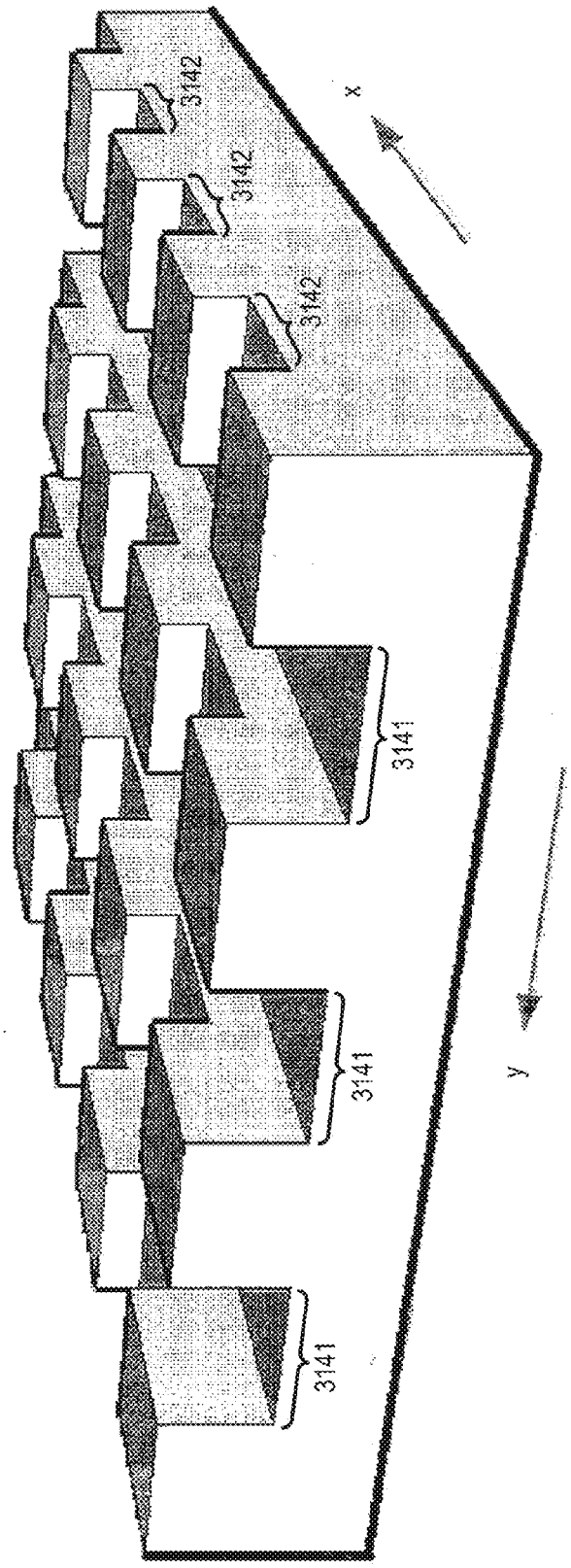

FIG. 31B

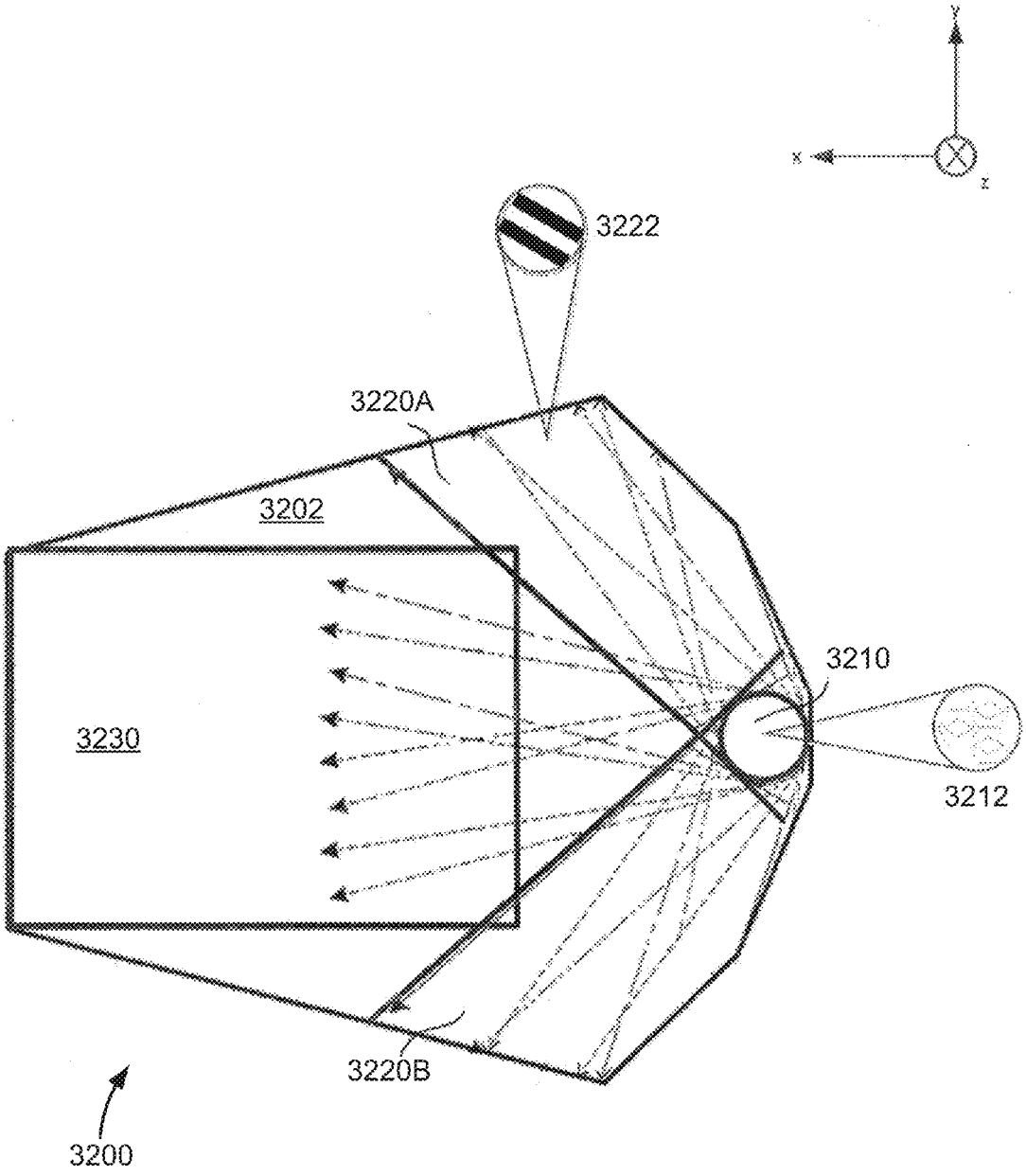

FIG. 32A

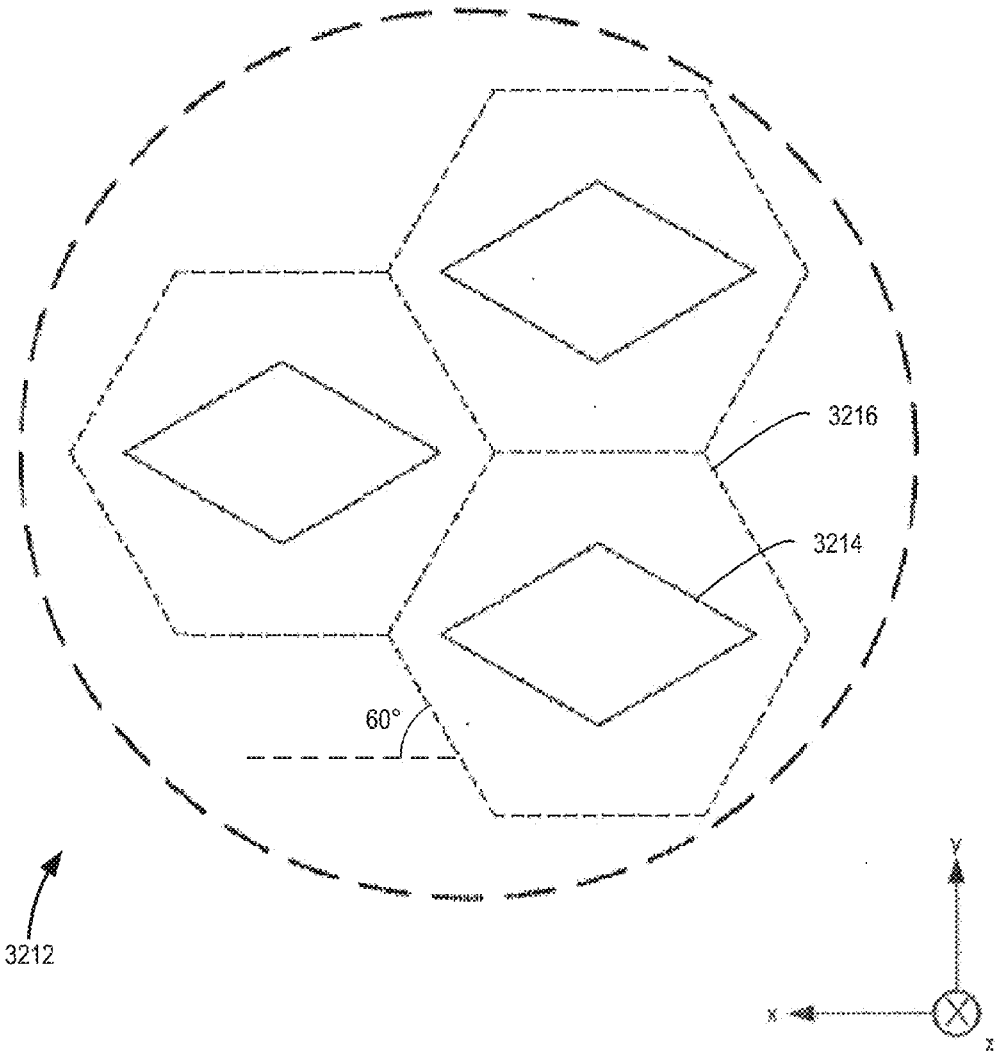

FIG. 32B

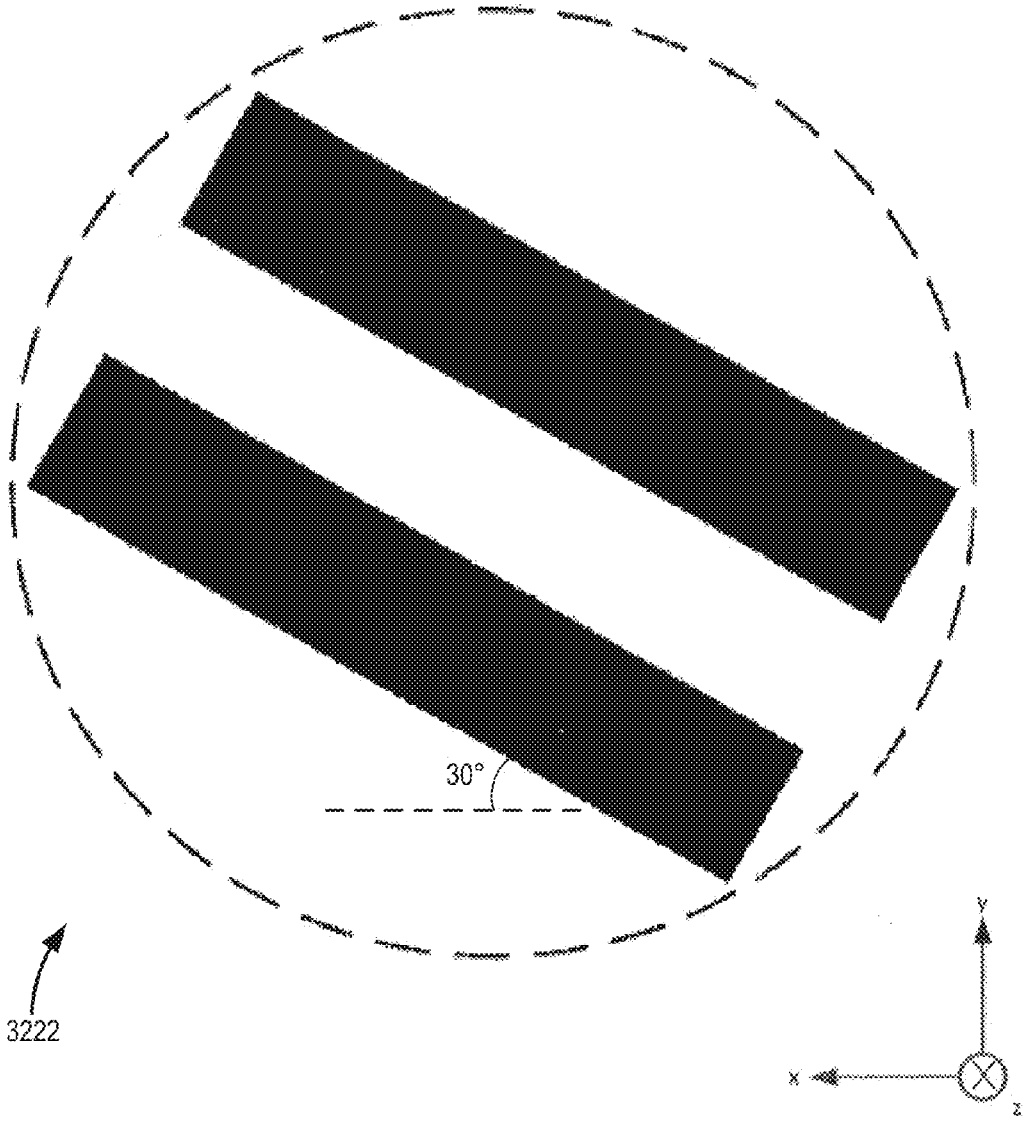

FIG. 32C

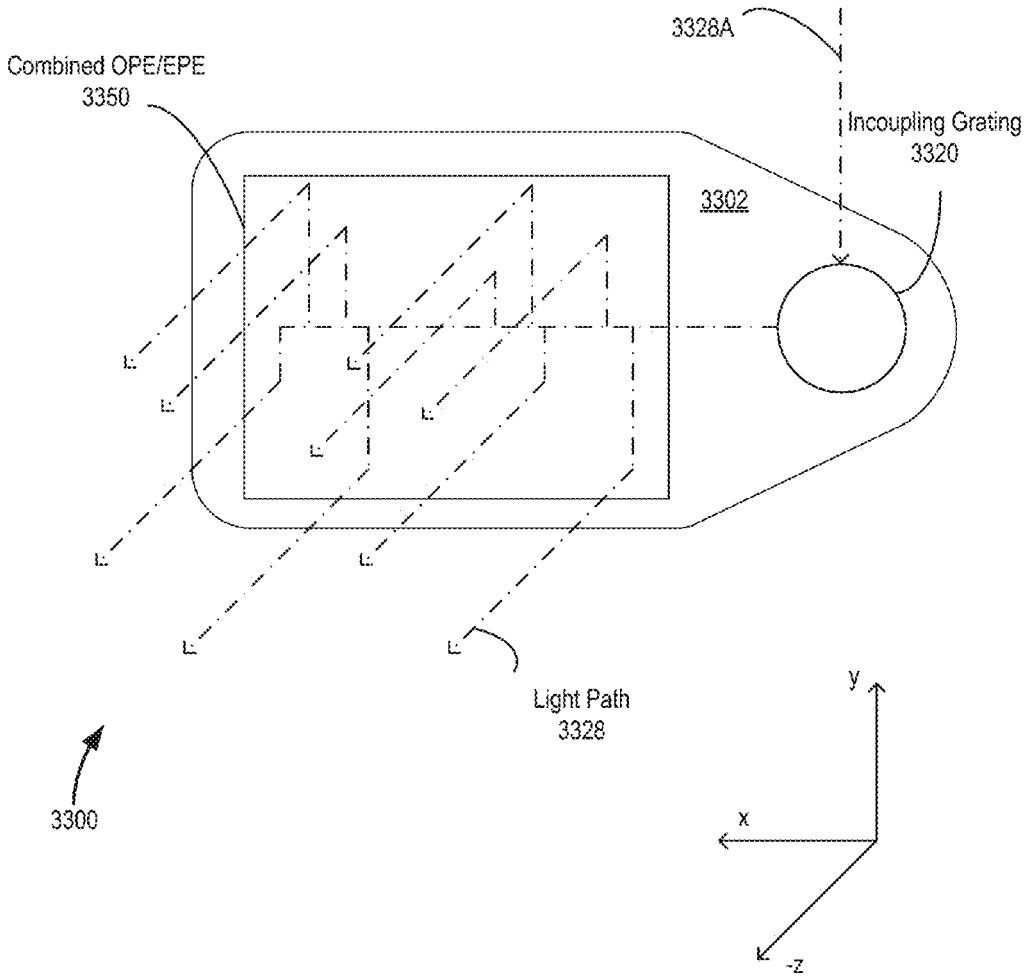
3328A
Combined OPE/EPE
3350
Incoupling Grating
3320
3302
Light Path
3328
3300
y
x
-z

FIG. 33A

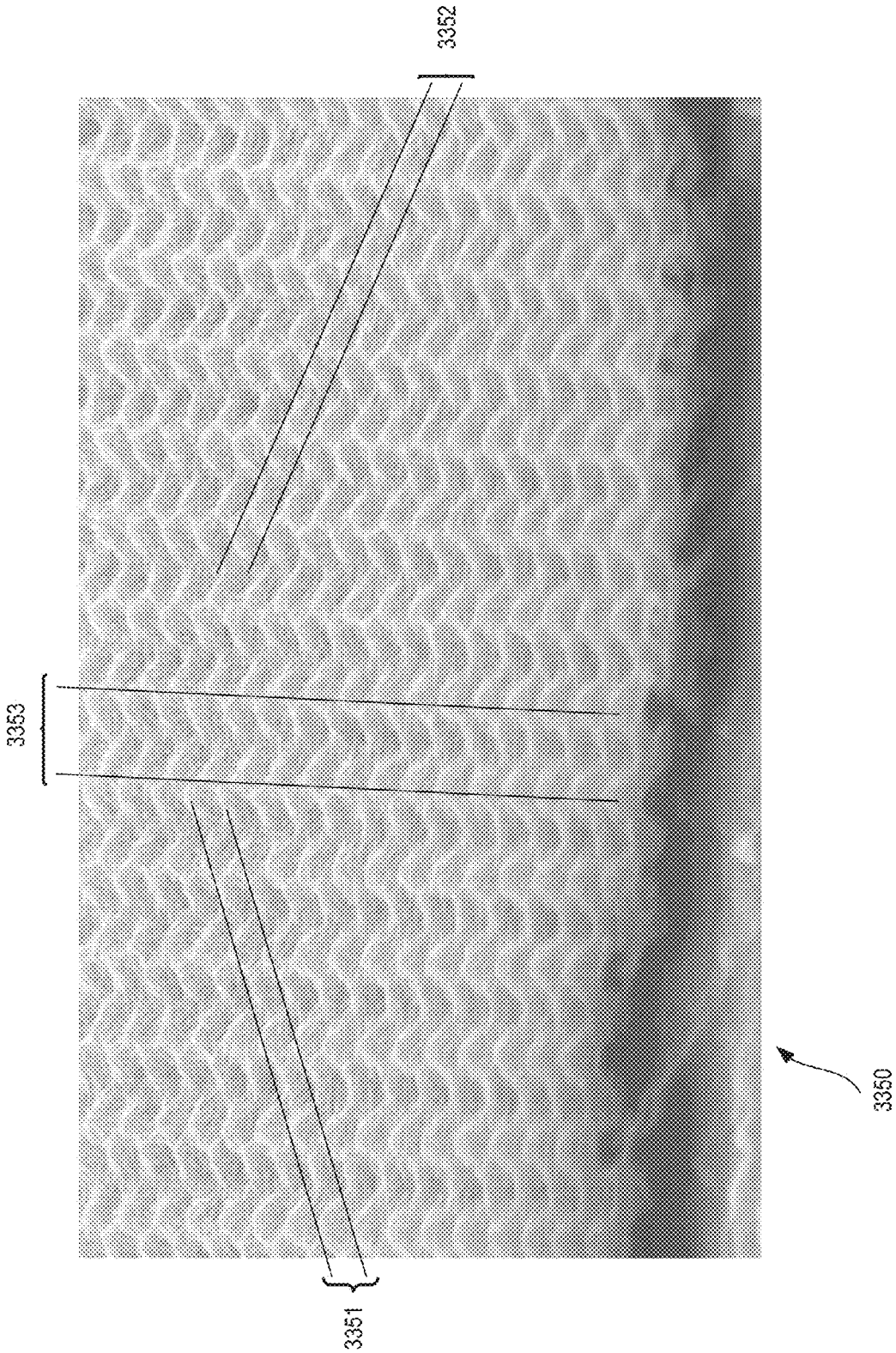

FIG. 33B

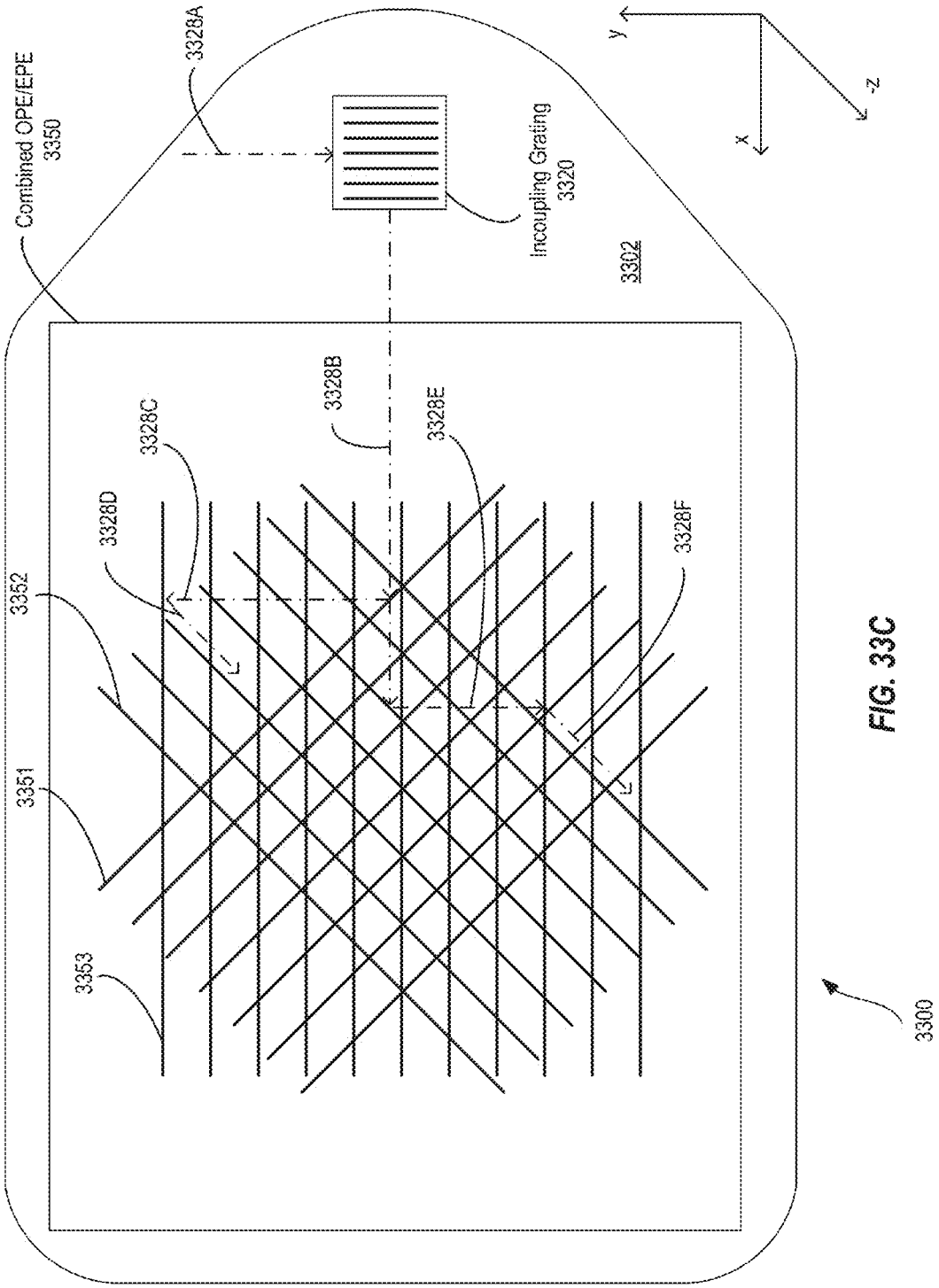
Combined OPE/EPE
3350
3328A
Incoupling Grating
3320
3302
y
x
-z
3328B
3328C
3328D
3328E
3328F
3352
3351
3353
3300

FIG. 33C

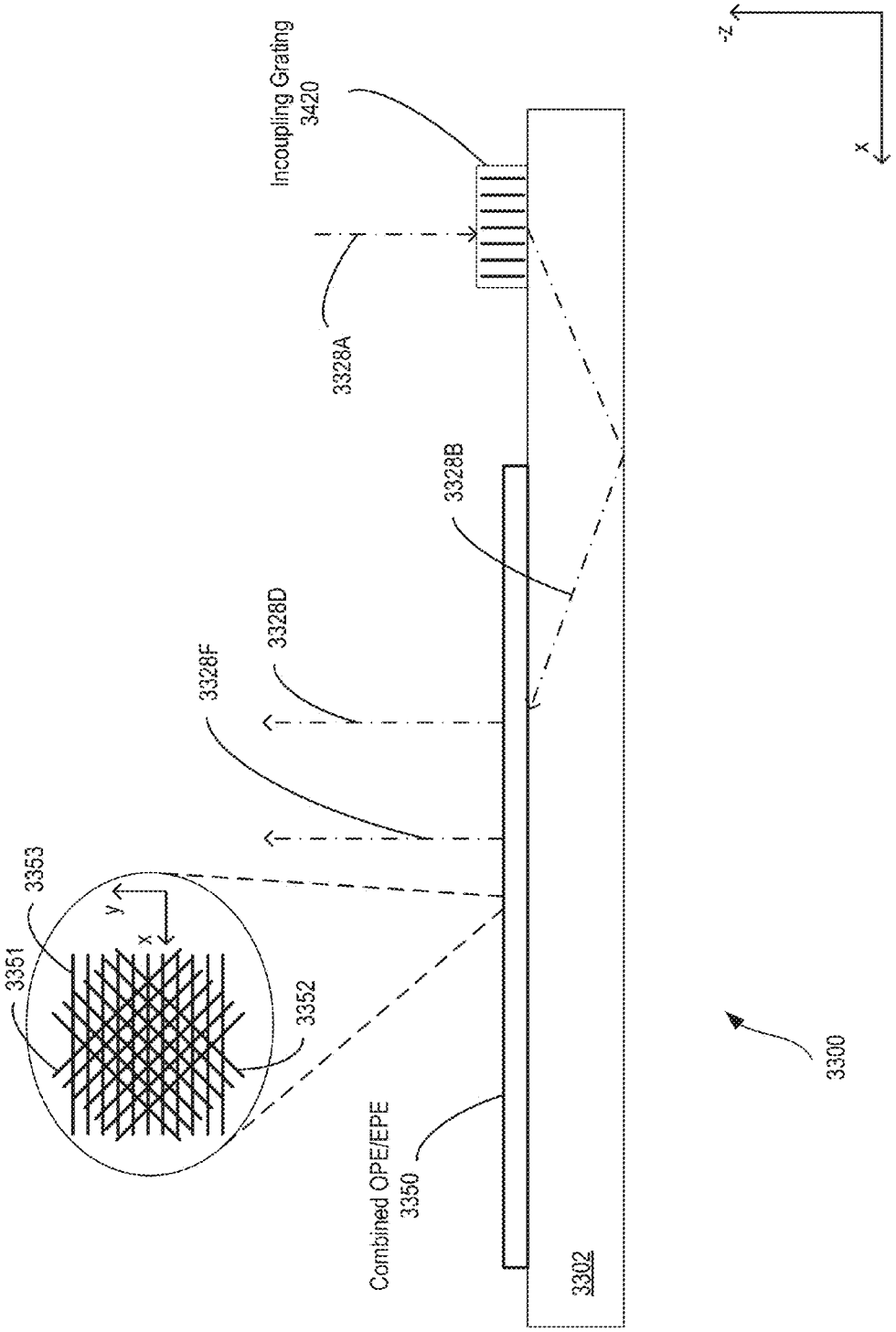
Incoupling Grating
3420
3328A
3328B
3328D
3328F
3353
3351
3352
y
x
Combined OPE/EPE
3350
3302
3300
-z
x

FIG. 33D

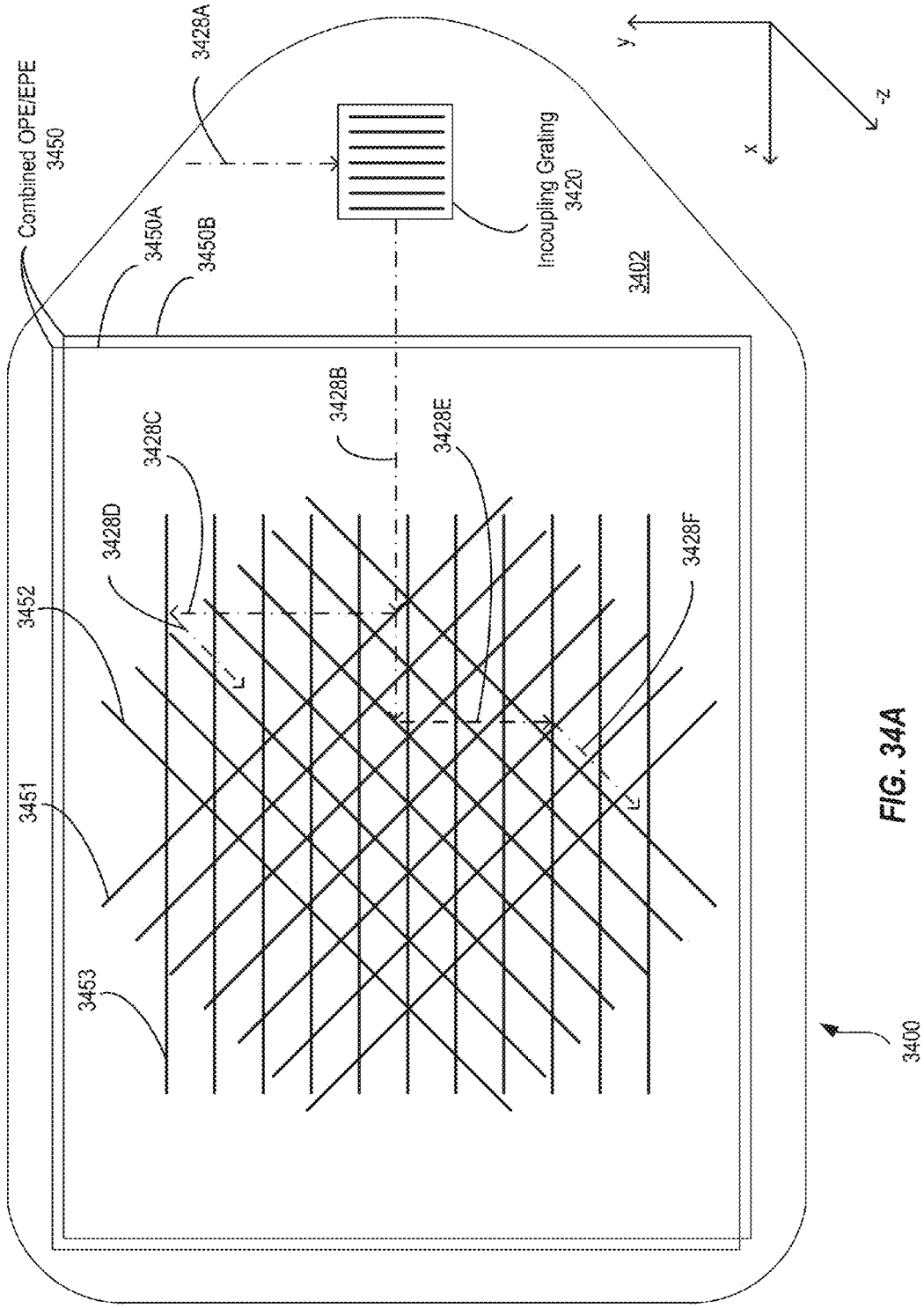
Combined OPE/EPE
3450
3450A
3450B
3428A
Incoupling Grating
3420
3402
y
x
-z
3428B
3428C
3428D
3428E
3428F
3452
3451
3453
3400

FIG. 34A

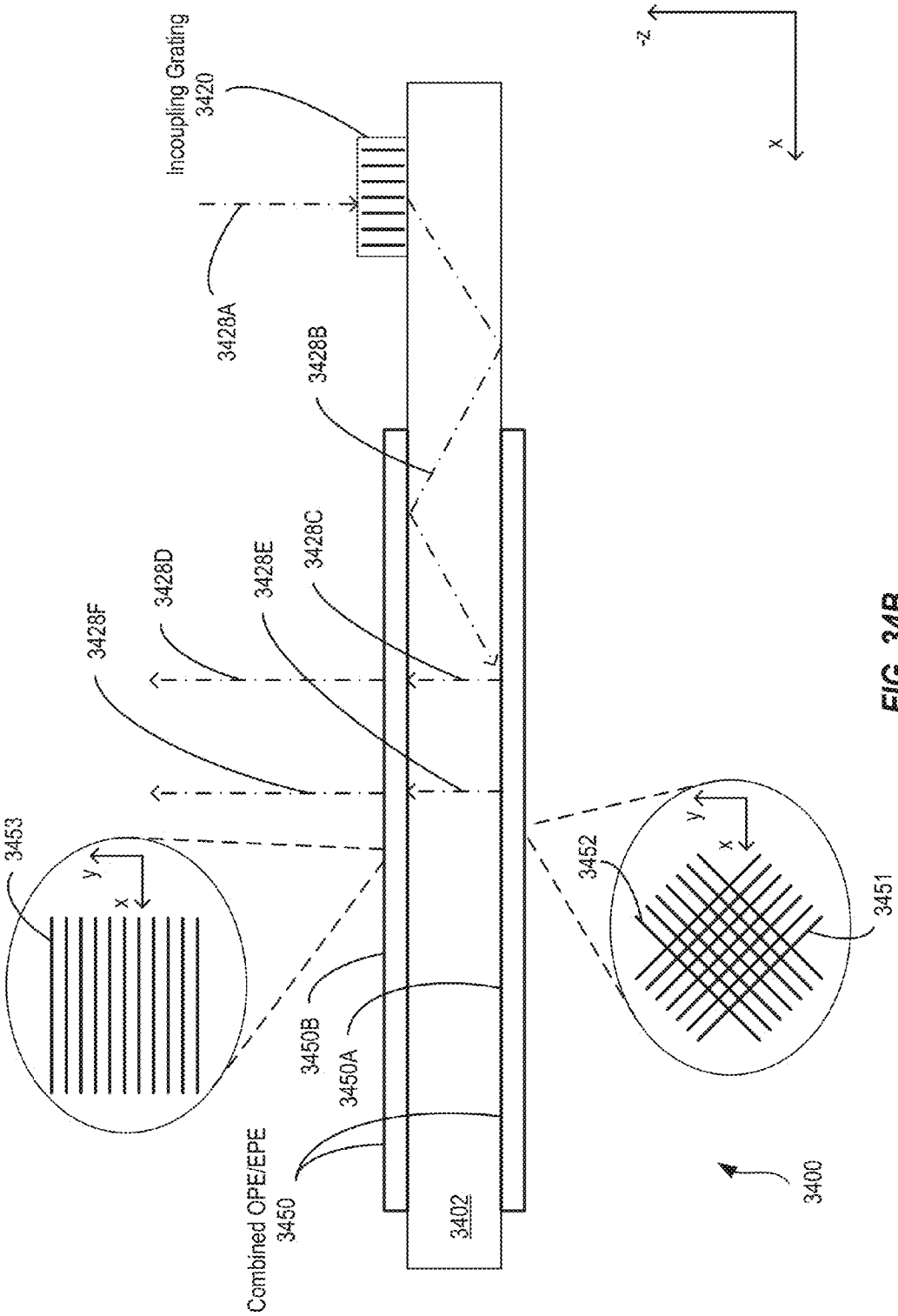
Incoupling Grating
3420
3428A
3428B
3428C
3428D
3428E
3428F
3453
y
x
3452
3451
3450B
3450A
Combined OPE/EPE
3450
3402
3400
-z
x

FIG. 34B

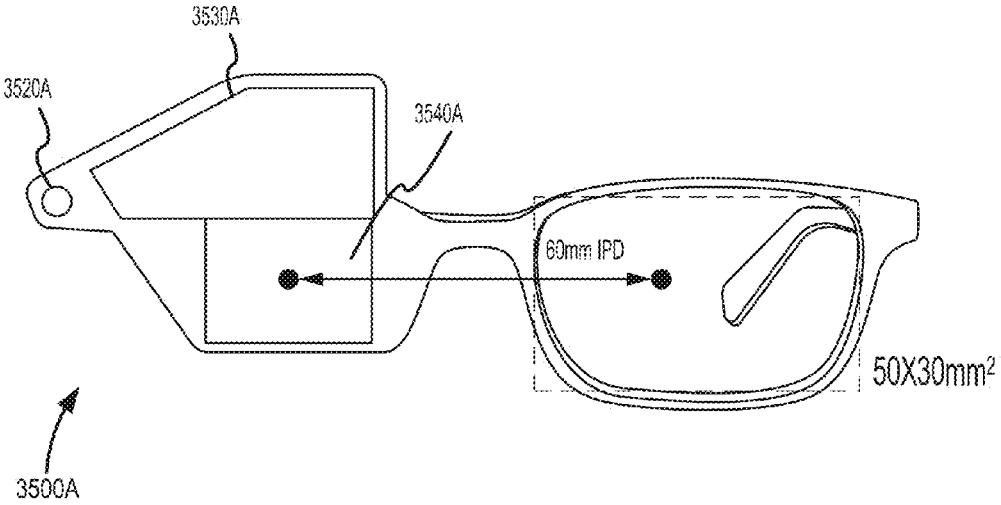

FIG. 35A

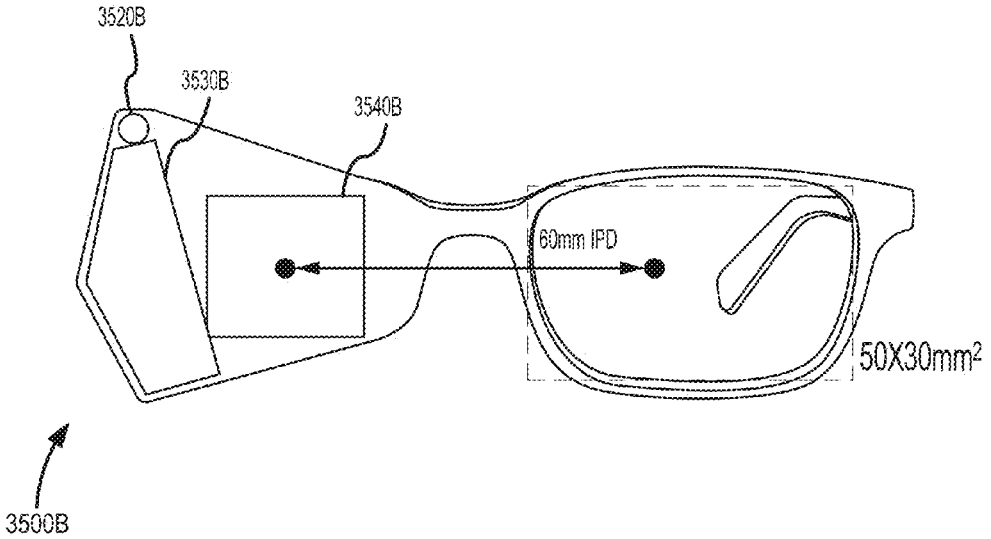

FIG. 35B

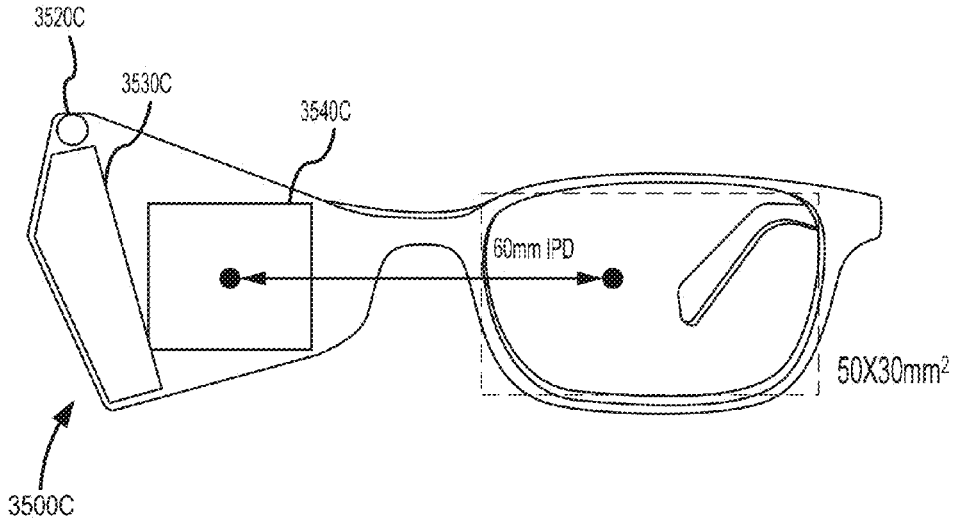

FIG. 35C

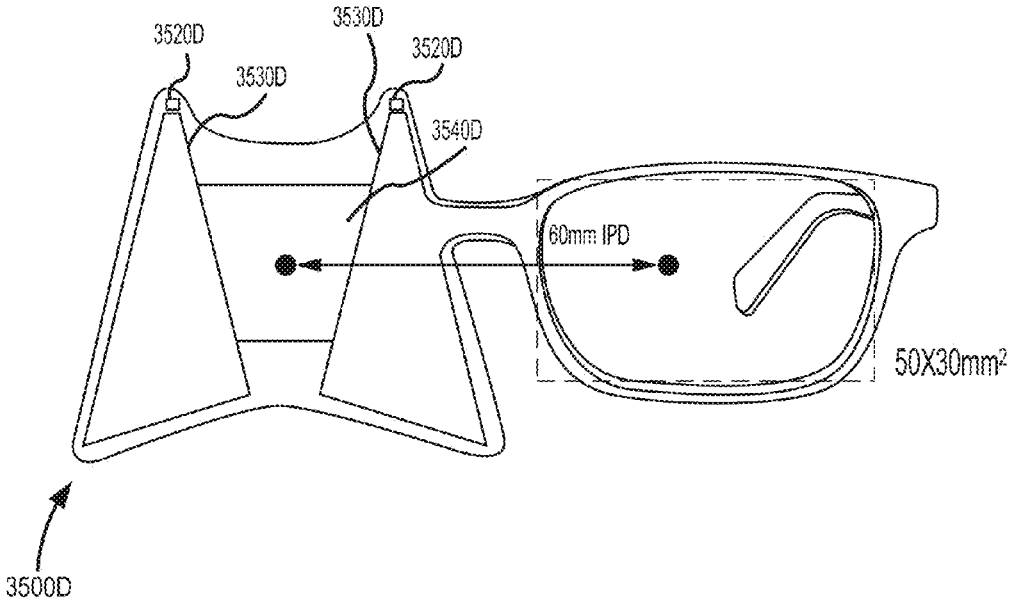

FIG. 35D

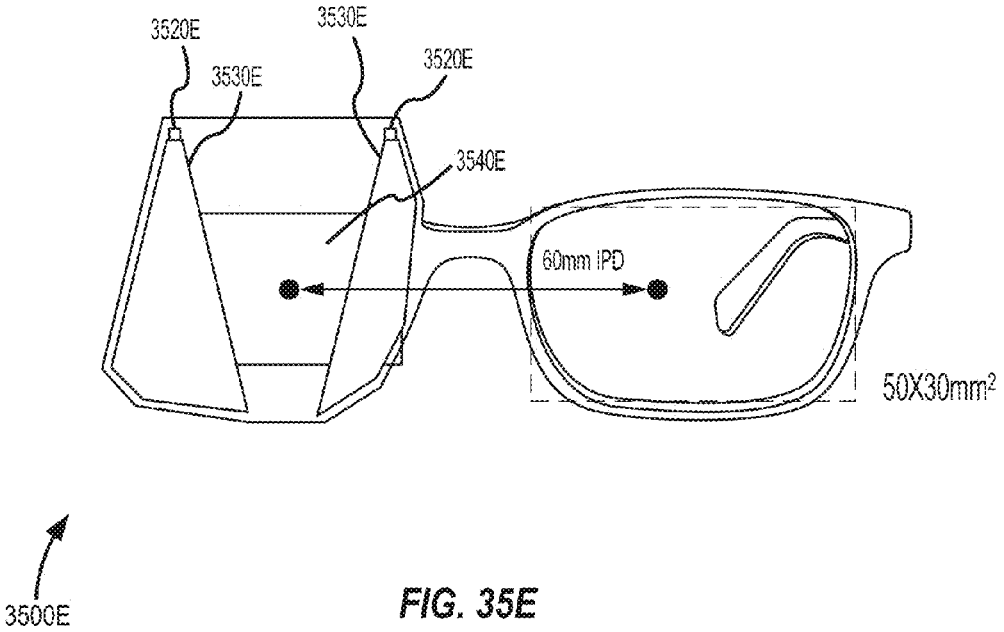

FIG. 35E

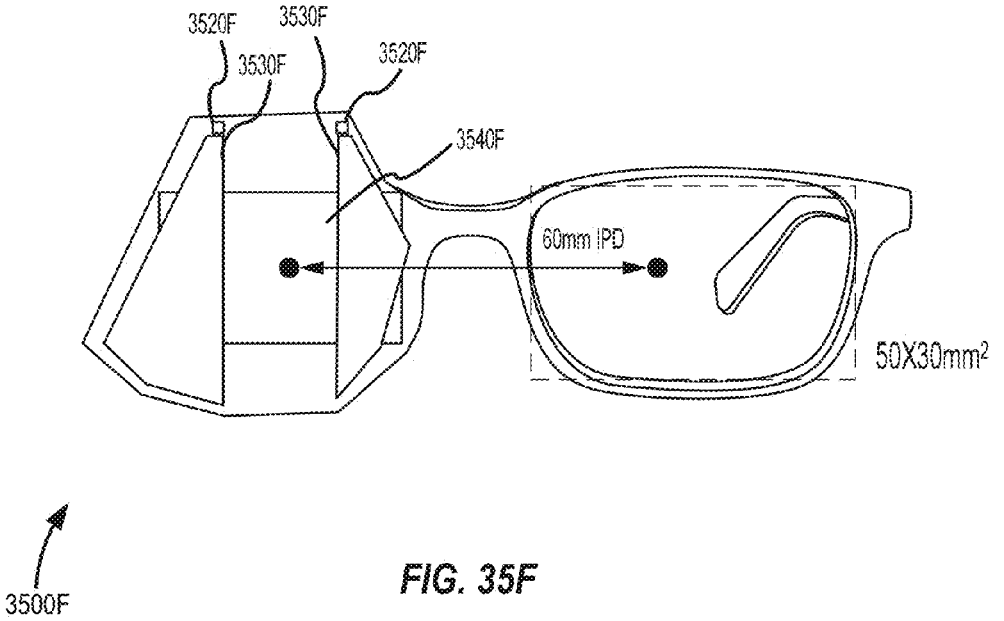

FIG. 35F

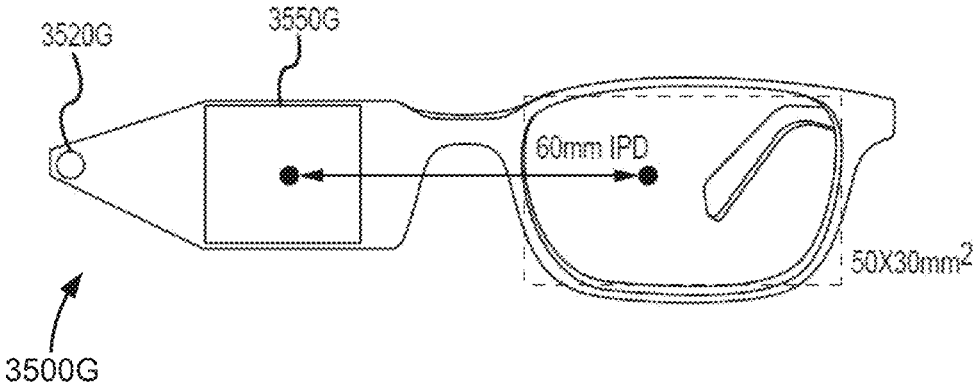

FIG. 35G

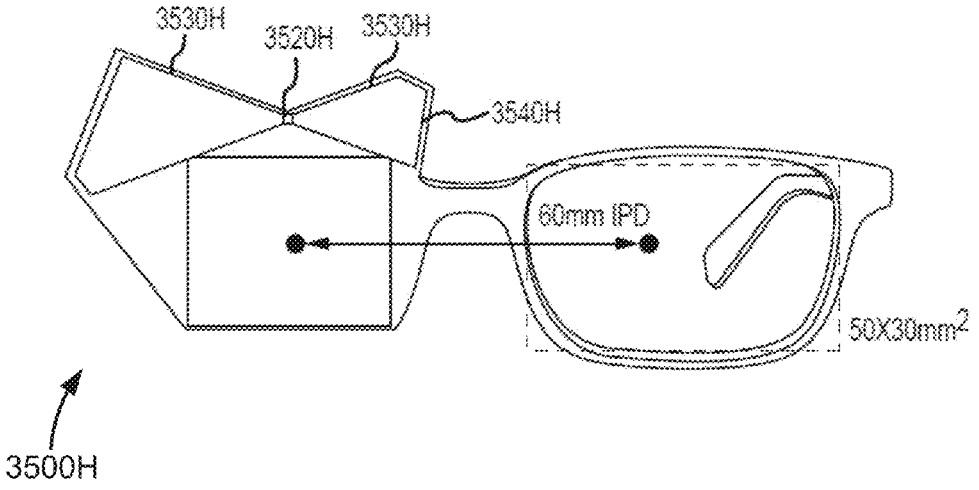

FIG. 35H

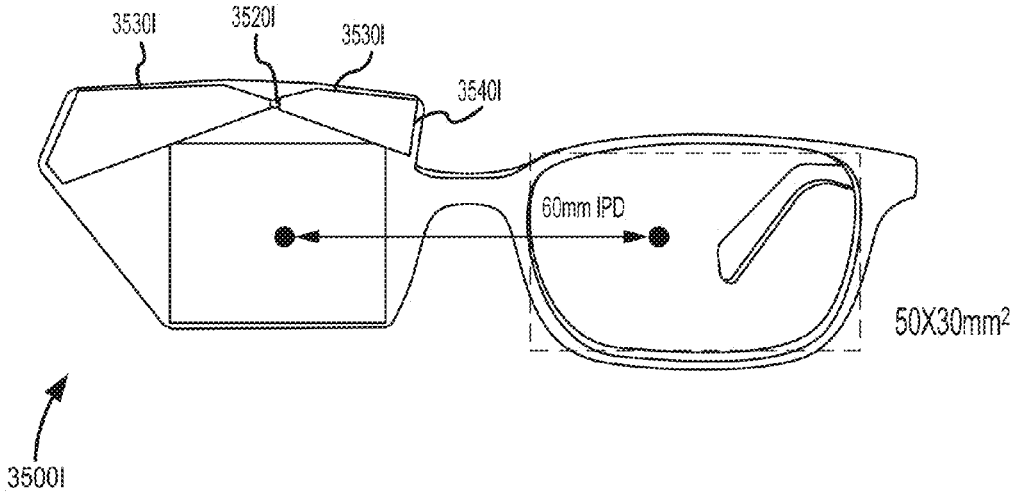

FIG. 35I

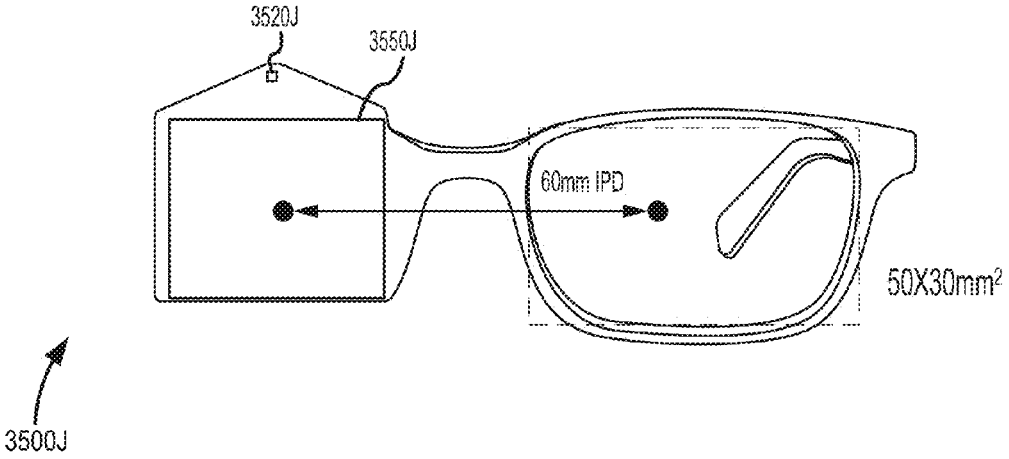

FIG. 35J

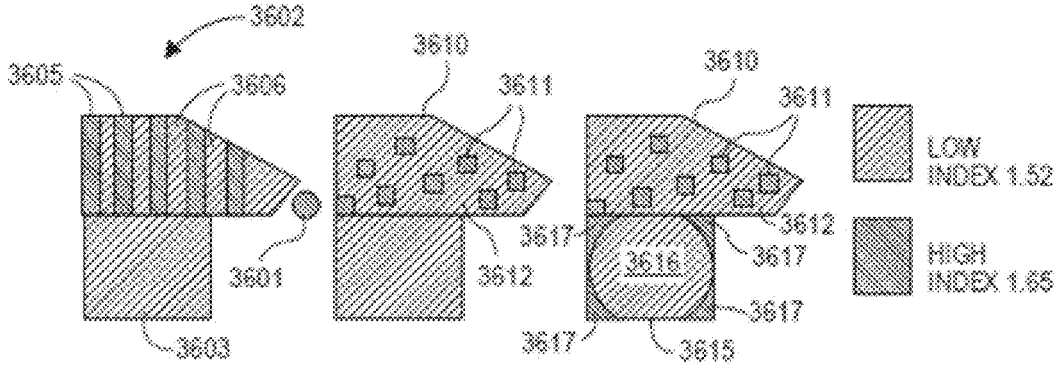

FIG. 36A FIG. 36B FIG. 36C

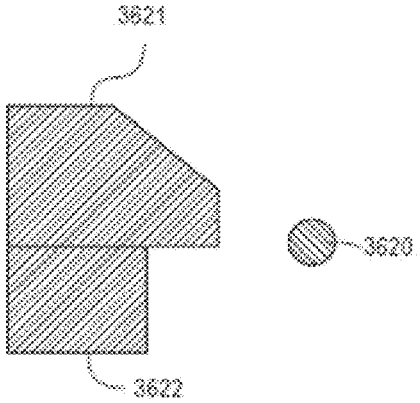

FIG. 36D

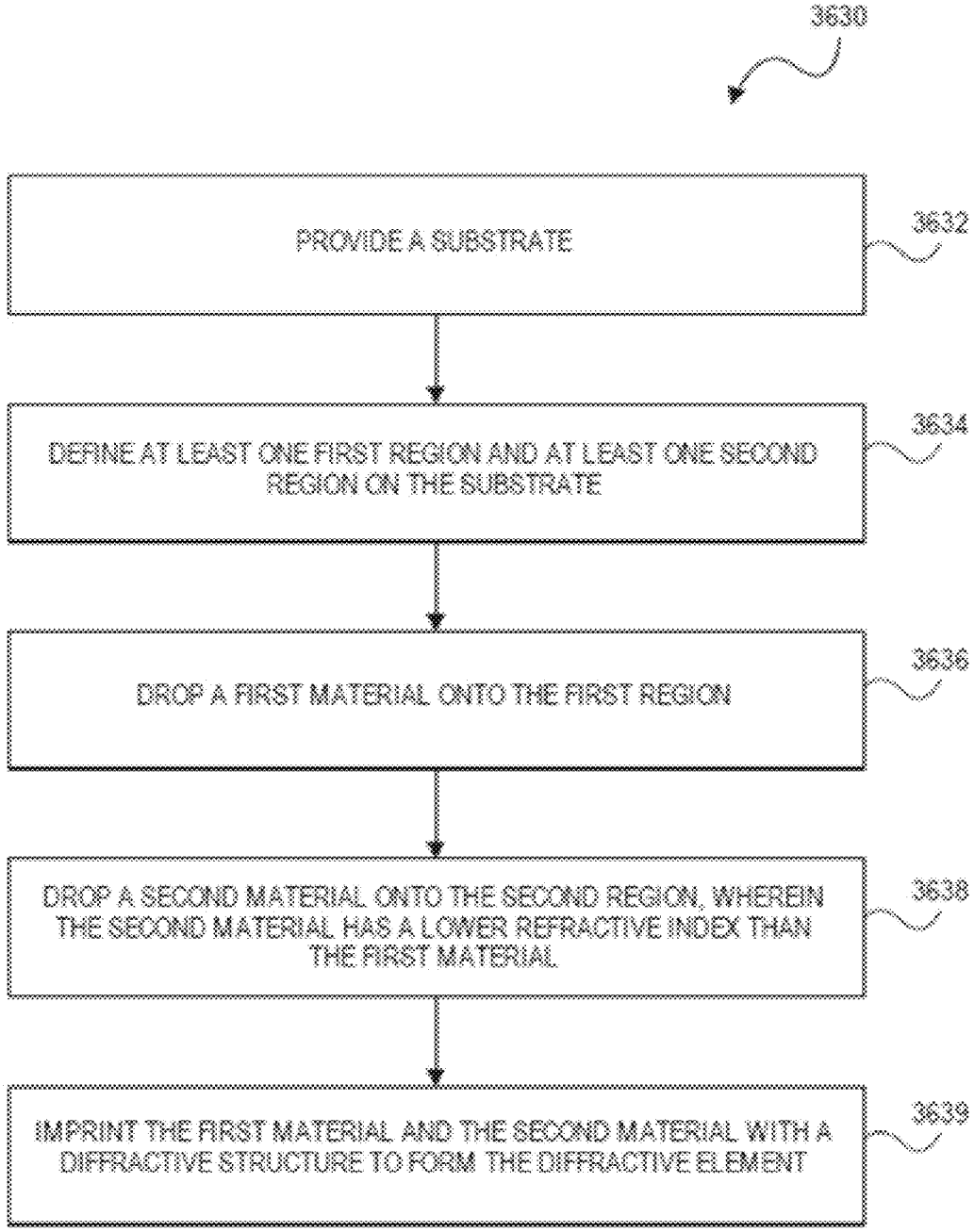
3630
PROVIDE A SUBSTRATE
3632
DEFINE AT LEAST ONE FIRST REGION AND AT LEAST ONE SECOND REGION ON THE SUBSTRATE
3634
DROP A FIRST MATERIAL ONTO THE FIRST REGION
3636
DROP A SECOND MATERIAL ONTO THE SECOND REGION, WHEREIN THE SECOND MATERIAL HAS A LOWER REFRACTIVE INDEX THAN THE FIRST MATERIAL
3638
IMPRINT THE FIRST MATERIAL AND THE SECOND MATERIAL WITH A DIFFRACTIVE STRUCTURE TO FORM THE DIFFRACTIVE ELEMENT
3639

FIG. 36E

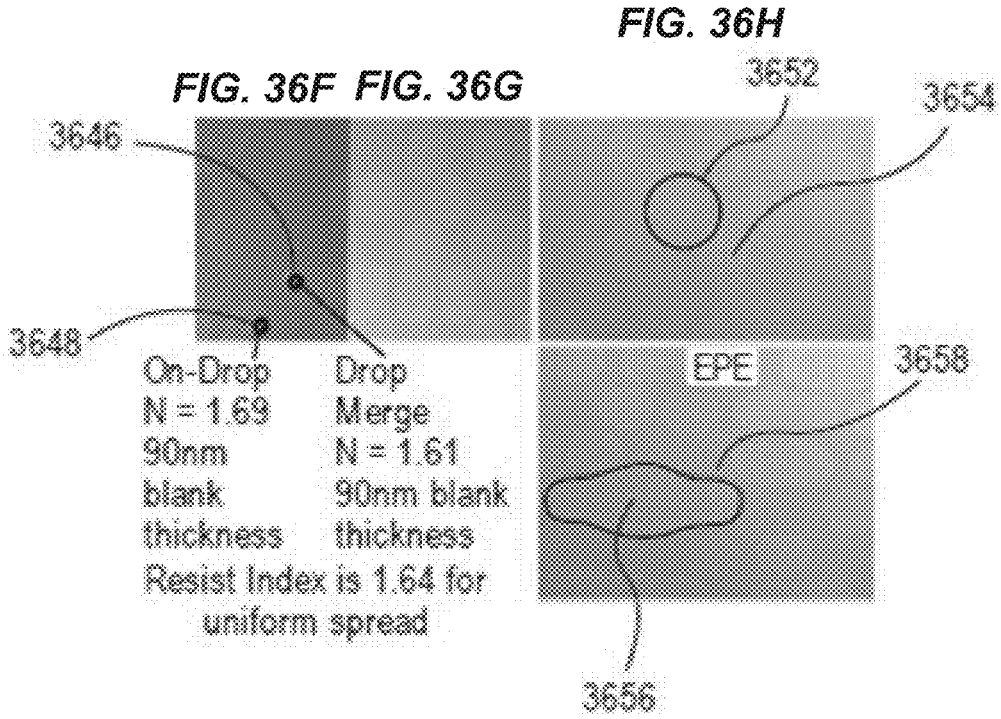
FIG. 36F
FIG. 36G
FIG. 36H
3646
3648
3652
3654
3656
3658
EPE
On-Drop
N = 1.69
90nm
blank
thickness
Drop
Merge
N = 1.61
90nm blank
thickness
Resist Index is 1.64 for
uniform spread

FIG. 36I

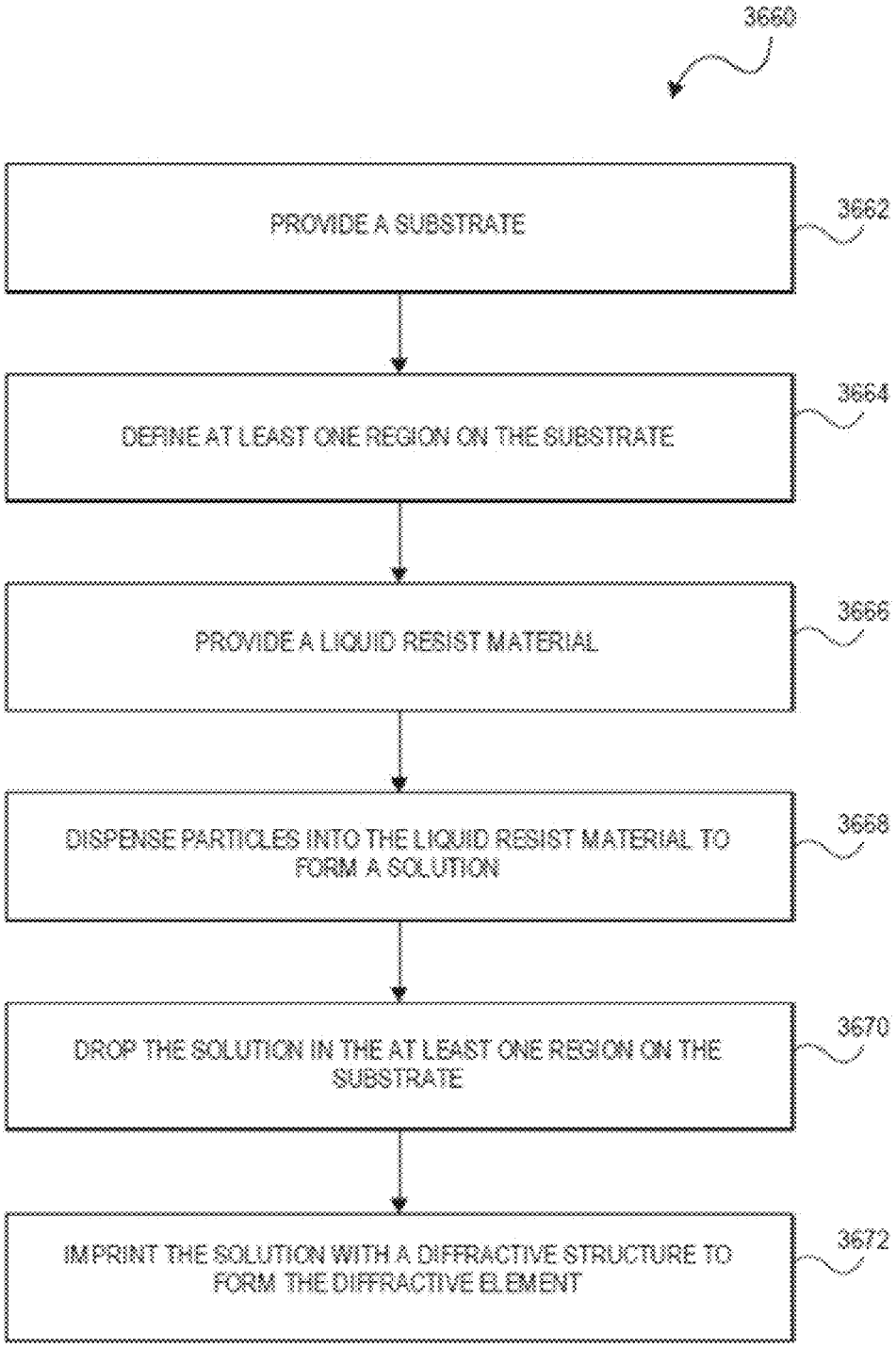
3660
PROVIDE A SUBSTRATE
3662
DEFINE AT LEAST ONE REGION ON THE SUBSTRATE
3664
PROVIDE A LIQUID RESIST MATERIAL
3666
DISPENSE PARTICLES INTO THE LIQUID RESIST MATERIAL TO FORM A SOLUTION
3668
DROP THE SOLUTION IN THE AT LEAST ONE REGION ON THE SUBSTRATE
3670
IMPRINT THE SOLUTION WITH A DIFFRACTIVE STRUCTURE TO FORM THE DIFFRACTIVE ELEMENT
3672

FIG. 36J

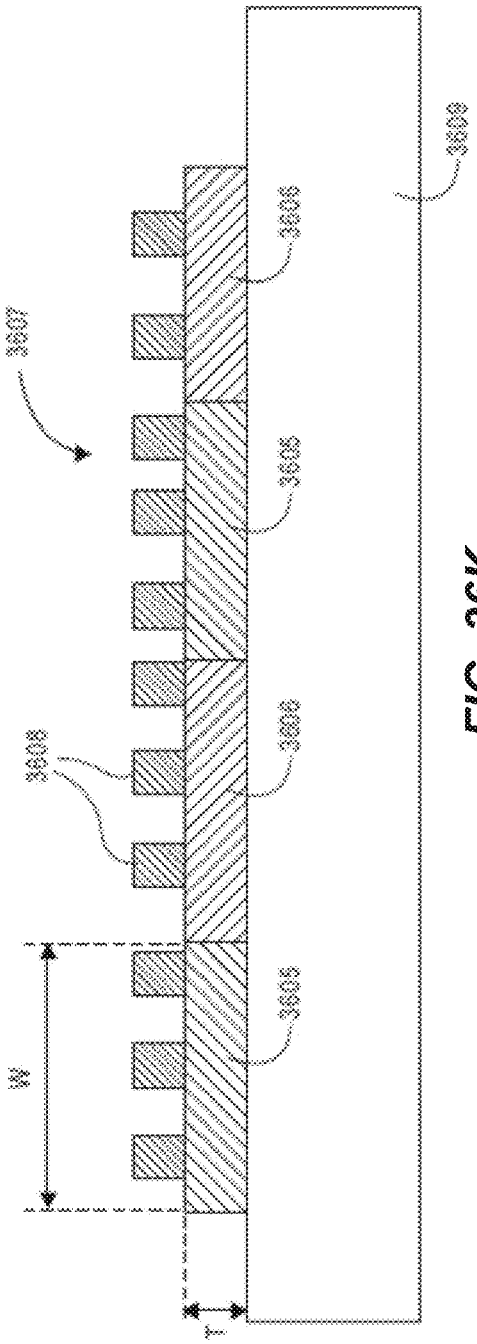

FIG. 36K

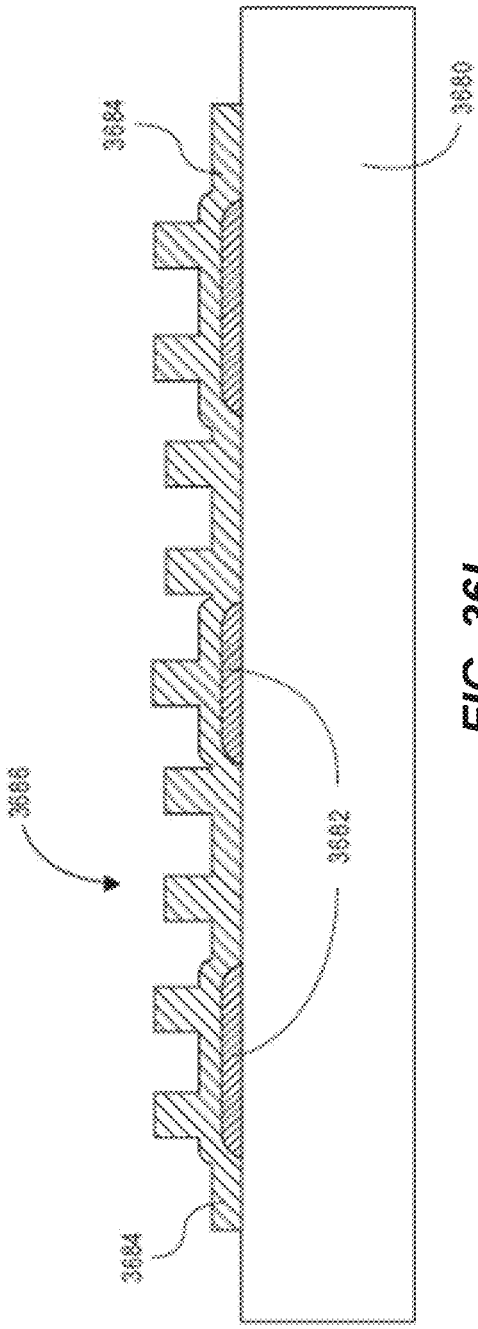

FIG. 36L

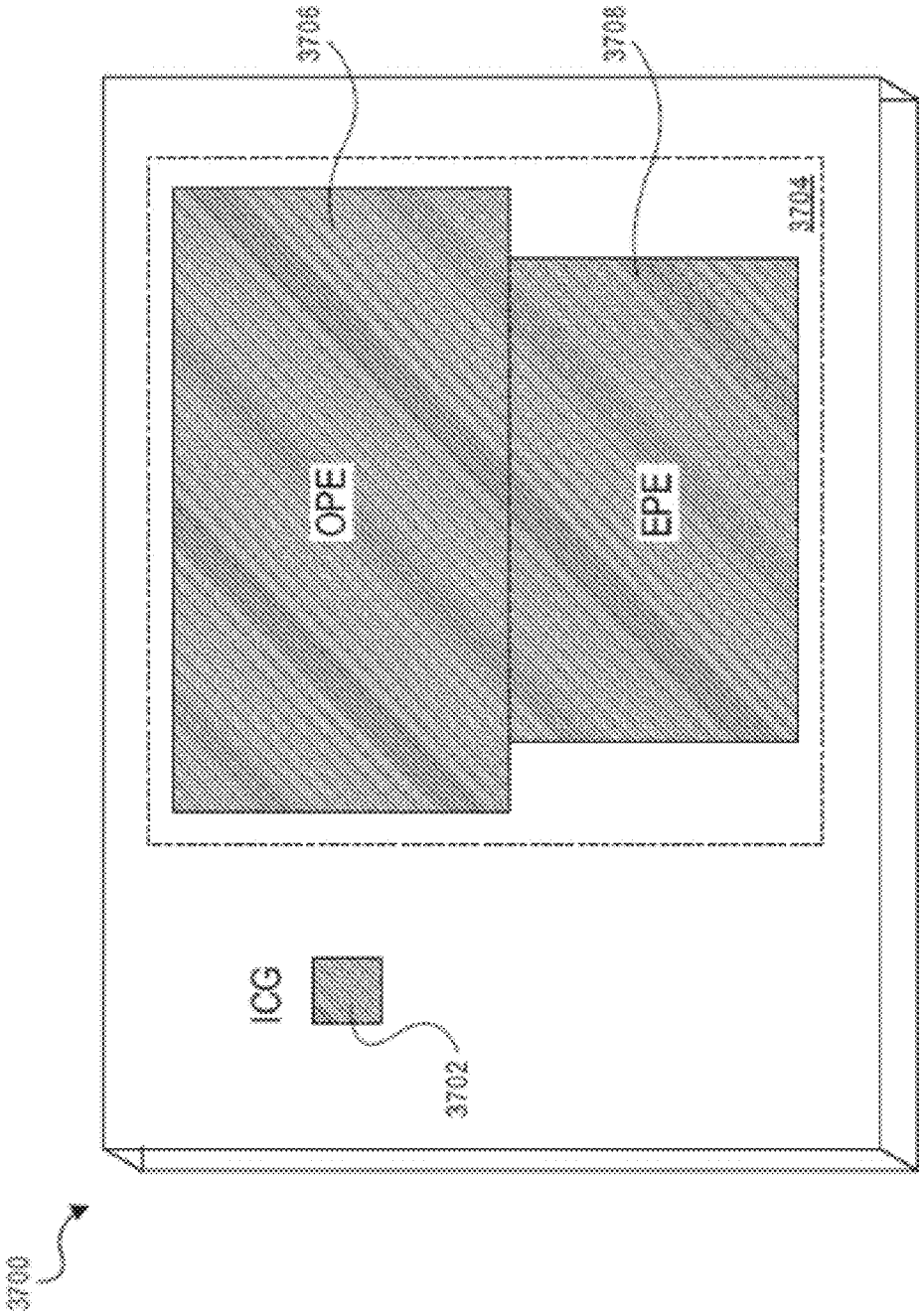

FIG. 37

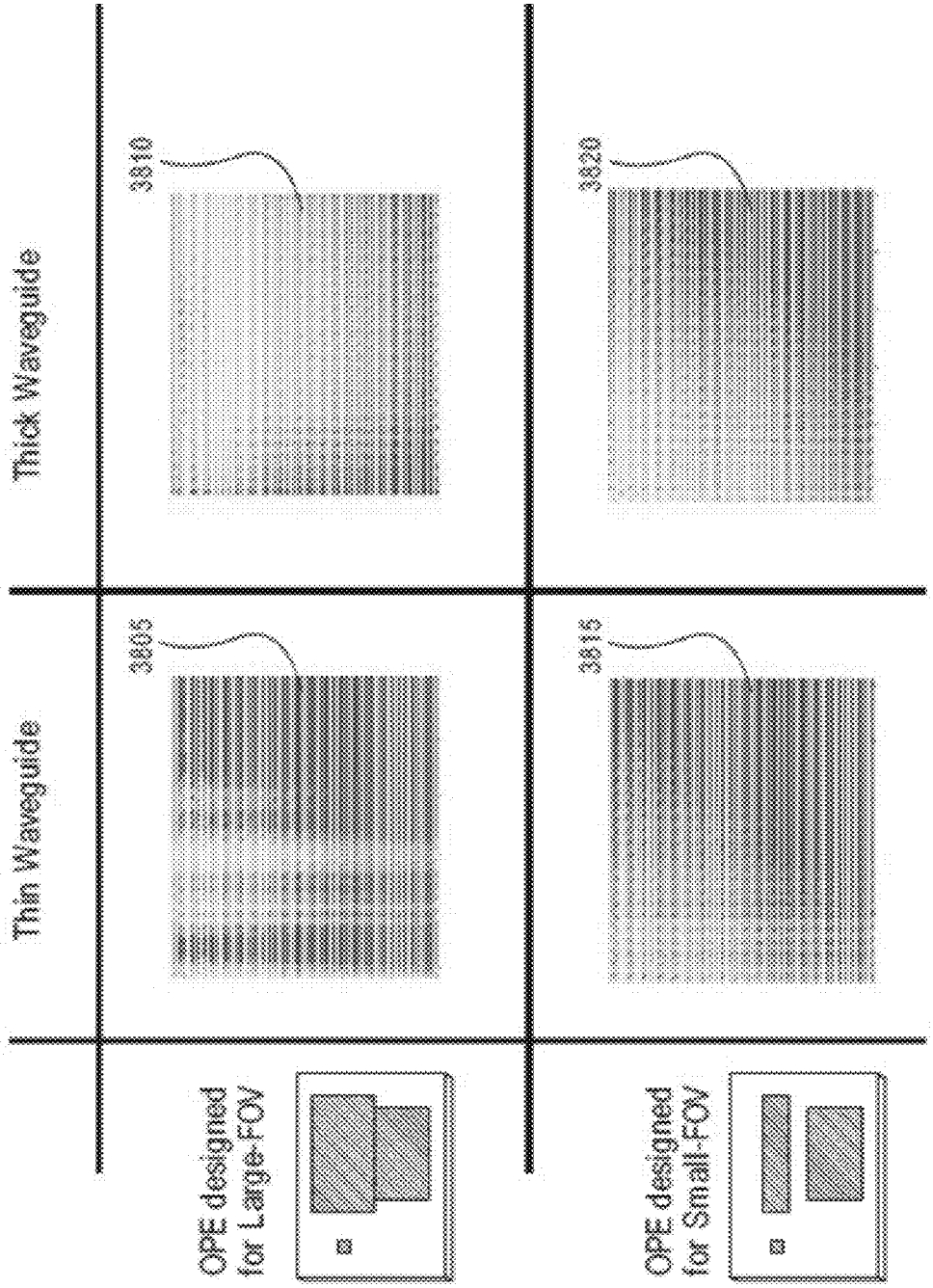
Thin Waveguide
Thick Waveguide
OPE designed for Large-FOV
OPE designed for Small-FOV
3805
3810
3815
3820

FIG. 38

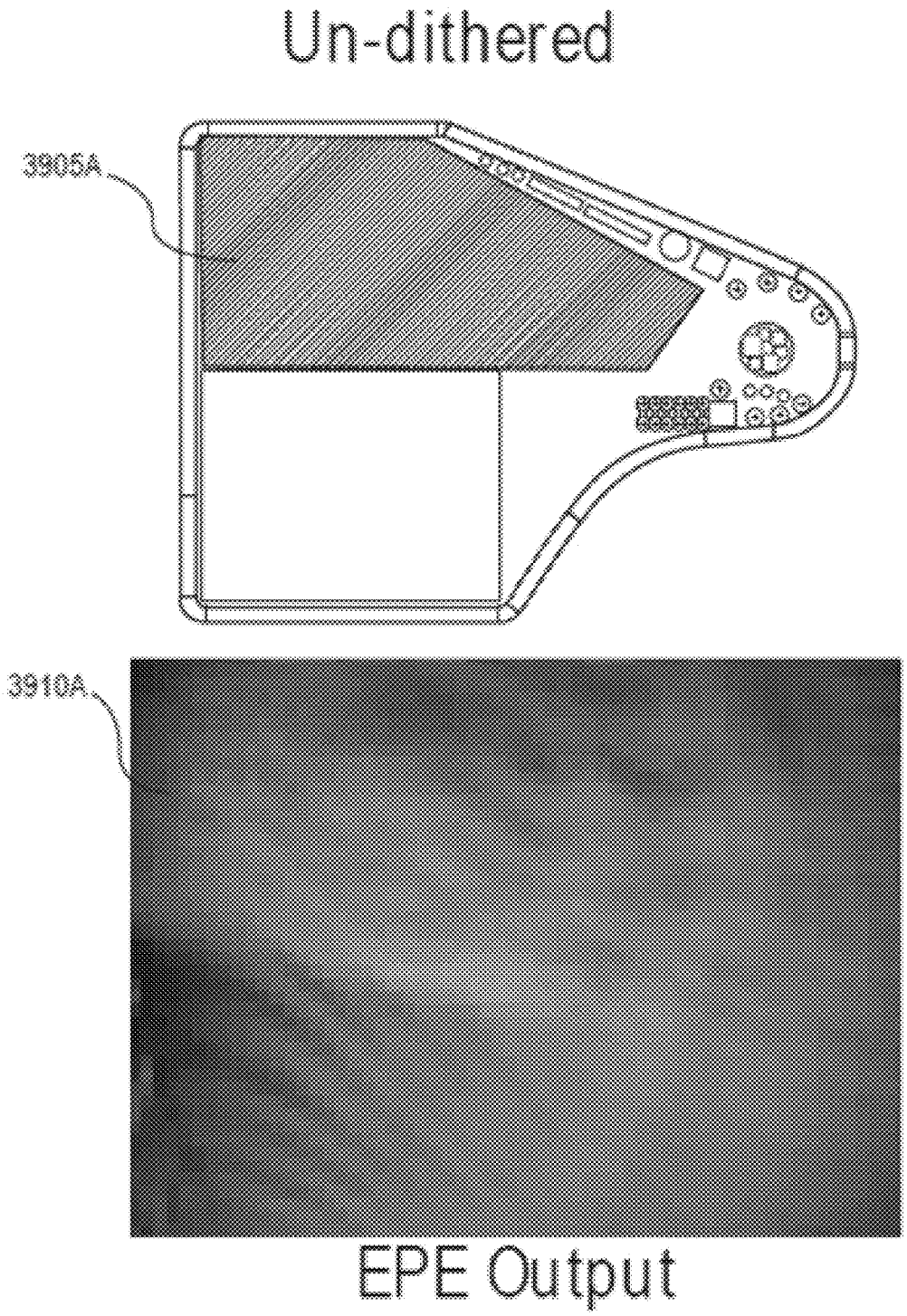

FIG. 39A

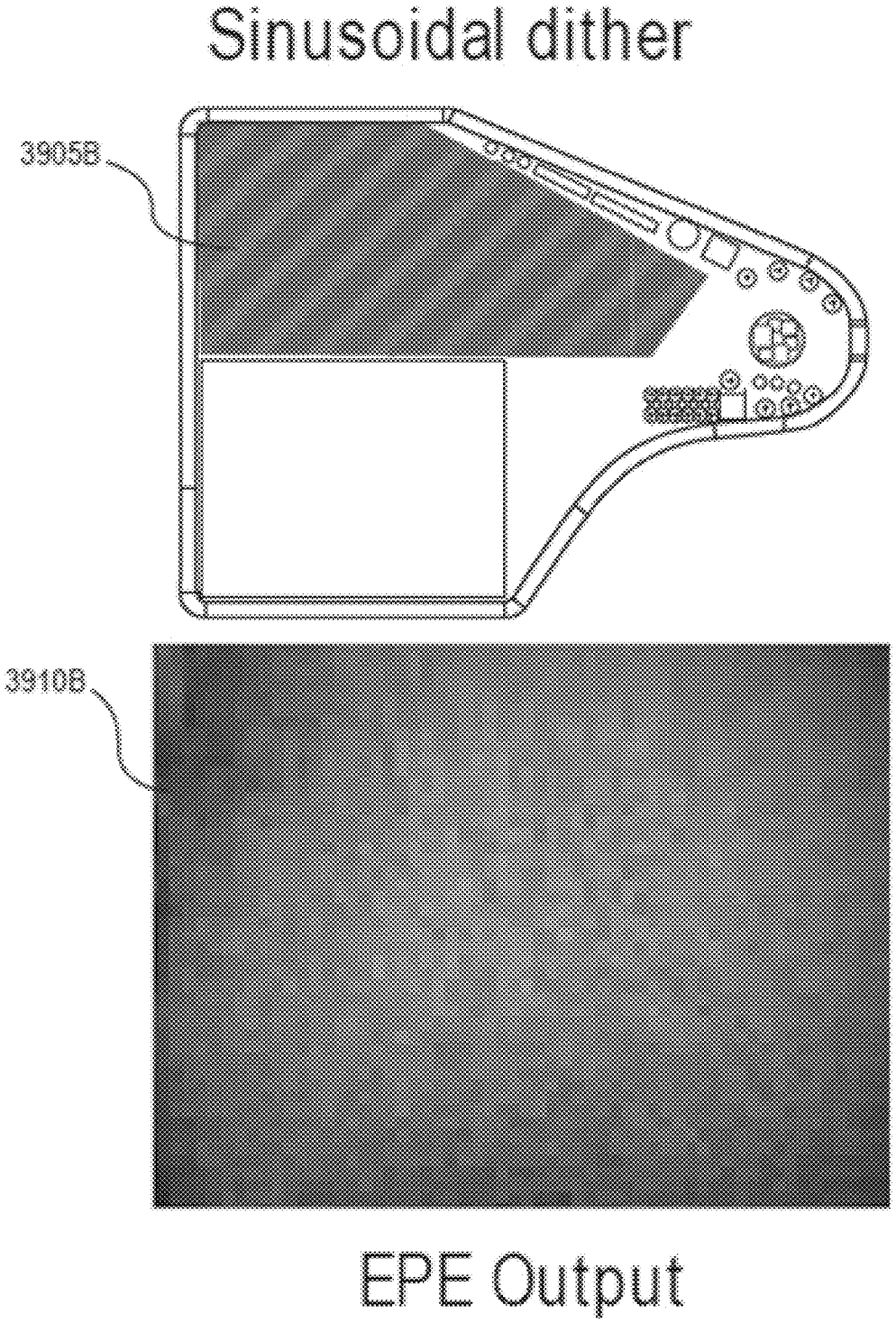

FIG. 39B

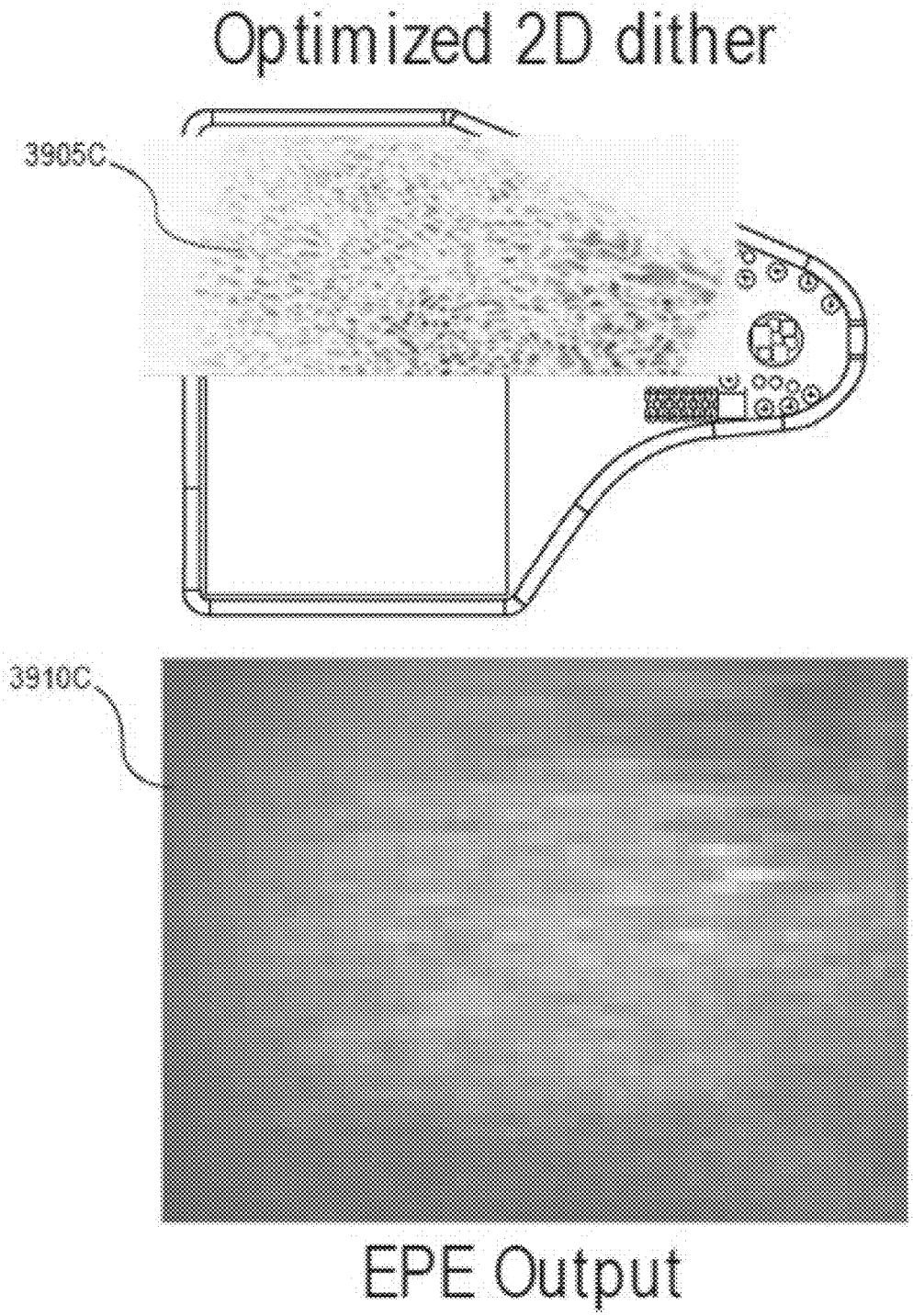

FIG. 39C

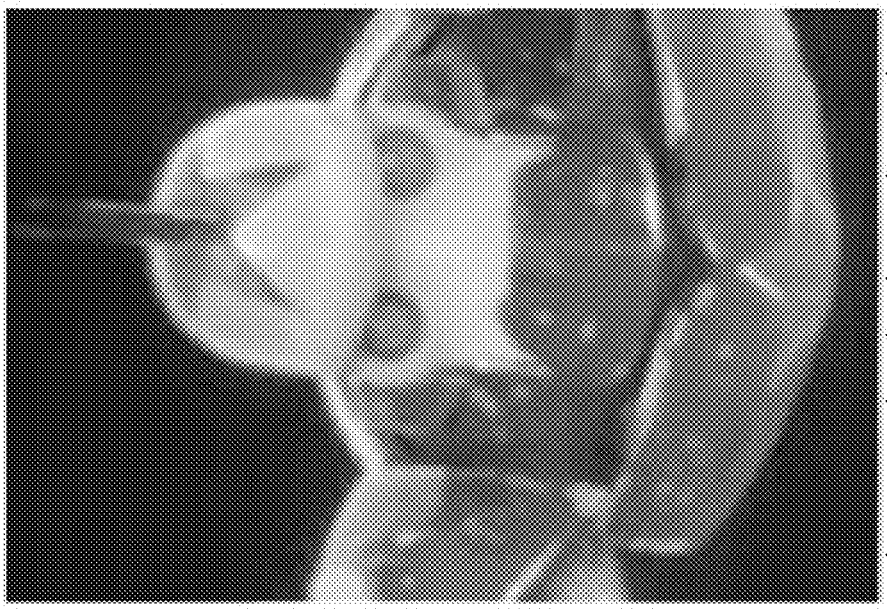

As perceived when viewer's pupil is within eyebox

Pupil luminance distribution caused by OPE dithering

FIG. 39D

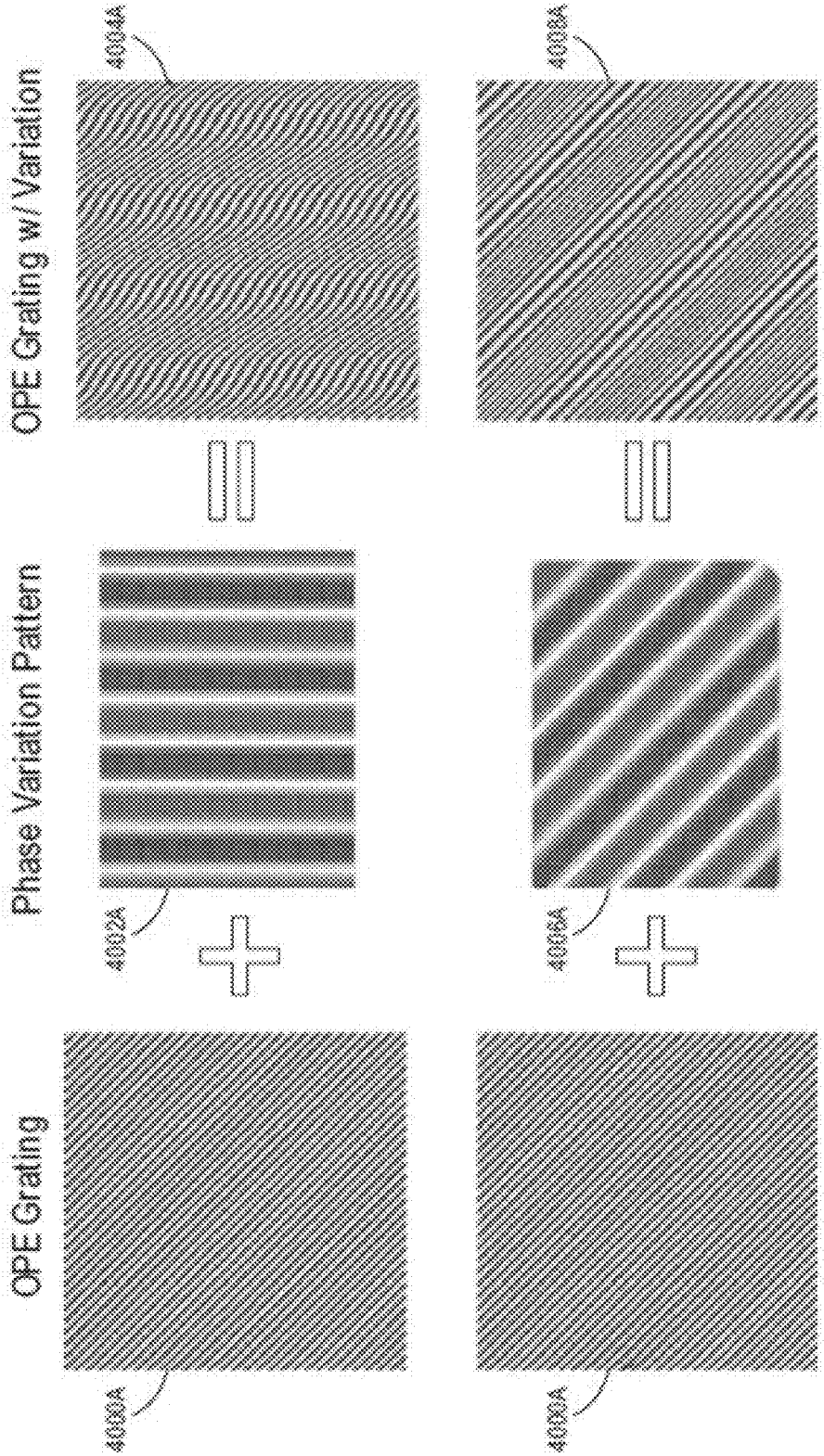
OPE Grating
Phase Variation Pattern
OPE Grating w/ Variation
4000A
4002A
4004A
4000A
4006A
4008A

FIG. 40A

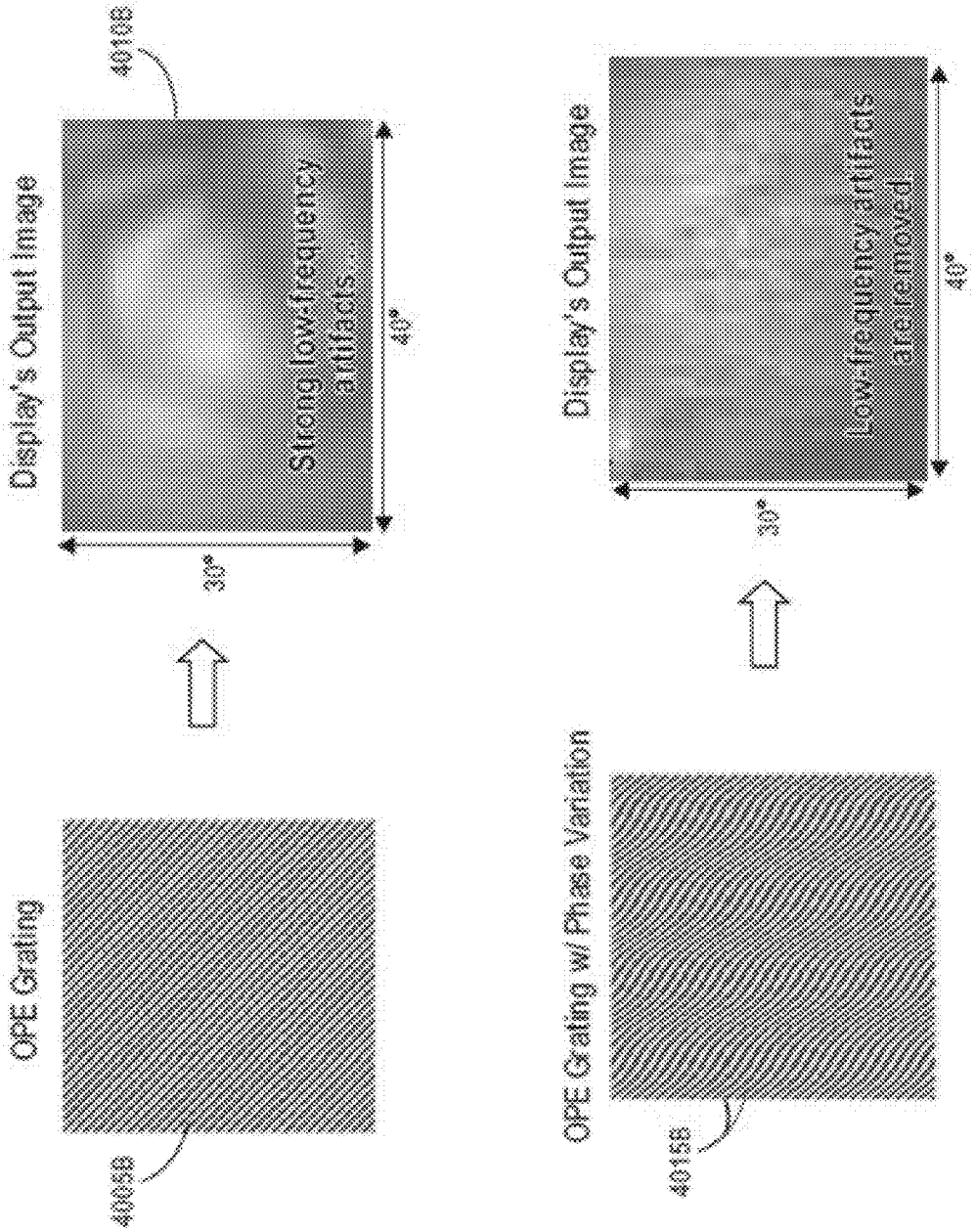
OPE Grating
4005B
Display's Output Image
4010B
Strong low-frequency artifacts
30°
40°
OPE Grating w/ Phase Variation
4015B
Display's Output Image
Low-frequency artifacts are removed
30°
40°

FIG. 40B

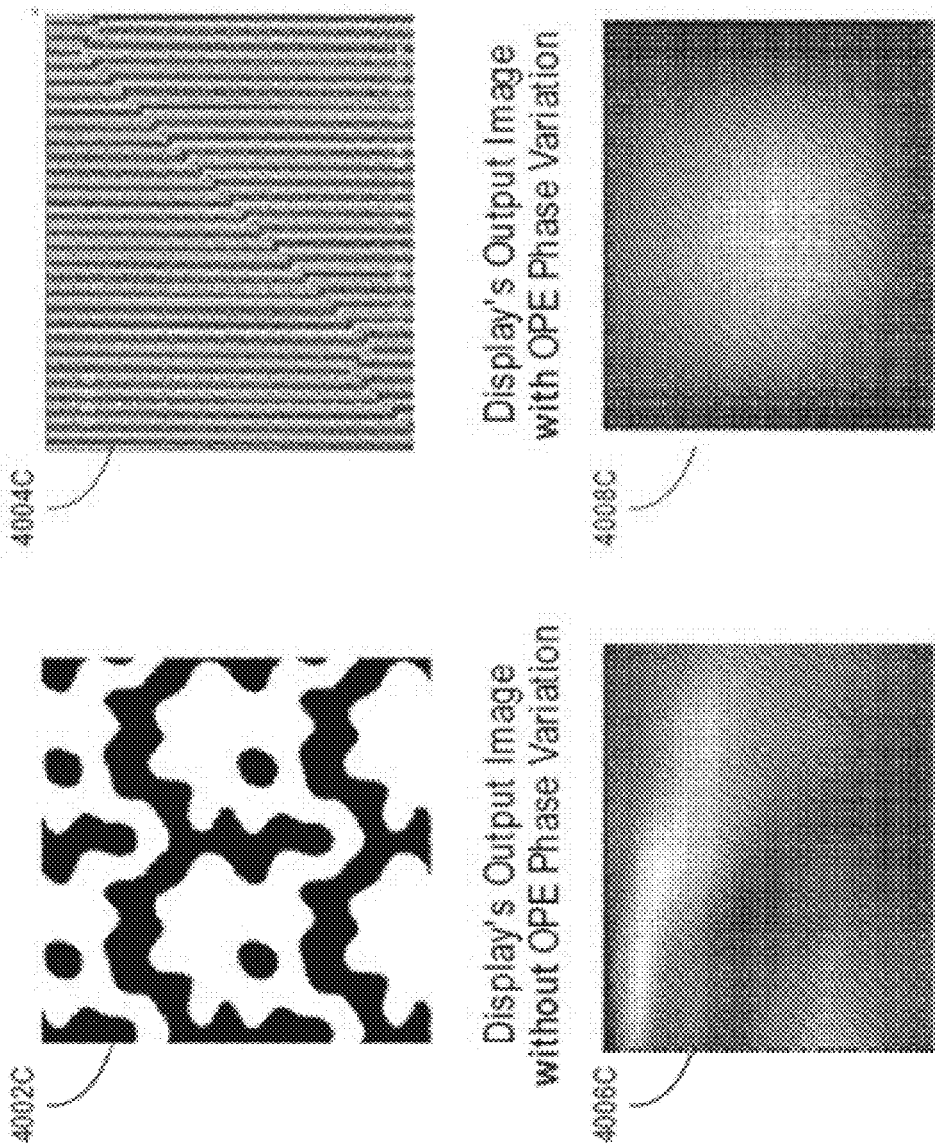
4002C
4004C
Display's Output Image without OPE Phase Variation
Display's Output Image with OPE Phase Variation
4006C
4008C

FIG. 40C

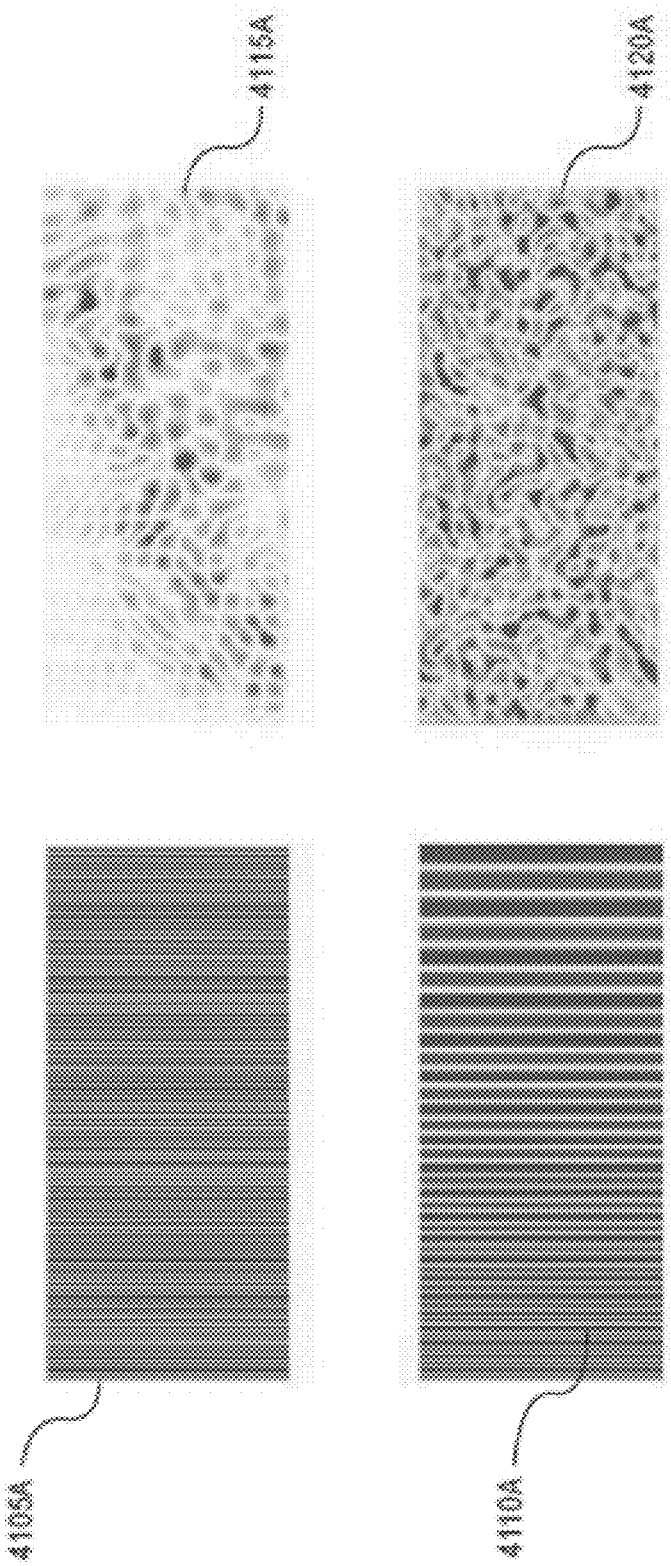

FIG. 41A

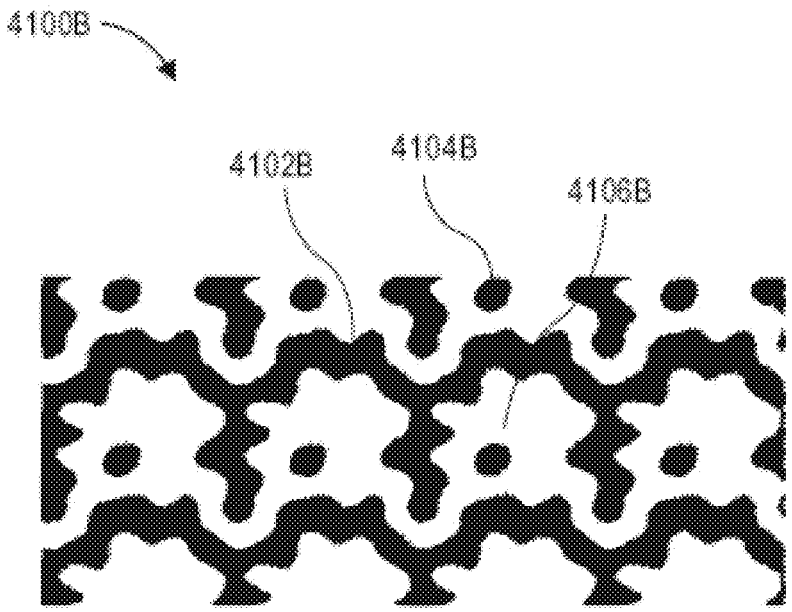

FIG. 41B

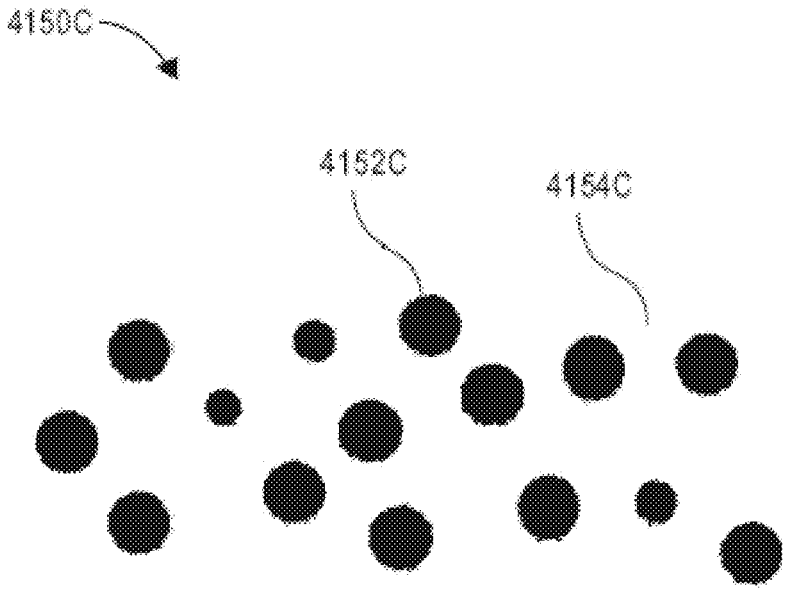

FIG. 41C

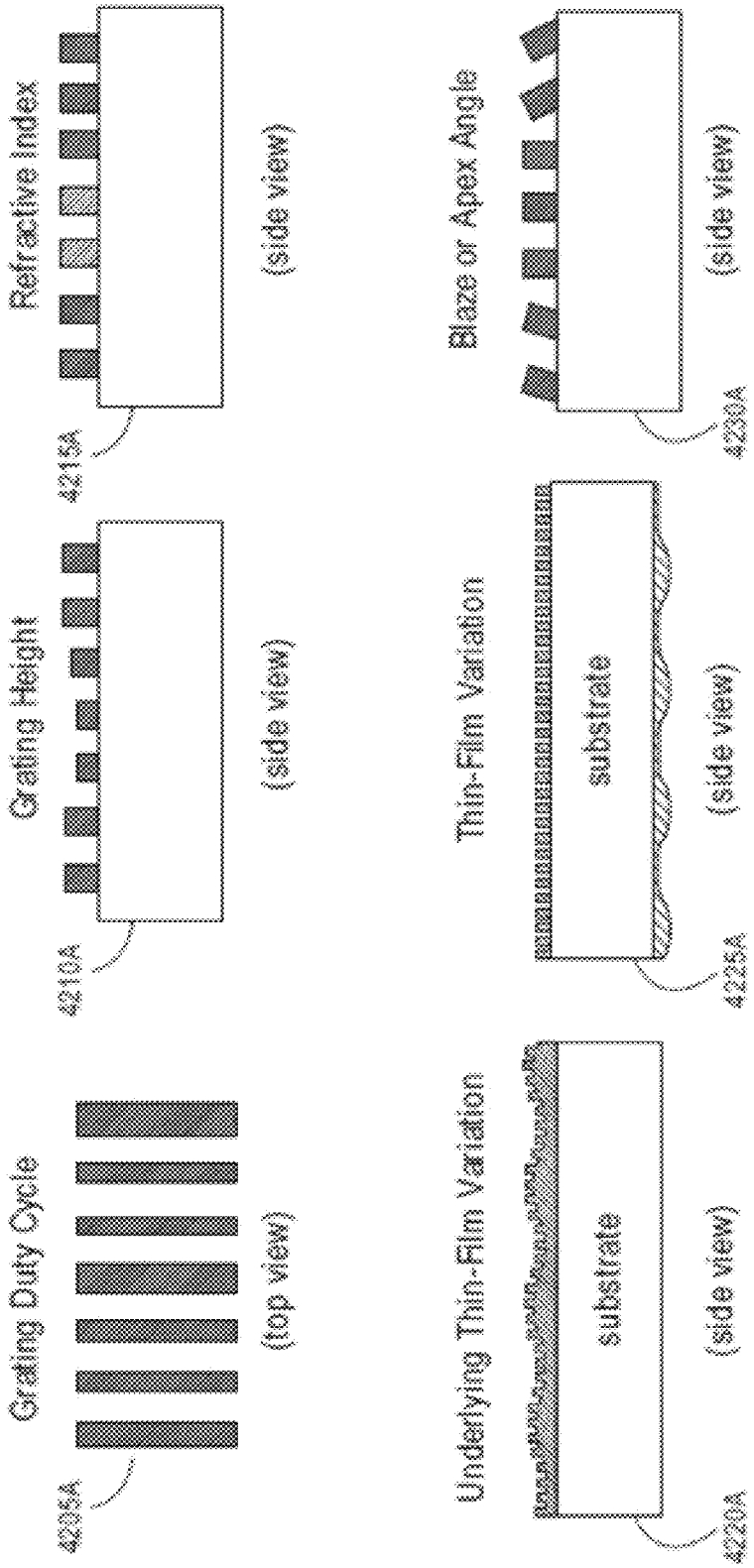
Grating Duty Cycle
4205A
(top view)
Grating Height
4210A
(side view)
Refractive Index
4215A
(side view)
Underlying Thin-Film Variation
substrate
4220A
(side view)
Thin-Film Variation
substrate
4225A
(side view)
Blaze or Apex Angle
4230A
(side view)

FIG. 42A

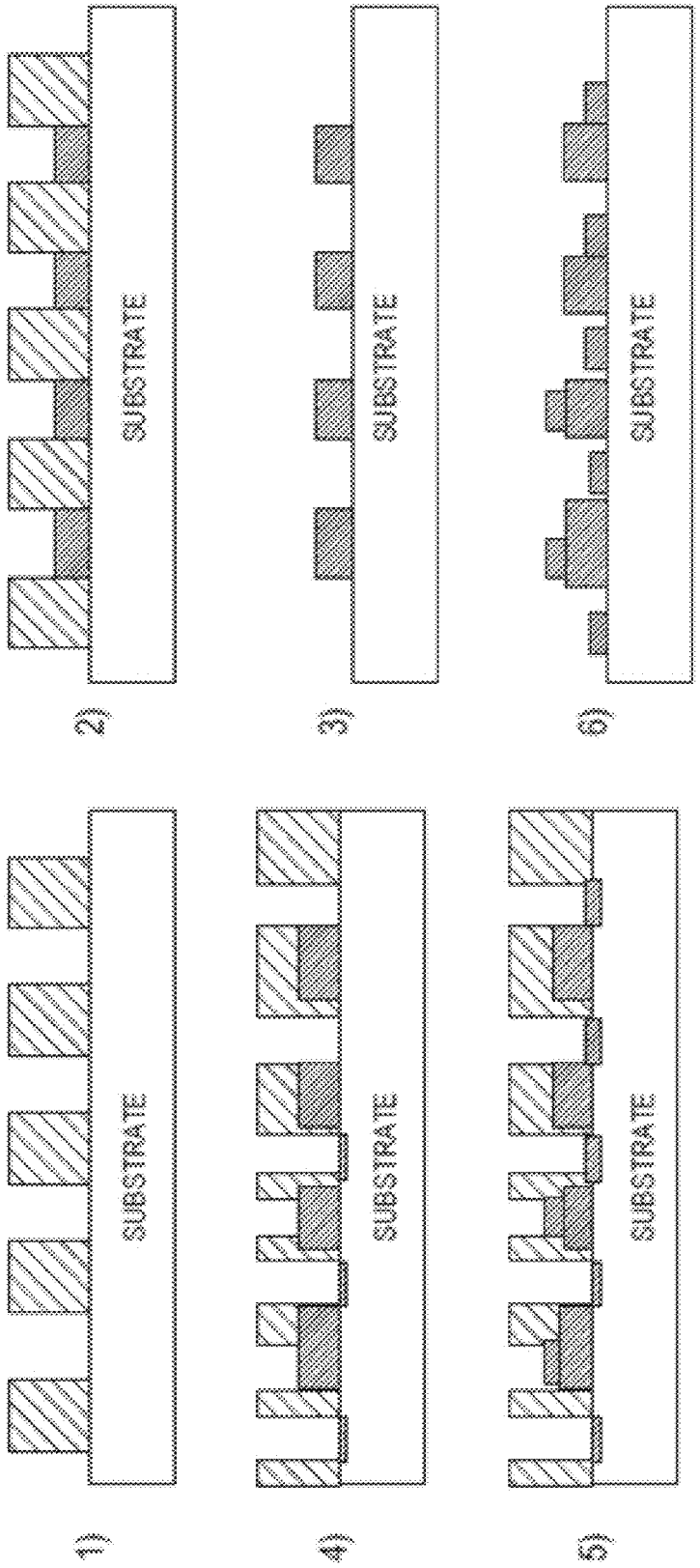
1)
SUBSTRATE
2)
SUBSTRATE
3)
SUBSTRATE
4)
SUBSTRATE
5)
SUBSTRATE
6)
SUBSTRATE

FIG. 42B

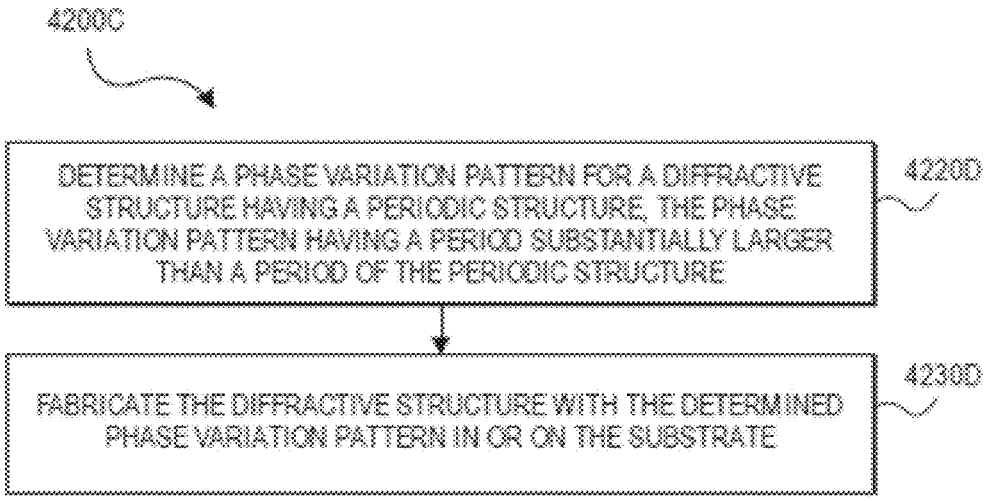

FIG. 42C

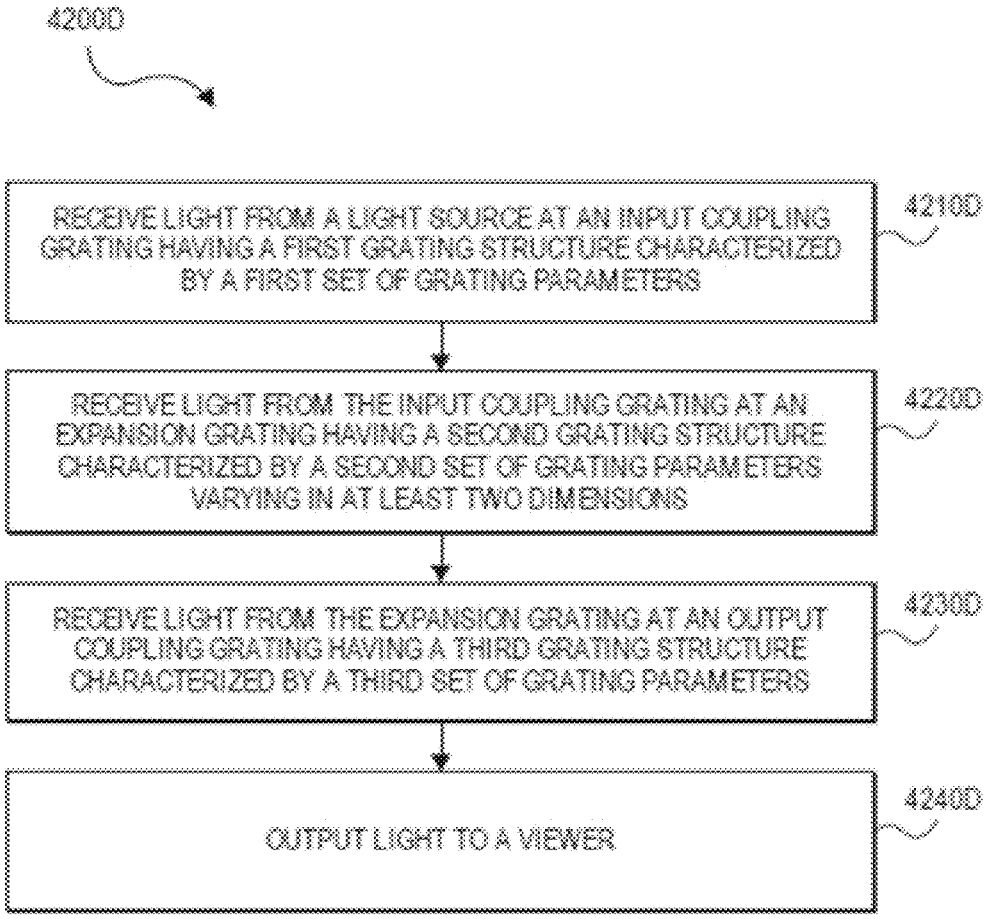

FIG. 42D

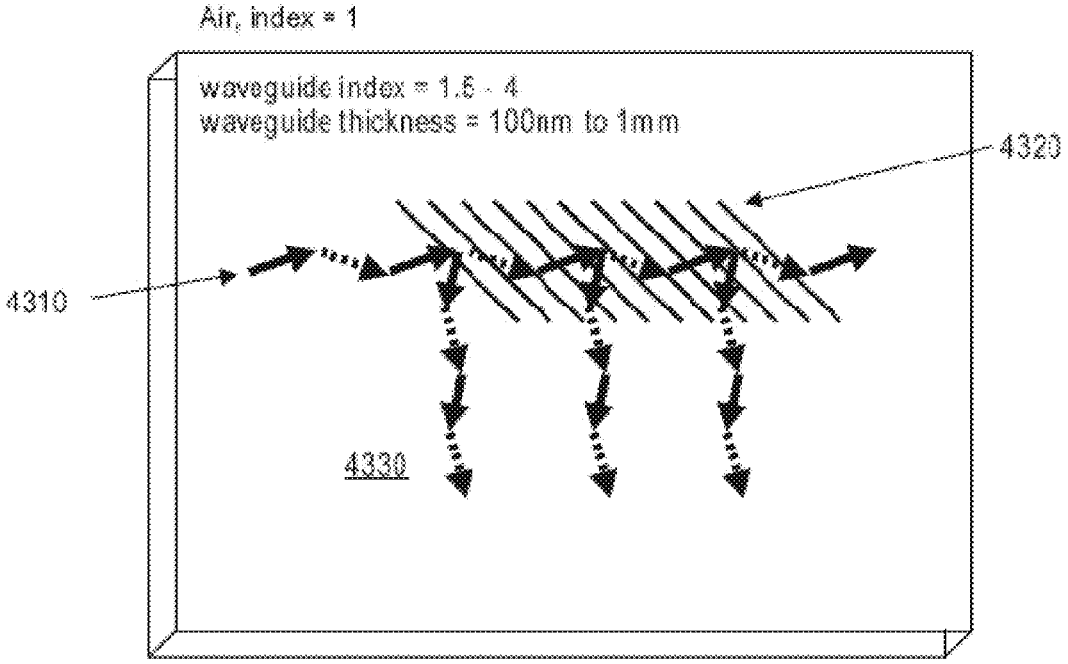
Air, index = 1
waveguide index = 1.5 - 4
waveguide thickness = 100nm to 1mm
4320
4310
4330

FIG. 43

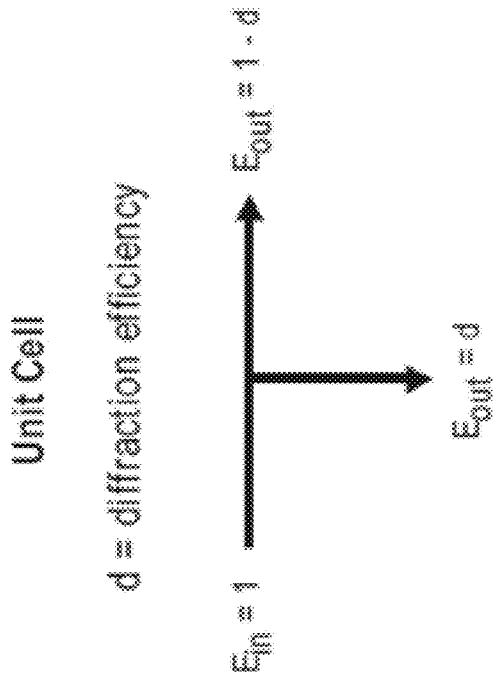
Unit Cell
d = diffraction efficiency
$E_{in} = 1$
$E_{out} = 1 - d$
$E_{out} = d$

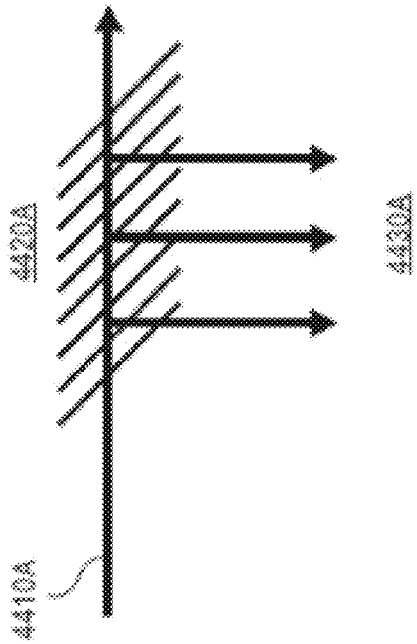
4410A
4420A
4430A

FIG. 44A

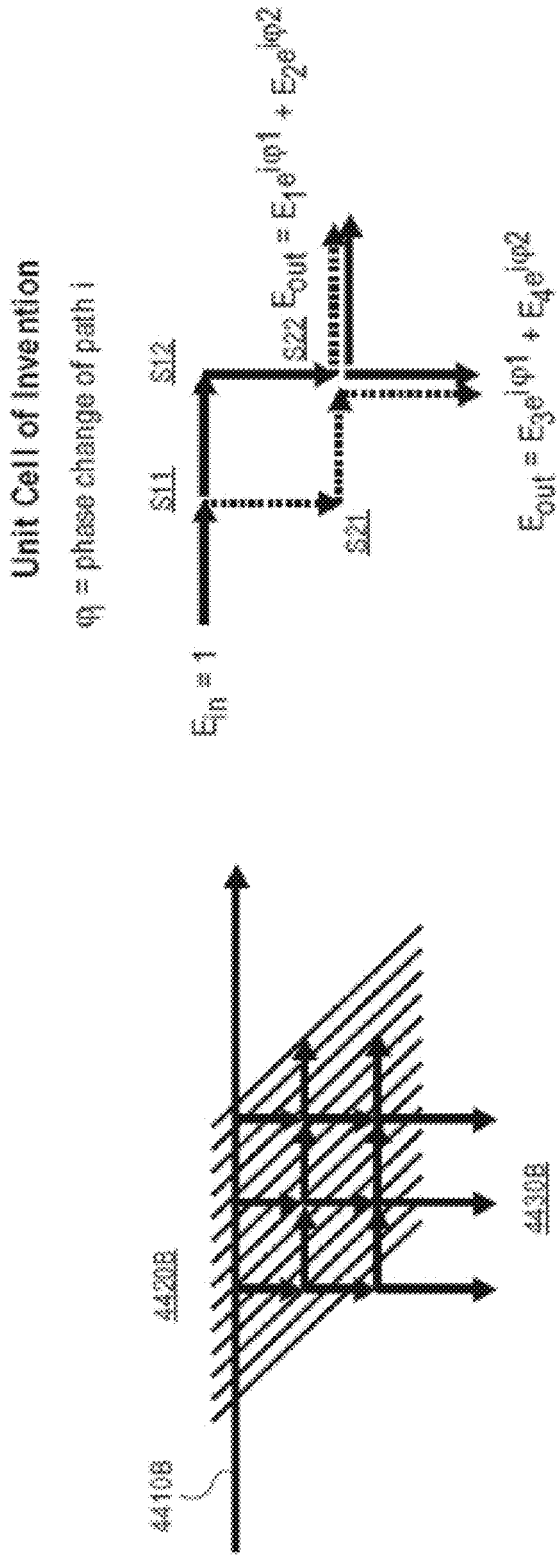
Unit Cell of Invention
φj = phase change of path j
S11
S12
S21
S22
$E_{in} = 1$
$E_{out} = E_1 e^{j\varphi 1} + E_2 e^{j\varphi 2}$
$E_{out} = E_3 e^{j\varphi 1} + E_4 e^{j\varphi 2}$
4410B
4420B
4430B

FIG. 44B

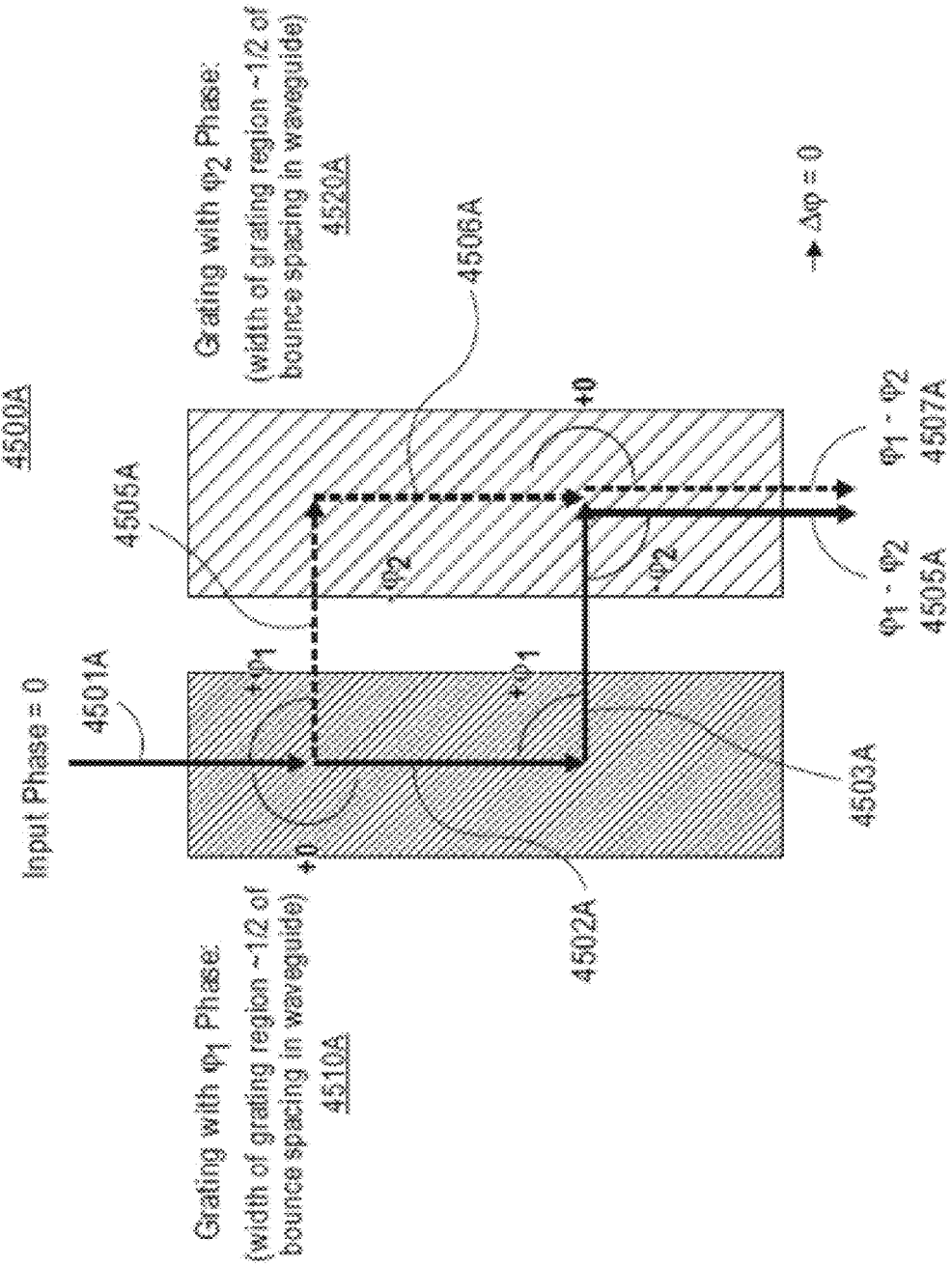
4500A
Input Phase = 0
4501A
Grating with φ_1 Phase:
(width of grating region ~1/2 of bounce spacing in waveguide)
4510A
4502A
4503A
4505A
4506A
Grating with φ_2 Phase:
(width of grating region ~1/2 of bounce spacing in waveguide)
4520A
$+\varphi_1$
$+\varphi_1$
$+0$
$+0$
$-\varphi_2$
$-\varphi_2$
$\varphi_1 - \varphi_2$
4505A
$\varphi_1 - \varphi_2$
4507A
$\Delta\varphi = 0$

FIG. 45A

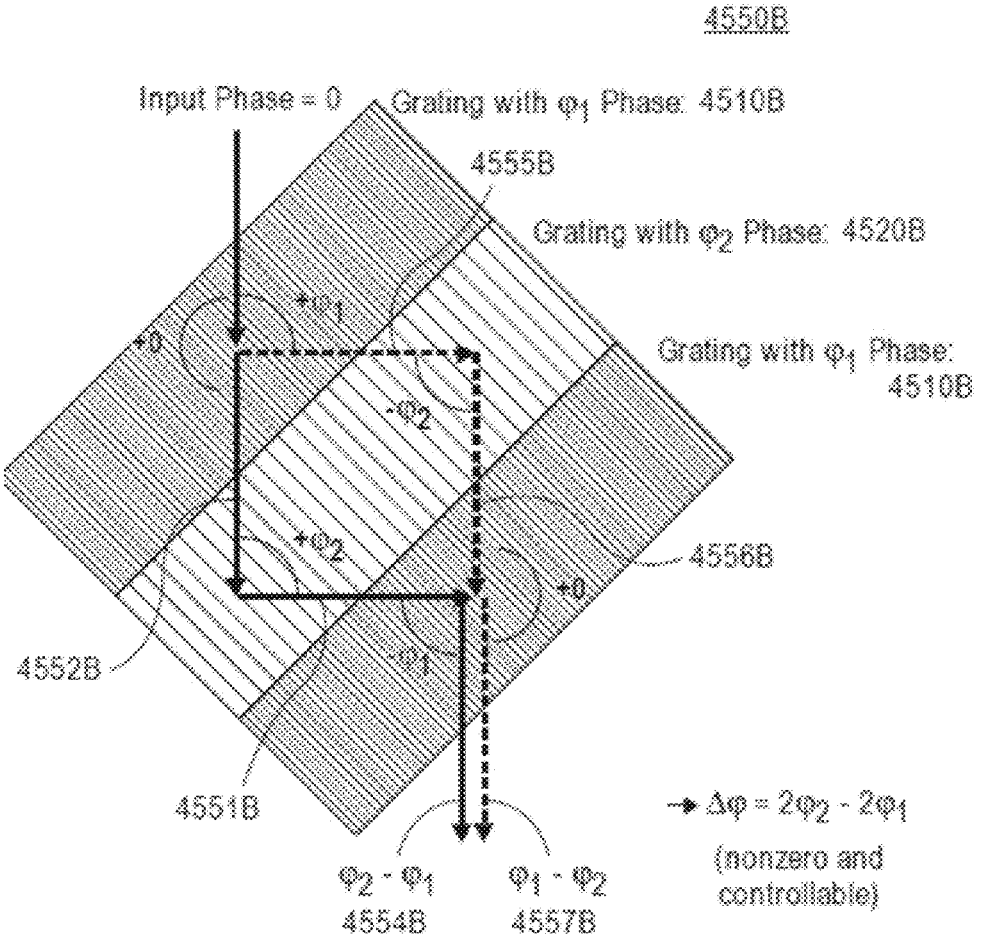
4550B
Input Phase = 0
Grating with φ1 Phase: 4510B
4555B
Grating with φ2 Phase: 4520B
+φ1
+0
Grating with φ1 Phase: 4510B
-φ2
+φ2
4556B
+0
-φ1
4552B
4551B
→ Δφ = 2φ2 - 2φ1
(nonzero and controllable)
φ2 - φ1
4554B
φ1 - φ2
4557B

FIG. 45B

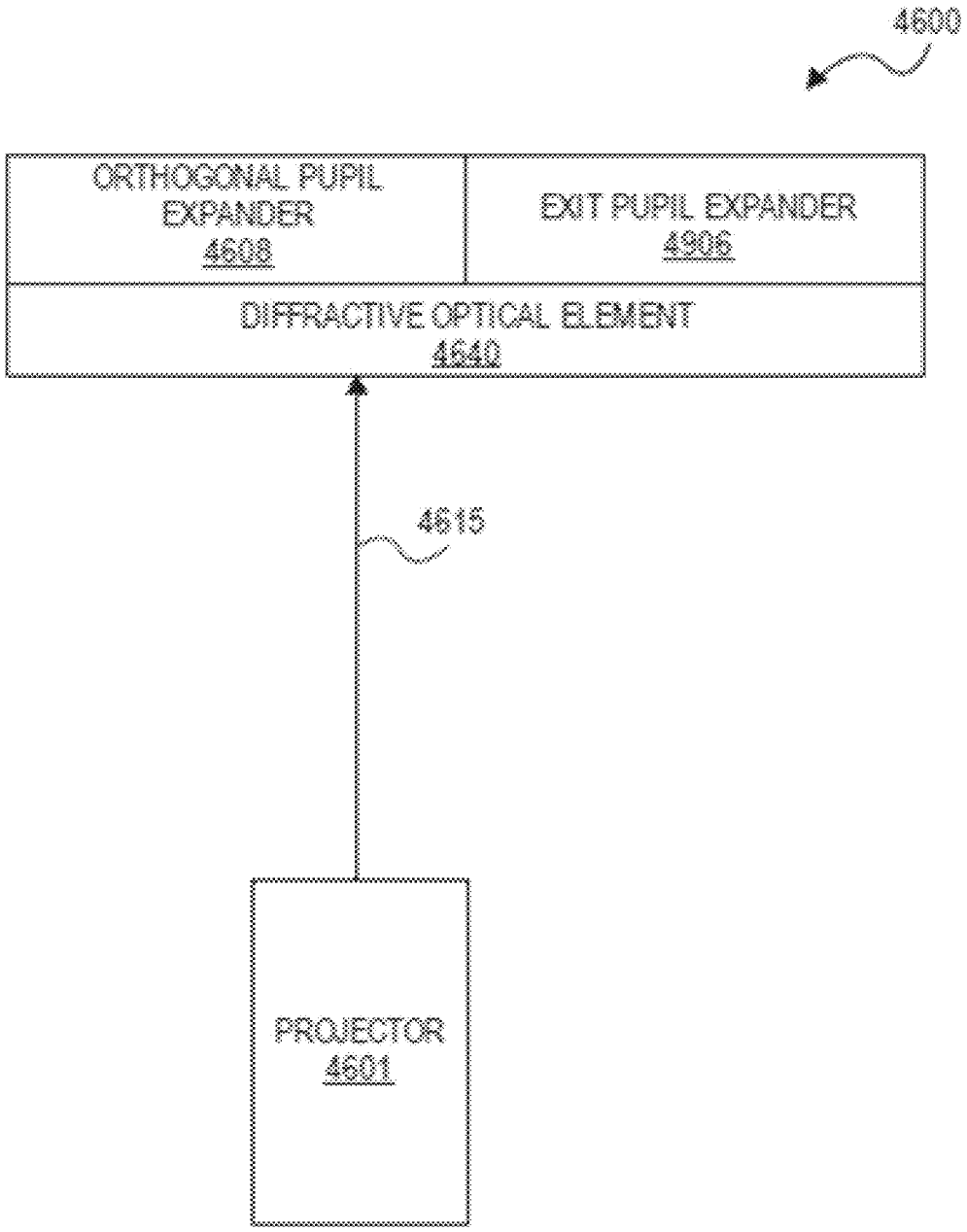
4600
ORTHOGONAL PUPIL EXPANDER
4608
EXIT PUPIL EXPANDER
4906
DIFFRACTIVE OPTICAL ELEMENT
4640
4615
PROJECTOR
4601

FIG. 46

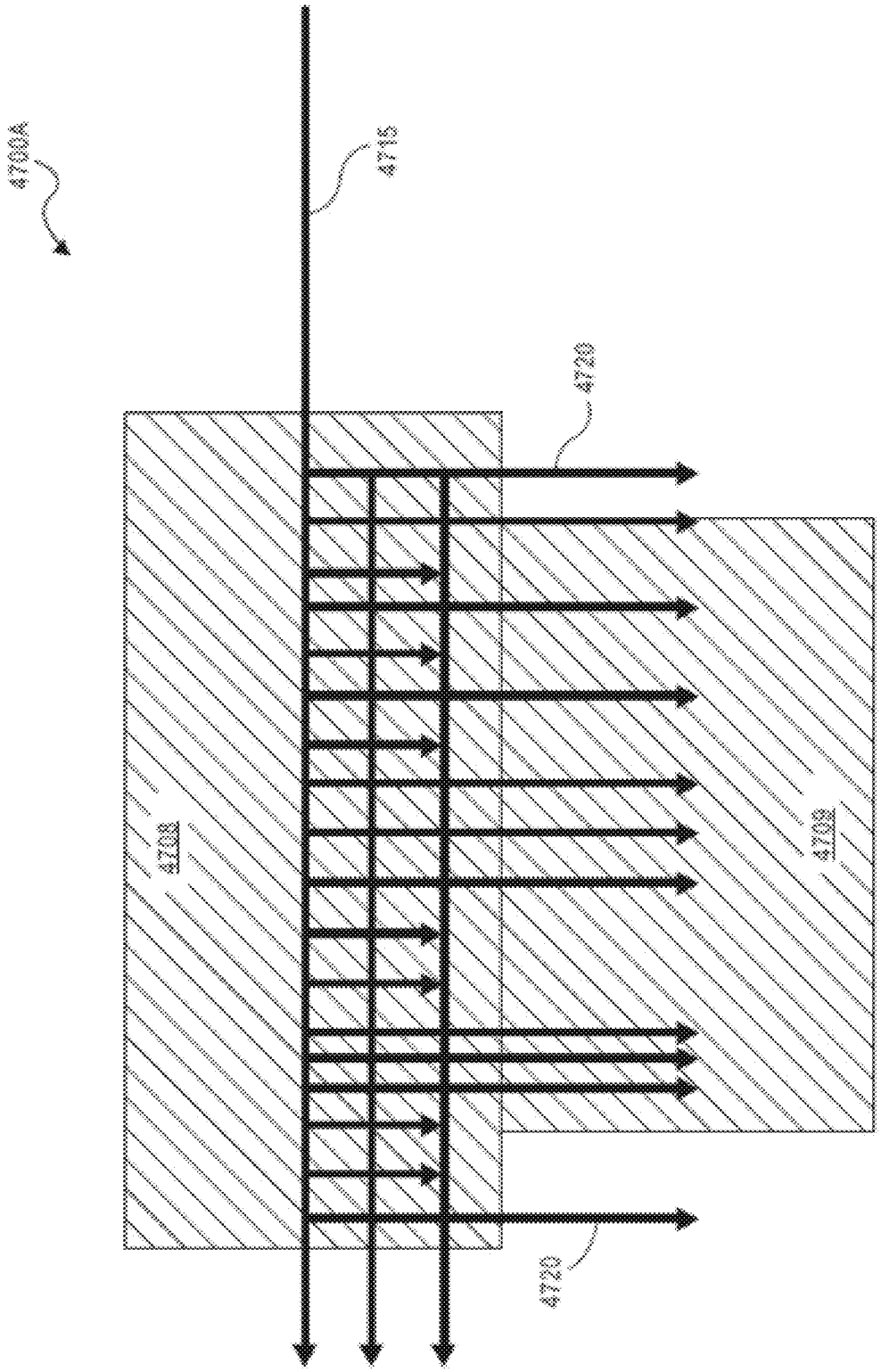

FIG. 47A

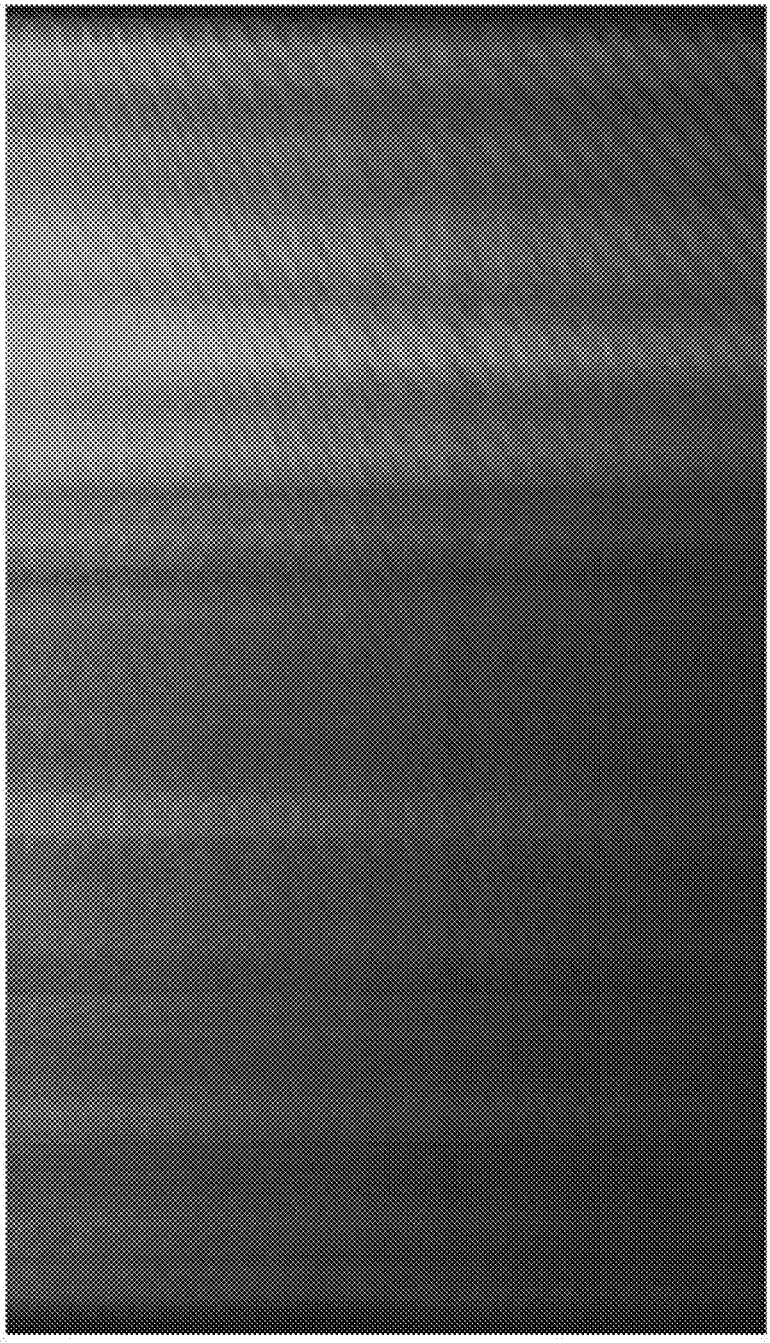

FIG. 47B

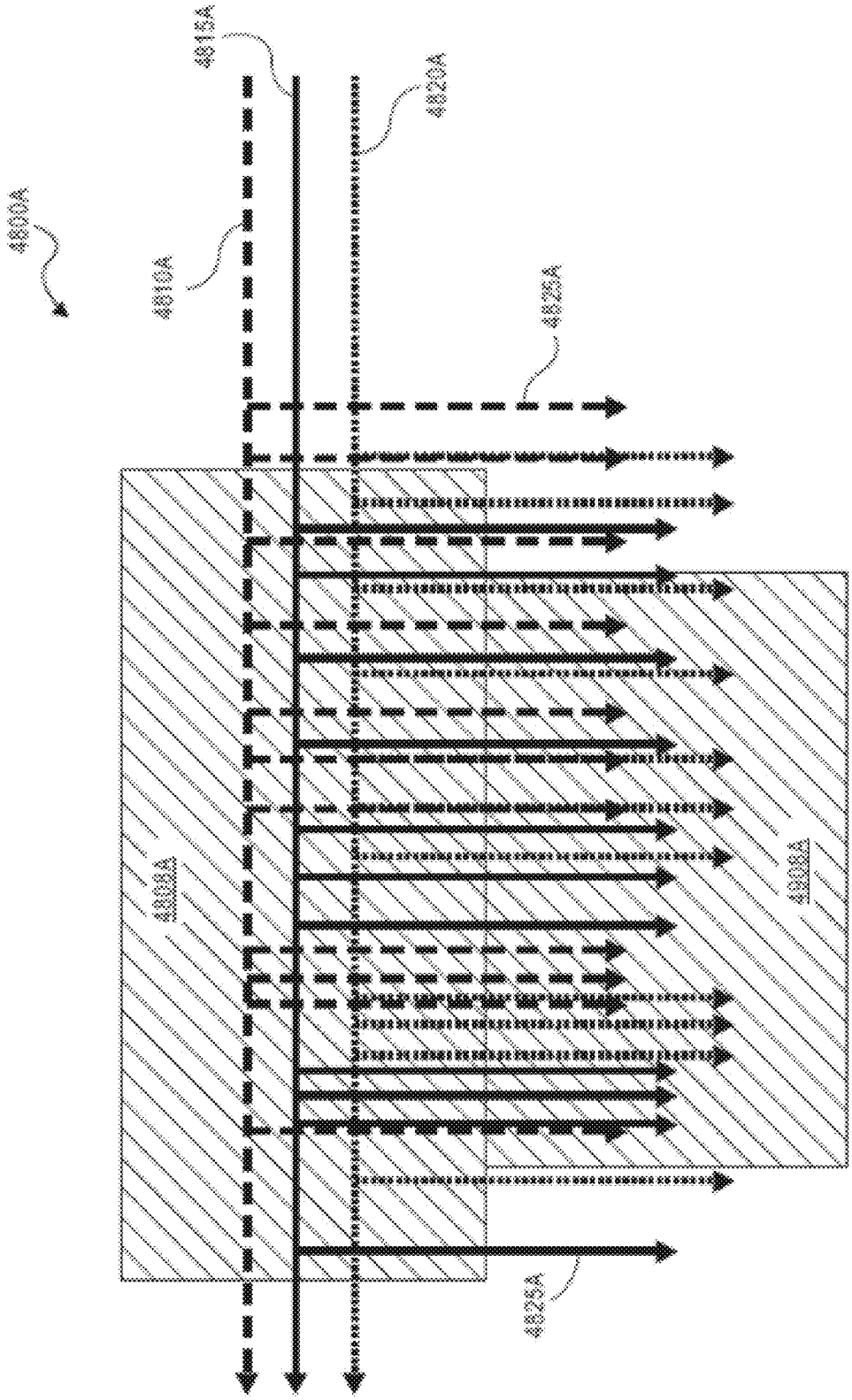

FIG. 48A

FIG. 48B

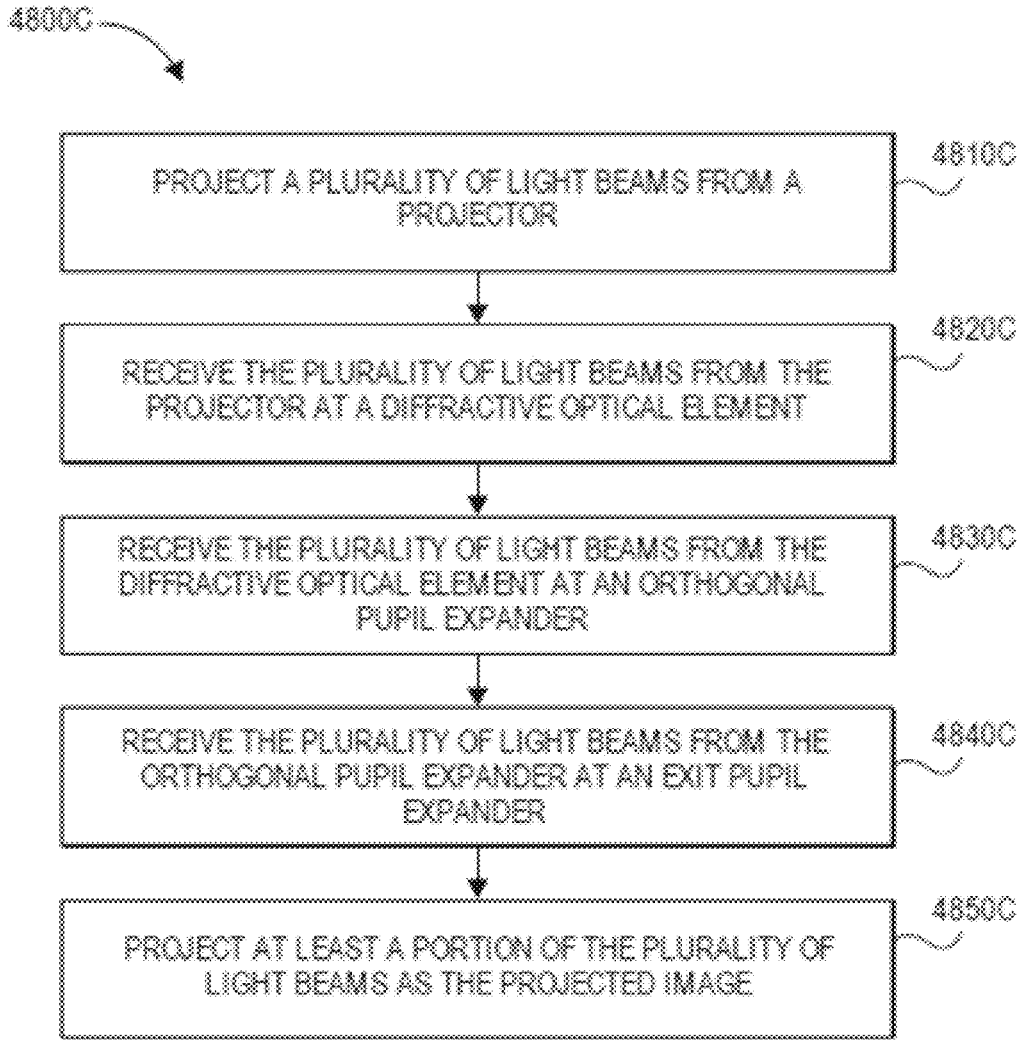
4800C
PROJECT A PLURALITY OF LIGHT BEAMS FROM A PROJECTOR
4810C
RECEIVE THE PLURALITY OF LIGHT BEAMS FROM THE PROJECTOR AT A DIFFRACTIVE OPTICAL ELEMENT
4820C
RECEIVE THE PLURALITY OF LIGHT BEAMS FROM THE DIFFRACTIVE OPTICAL ELEMENT AT AN ORTHOGONAL PUPIL EXPANDER
4830C
RECEIVE THE PLURALITY OF LIGHT BEAMS FROM THE ORTHOGONAL PUPIL EXPANDER AT AN EXIT PUPIL EXPANDER
4840C
PROJECT AT LEAST A PORTION OF THE PLURALITY OF LIGHT BEAMS AS THE PROJECTED IMAGE
4850C

FIG. 48C

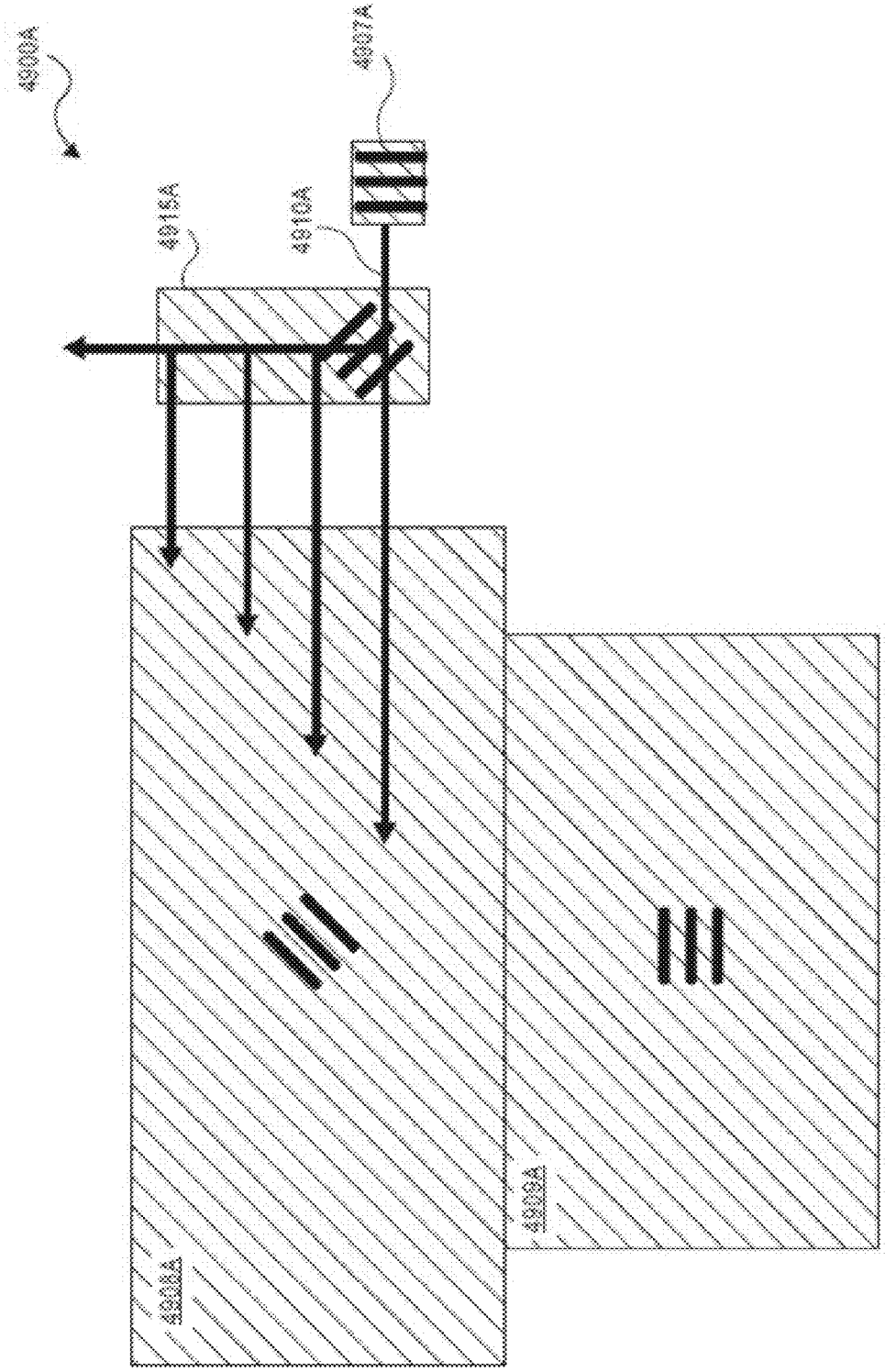

FIG. 49A

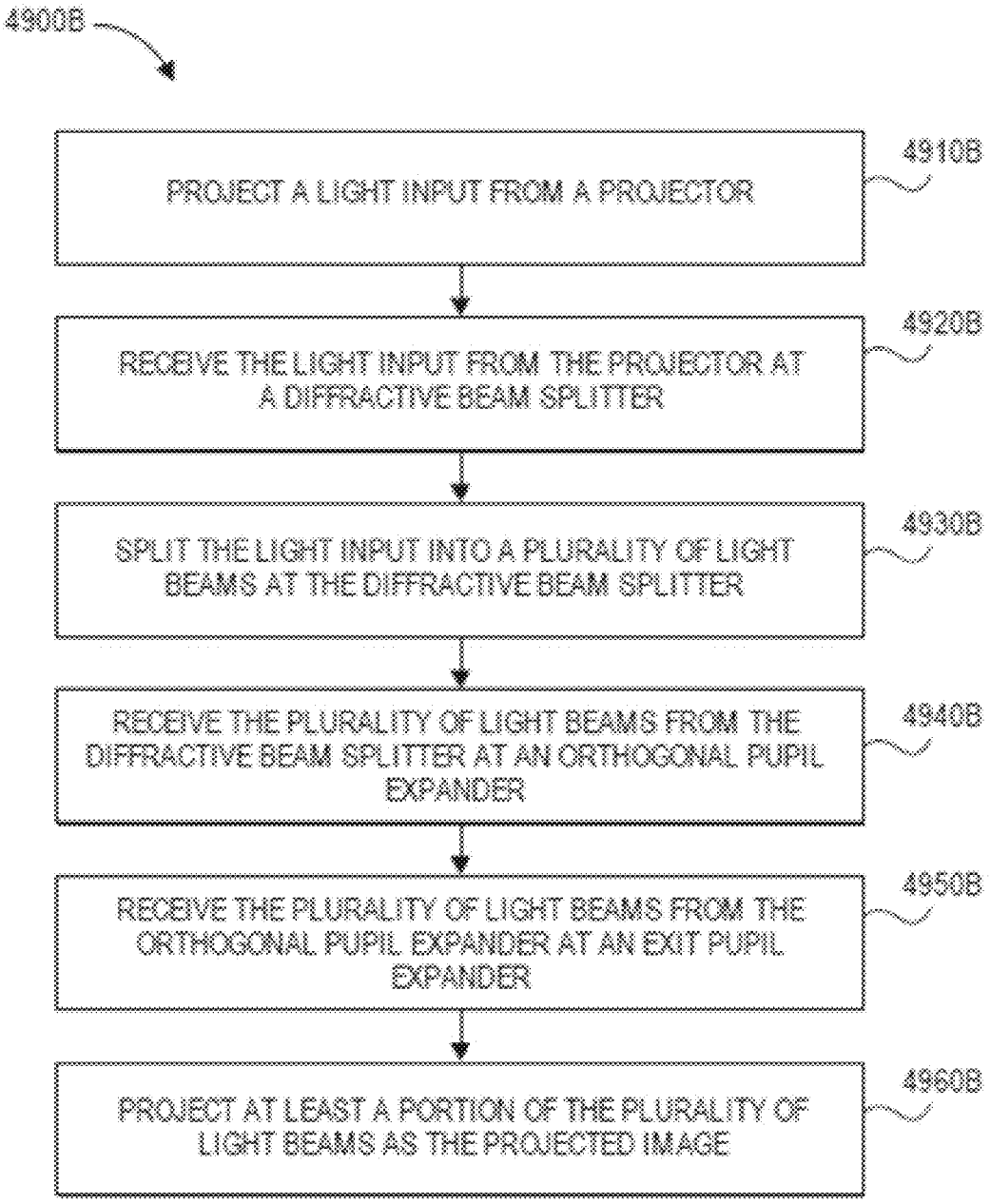
4900B
PROJECT A LIGHT INPUT FROM A PROJECTOR
4910B
RECEIVE THE LIGHT INPUT FROM THE PROJECTOR AT A DIFFRACTIVE BEAM SPLITTER
4920B
SPLIT THE LIGHT INPUT INTO A PLURALITY OF LIGHT BEAMS AT THE DIFFRACTIVE BEAM SPLITTER
4930B
RECEIVE THE PLURALITY OF LIGHT BEAMS FROM THE DIFFRACTIVE BEAM SPLITTER AT AN ORTHOGONAL PUPIL EXPANDER
4940B
RECEIVE THE PLURALITY OF LIGHT BEAMS FROM THE ORTHOGONAL PUPIL EXPANDER AT AN EXIT PUPIL EXPANDER
4950B
PROJECT AT LEAST A PORTION OF THE PLURALITY OF LIGHT BEAMS AS THE PROJECTED IMAGE
4960B

FIG. 49B

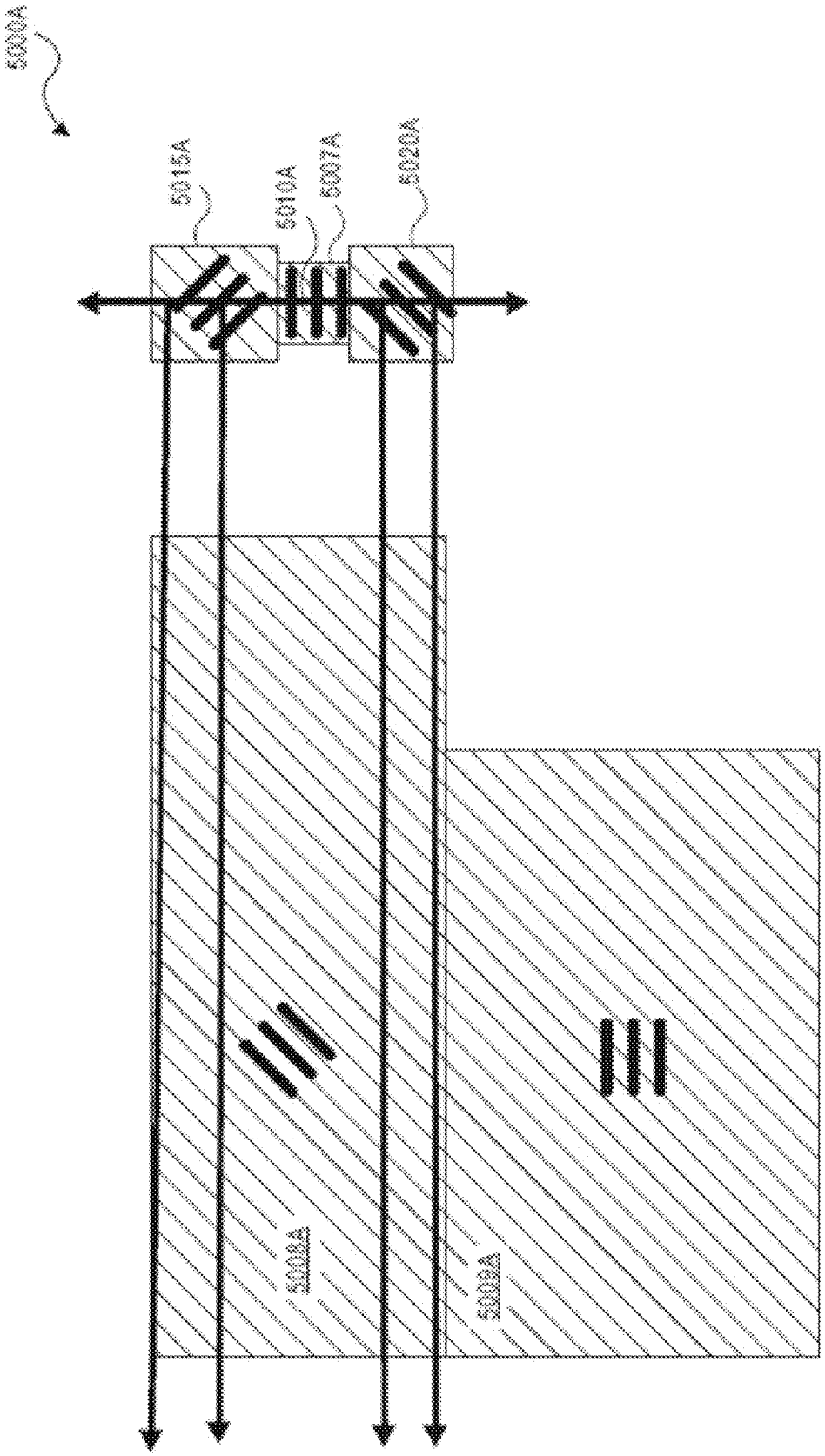

FIG. 50A

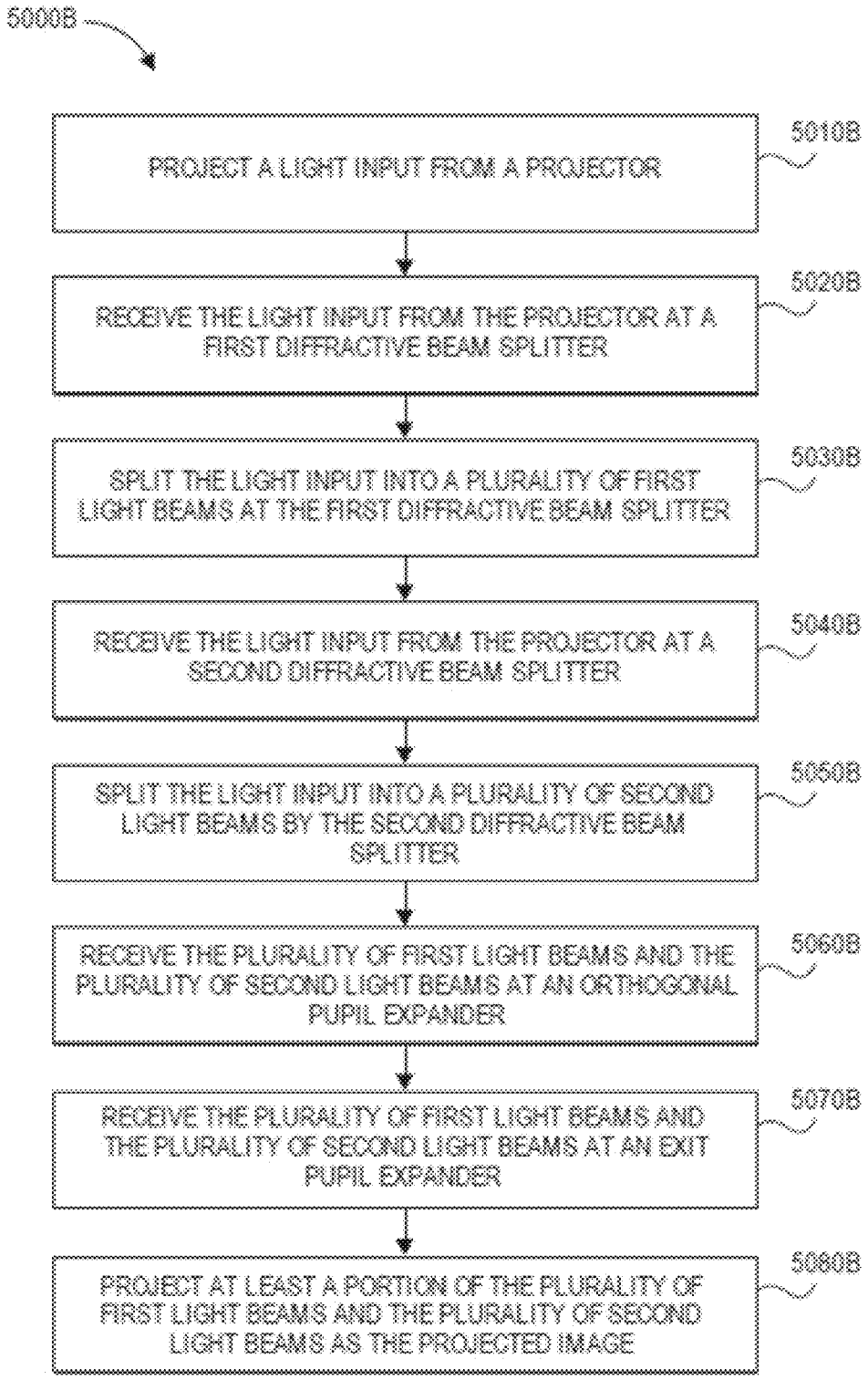
5000B
PROJECT A LIGHT INPUT FROM A PROJECTOR
5010B
RECEIVE THE LIGHT INPUT FROM THE PROJECTOR AT A FIRST DIFFRACTIVE BEAM SPLITTER
5020B
SPLIT THE LIGHT INPUT INTO A PLURALITY OF FIRST LIGHT BEAMS AT THE FIRST DIFFRACTIVE BEAM SPLITTER
5030B
RECEIVE THE LIGHT INPUT FROM THE PROJECTOR AT A SECOND DIFFRACTIVE BEAM SPLITTER
5040B
SPLIT THE LIGHT INPUT INTO A PLURALITY OF SECOND LIGHT BEAMS BY THE SECOND DIFFRACTIVE BEAM SPLITTER
5050B
RECEIVE THE PLURALITY OF FIRST LIGHT BEAMS AND THE PLURALITY OF SECOND LIGHT BEAMS AT AN ORTHOGONAL PUPIL EXPANDER
5060B
RECEIVE THE PLURALITY OF FIRST LIGHT BEAMS AND THE PLURALITY OF SECOND LIGHT BEAMS AT AN EXIT PUPIL EXPANDER
5070B
PROJECT AT LEAST A PORTION OF THE PLURALITY OF FIRST LIGHT BEAMS AND THE PLURALITY OF SECOND LIGHT BEAMS AS THE PROJECTED IMAGE
5080B

FIG. 50B

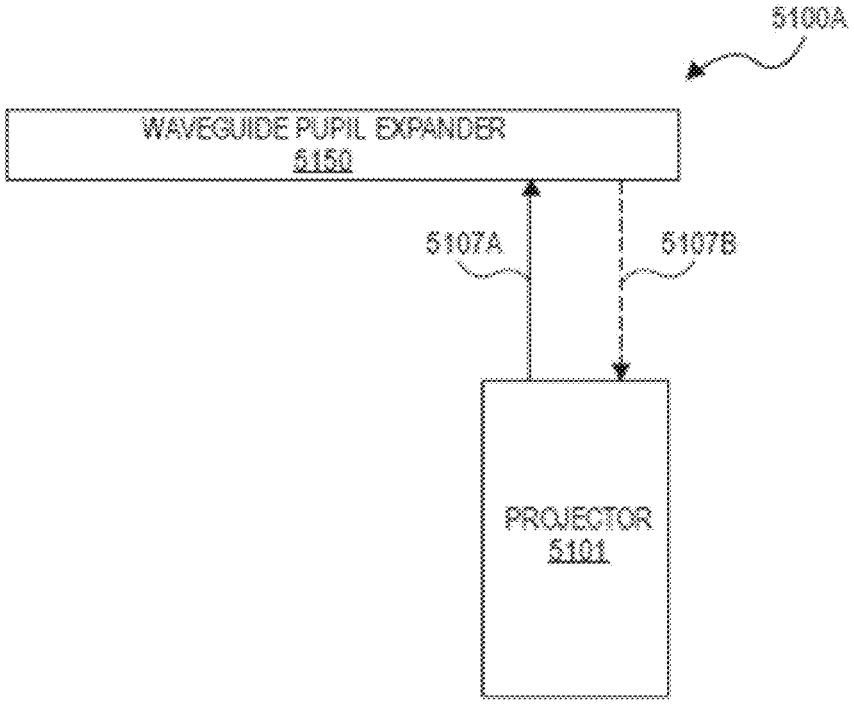

FIG. 51A

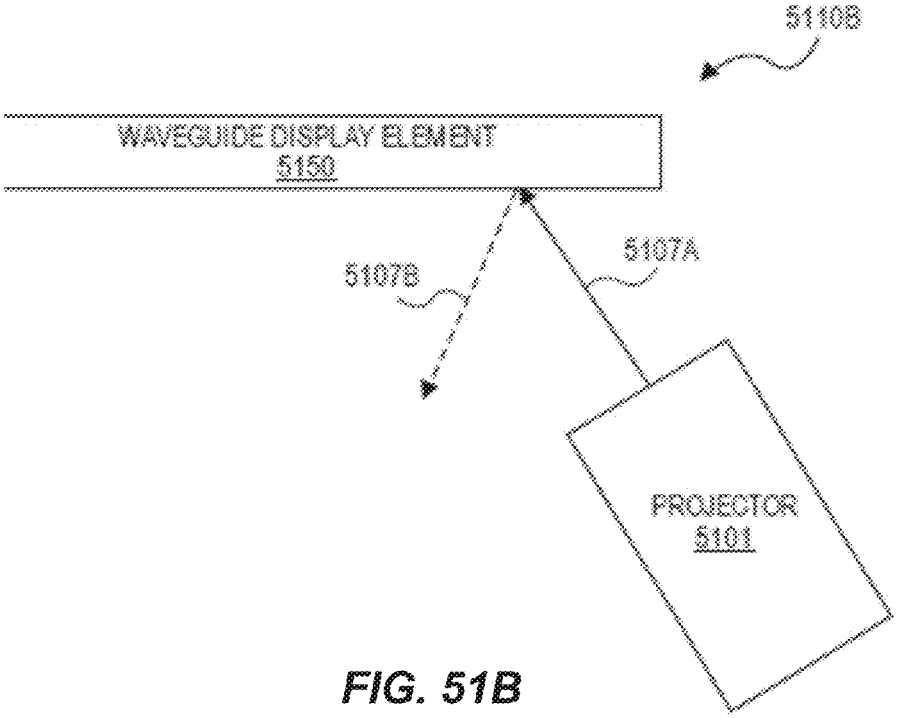

FIG. 51B

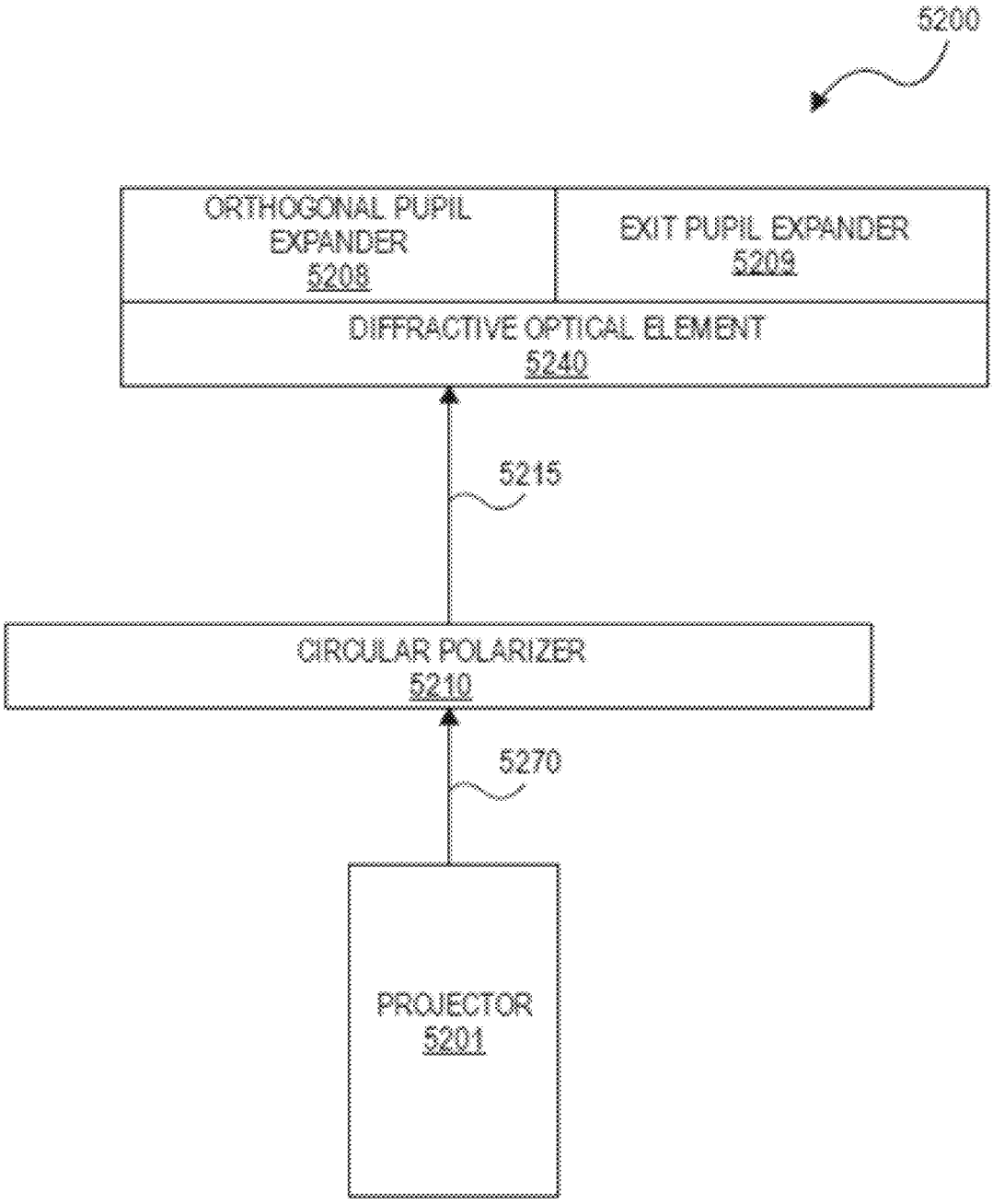
5200
ORTHOGONAL PUPIL EXPANDER 5208
EXIT PUPIL EXPANDER 5209
DIFFRACTIVE OPTICAL ELEMENT 5240
5215
CIRCULAR POLARIZER 5210
5270
PROJECTOR 5201

FIG. 52

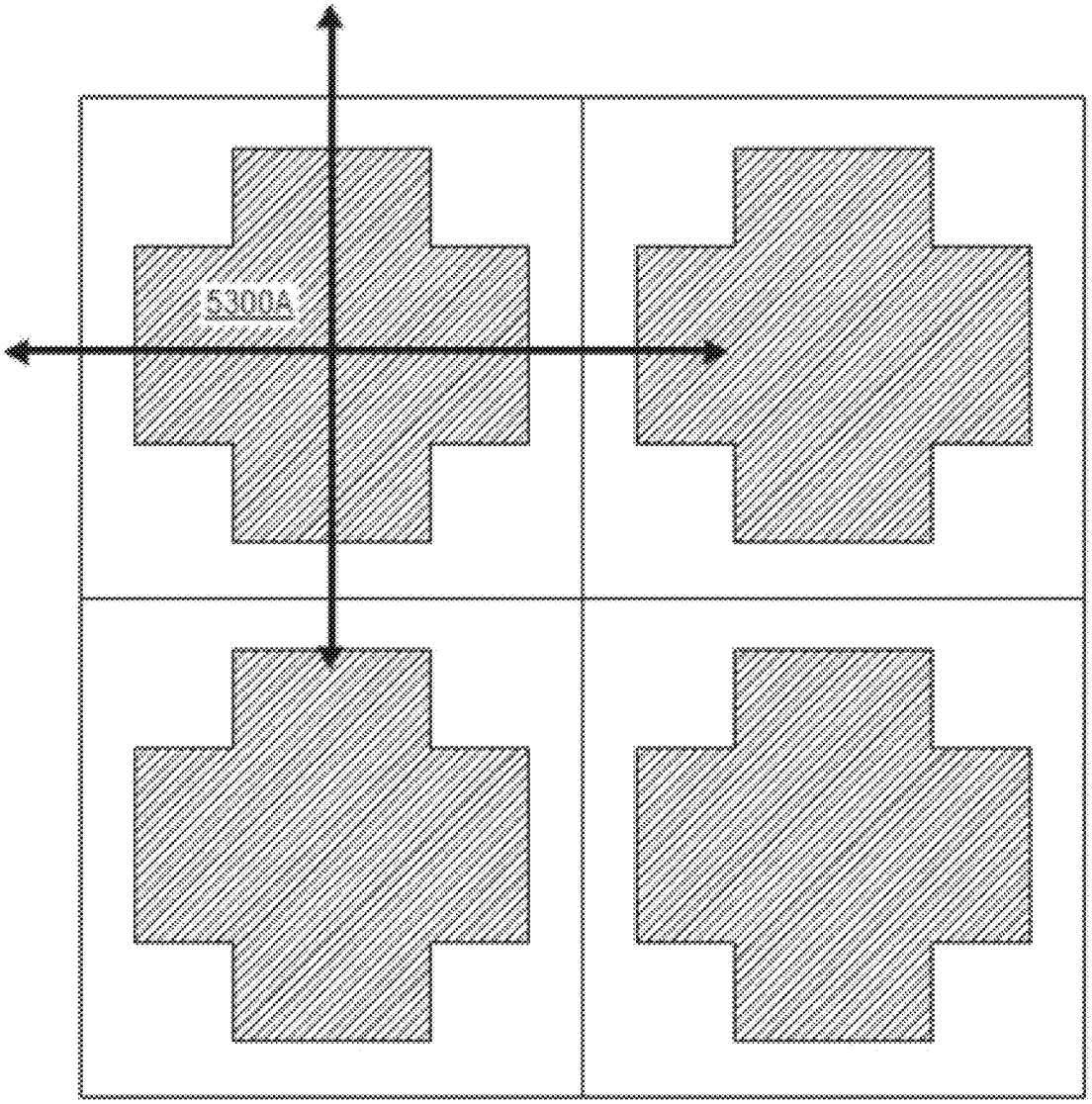

FIG. 53A

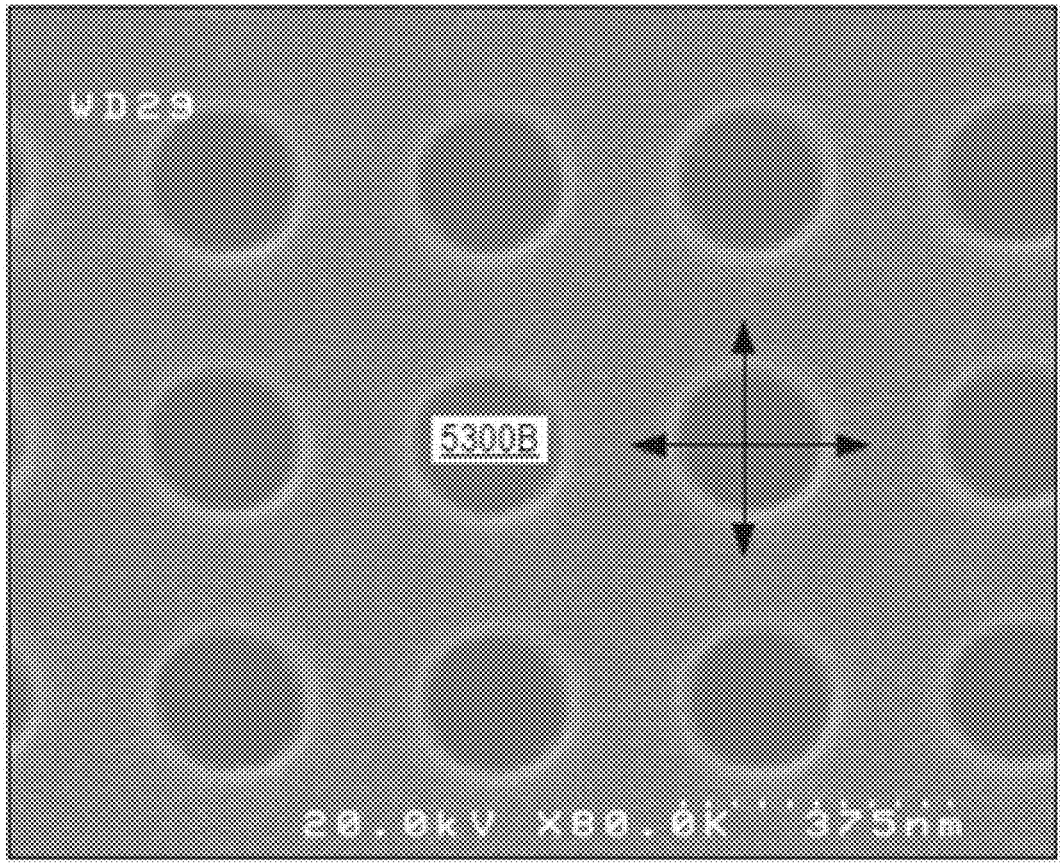

FIG. 53B

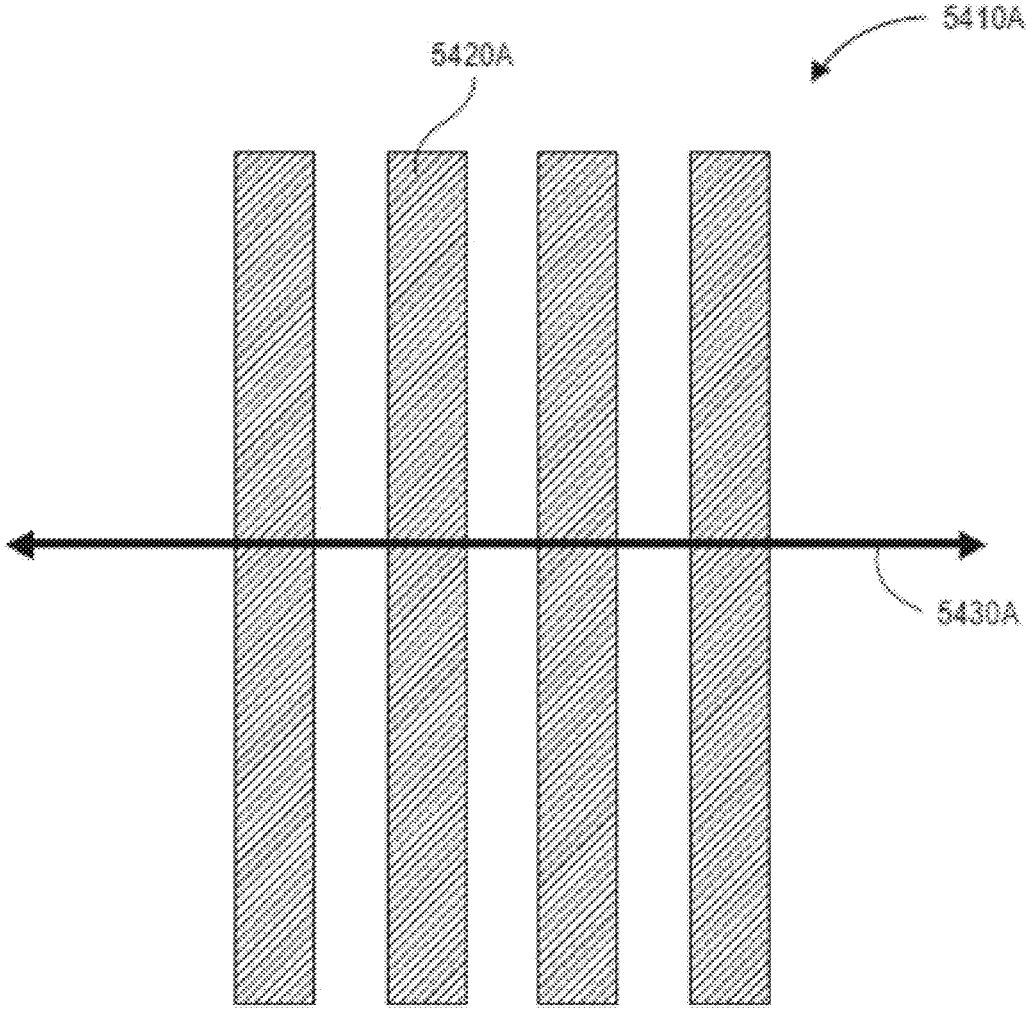

FIG. 54A

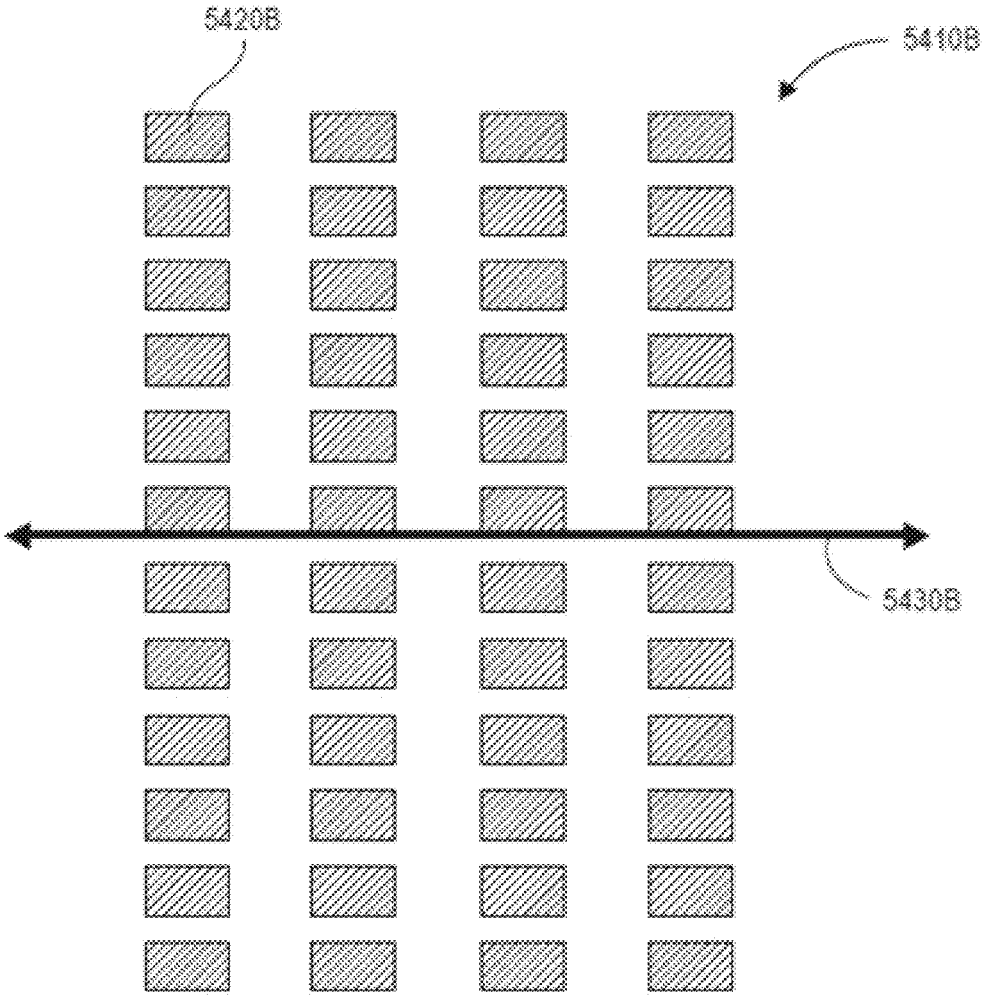

FIG. 54B

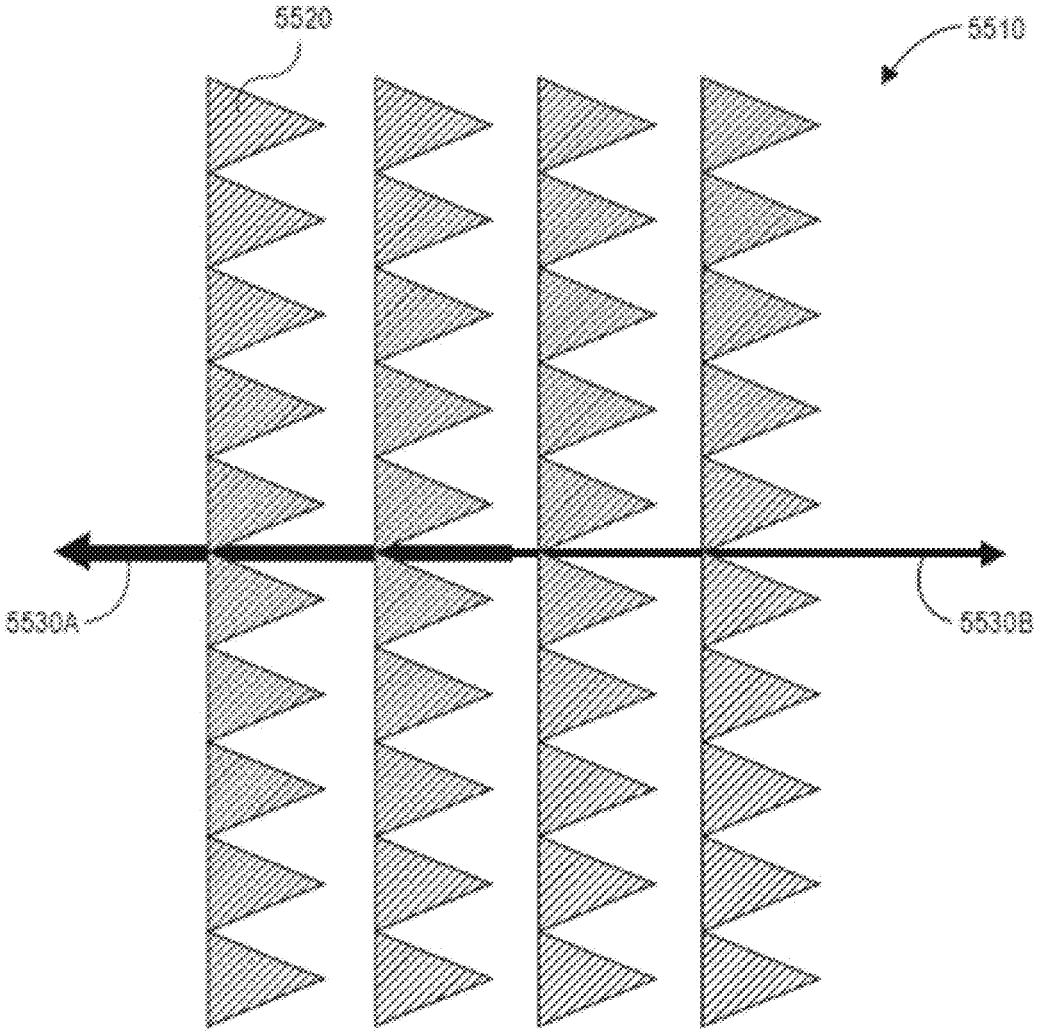

FIG. 55

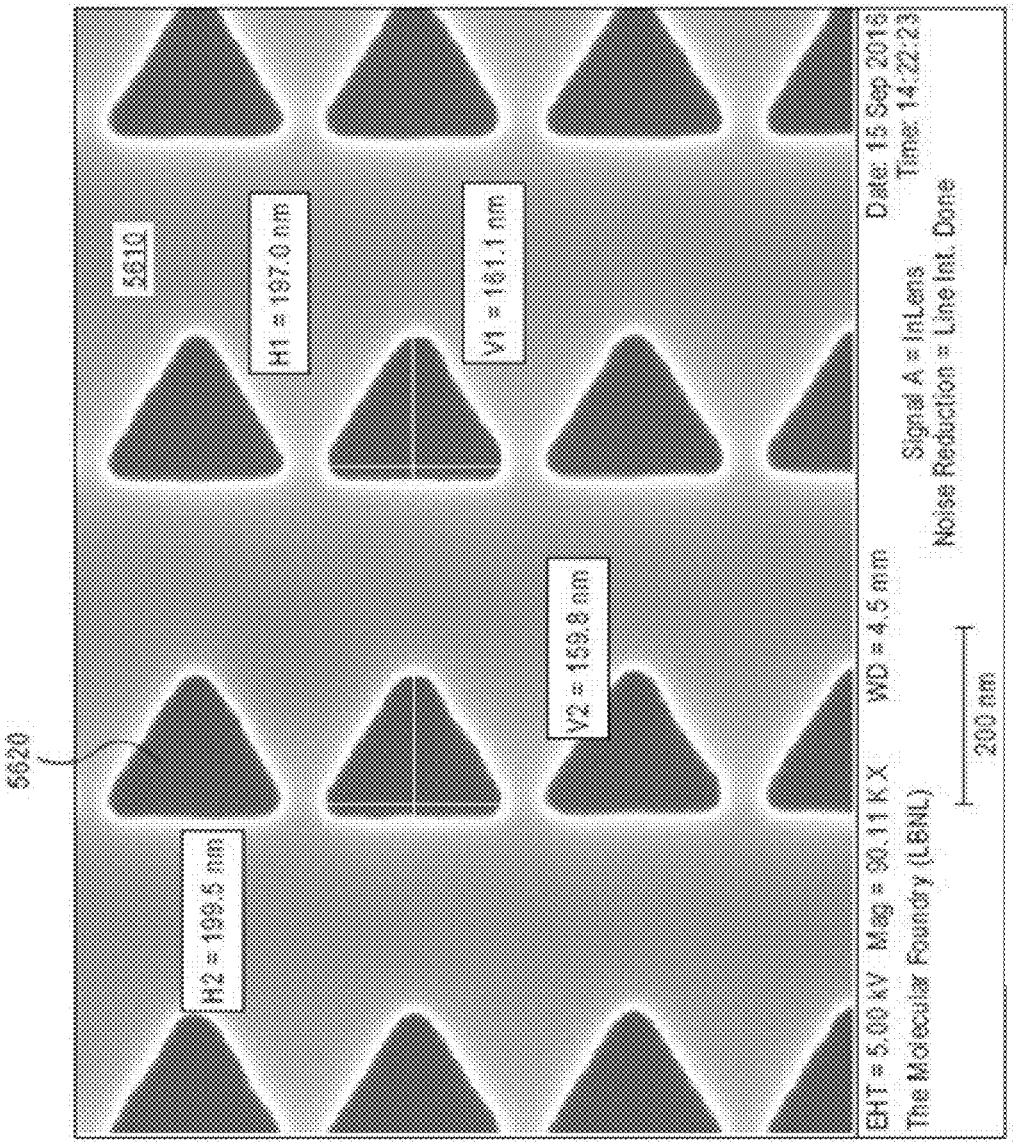
5620
5610
H1 = 197.0 nm
V1 = 181.1 nm
H2 = 199.5 nm
V2 = 159.8 nm
EHT = 5.00 kV Mag = 20.11 K X WD = 4.5 mm
The Molecular Foundry (LBNL)
200 nm
Signal A = InLens
Noise Reduction = Line Int. Done
Date: 15 Sep 2016
Time: 14:22:23

FIG. 56

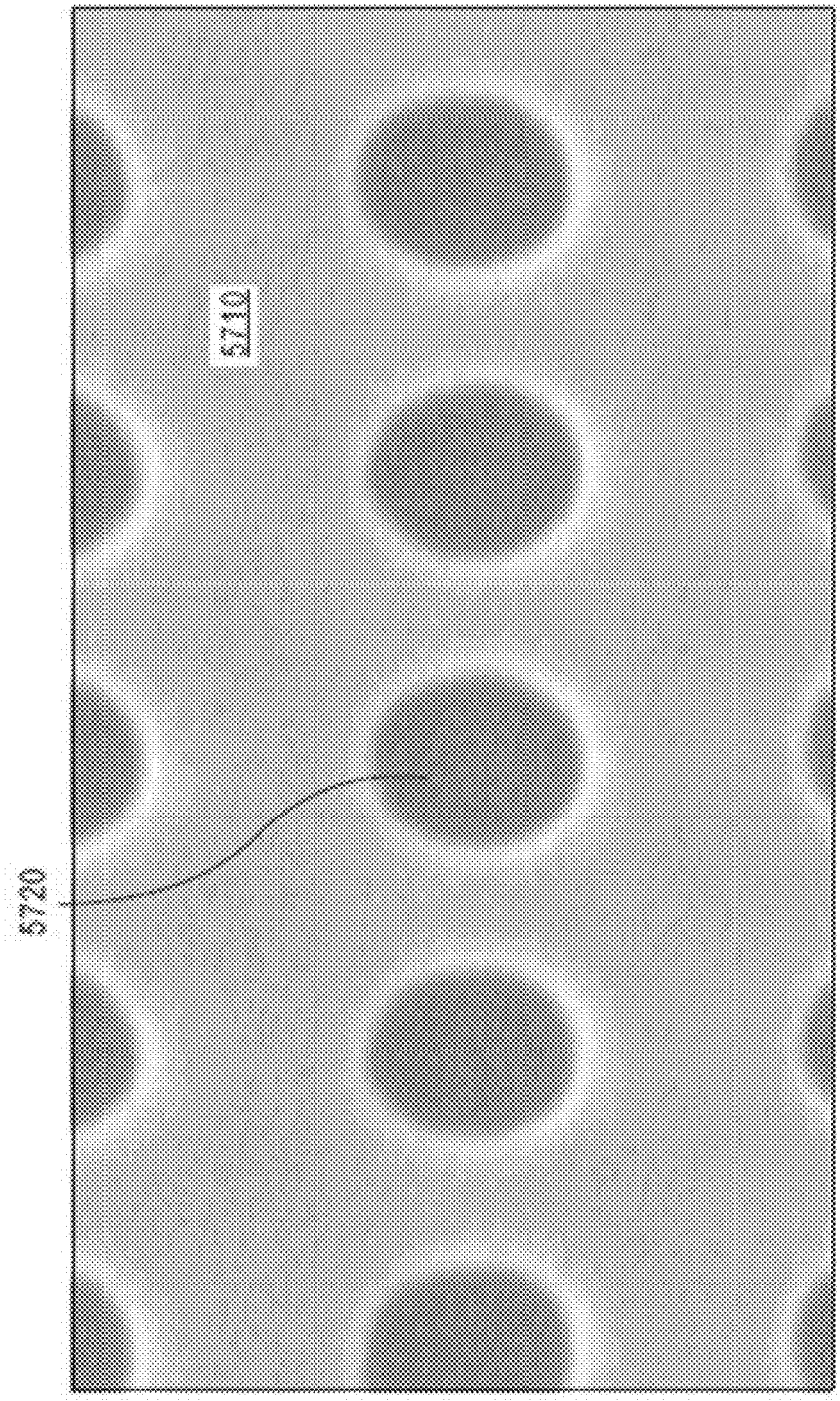

FIG. 57

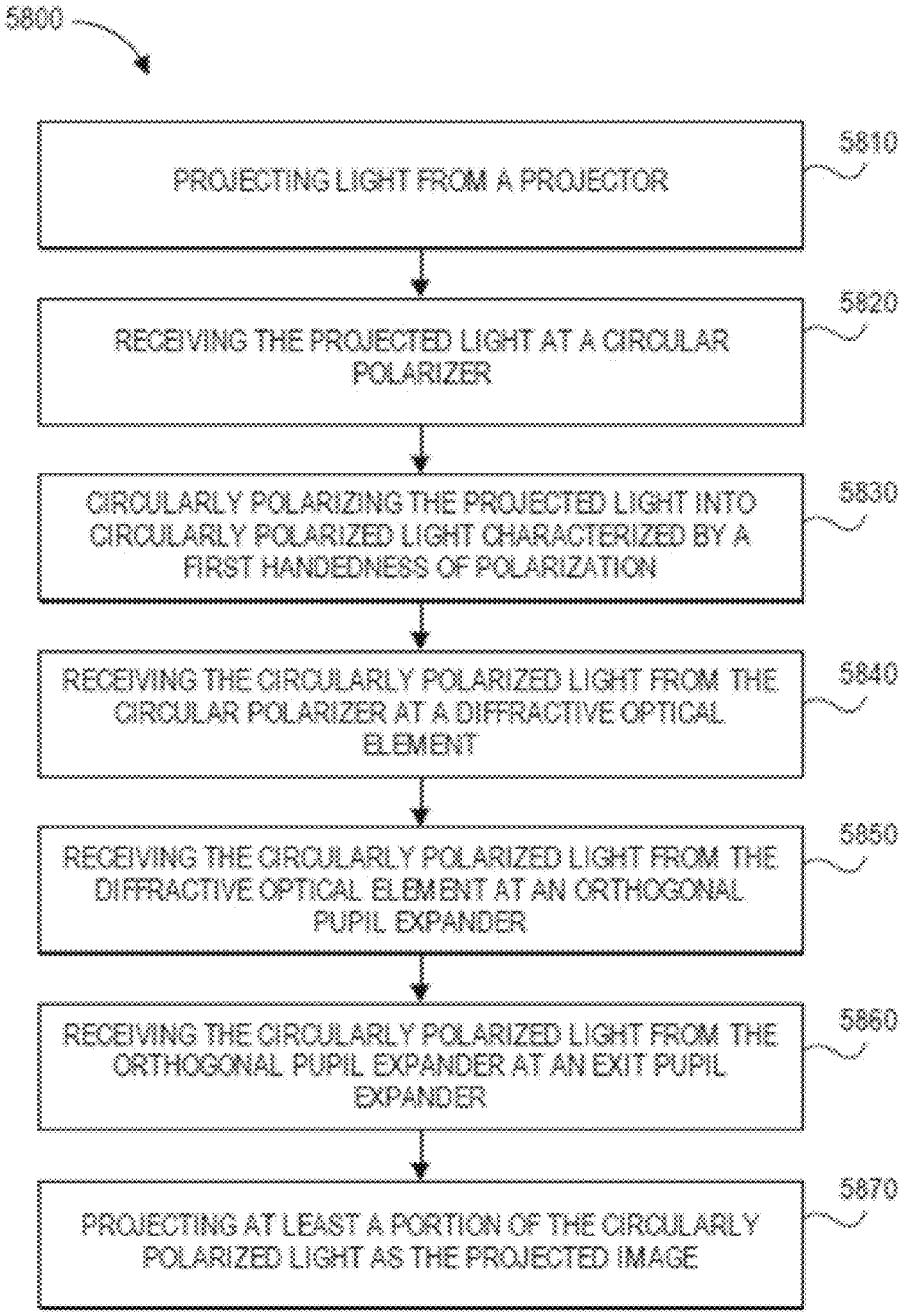
5800
PROJECTING LIGHT FROM A PROJECTOR
5810
RECEIVING THE PROJECTED LIGHT AT A CIRCULAR POLARIZER
5820
CIRCULARLY POLARIZING THE PROJECTED LIGHT INTO CIRCULARLY POLARIZED LIGHT CHARACTERIZED BY A FIRST HANDEDNESS OF POLARIZATION
5830
RECEIVING THE CIRCULARLY POLARIZED LIGHT FROM THE CIRCULAR POLARIZER AT A DIFFRACTIVE OPTICAL ELEMENT
5840
RECEIVING THE CIRCULARLY POLARIZED LIGHT FROM THE DIFFRACTIVE OPTICAL ELEMENT AT AN ORTHOGONAL PUPIL EXPANDER
5850
RECEIVING THE CIRCULARLY POLARIZED LIGHT FROM THE ORTHOGONAL PUPIL EXPANDER AT AN EXIT PUPIL EXPANDER
5860
PROJECTING AT LEAST A PORTION OF THE CIRCULARLY POLARIZED LIGHT AS THE PROJECTED IMAGE
5870

FIG. 58

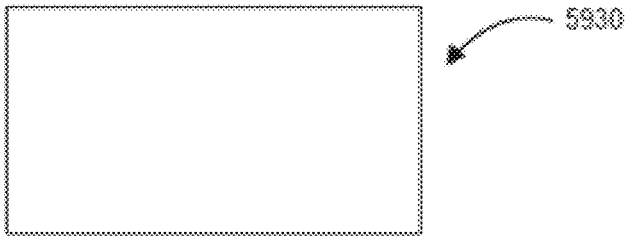

FIG. 59A

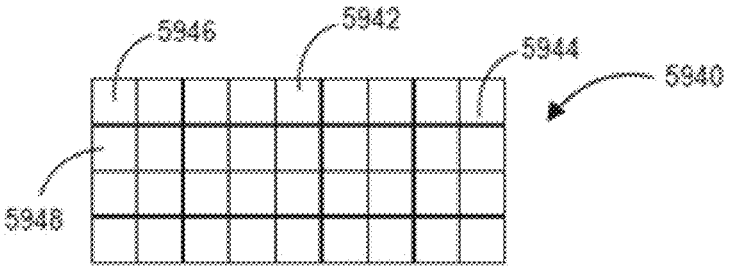

FIG. 59B

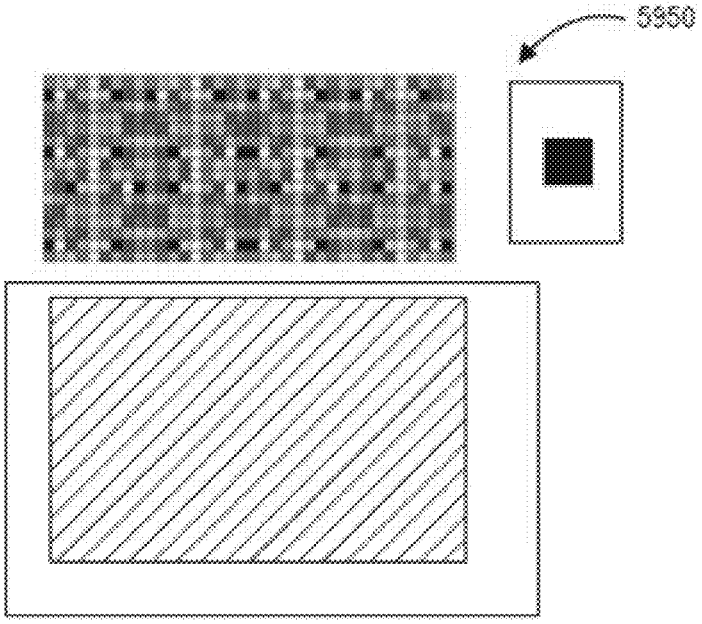

FIG. 59C

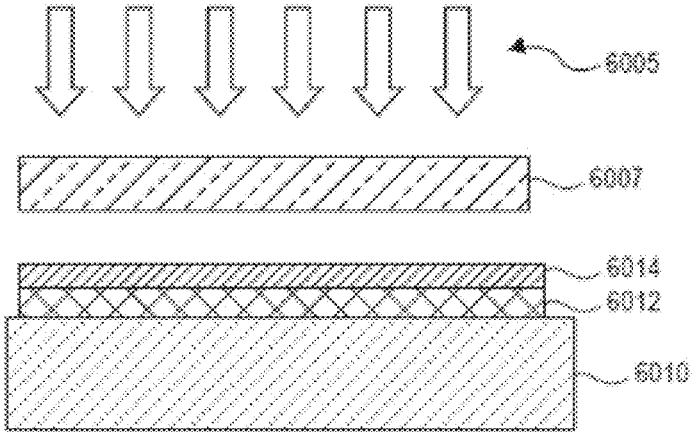

FIG. 60A

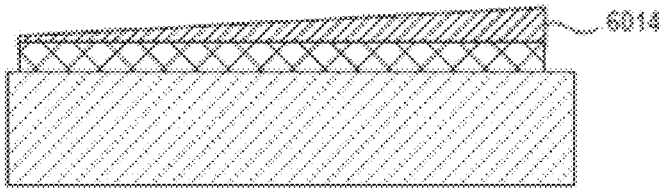

FIG. 60B

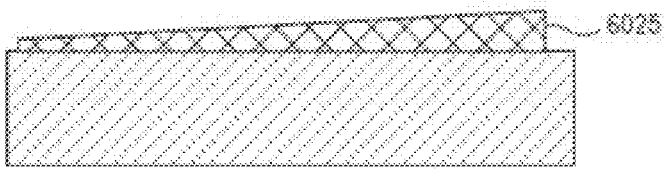

FIG. 60C

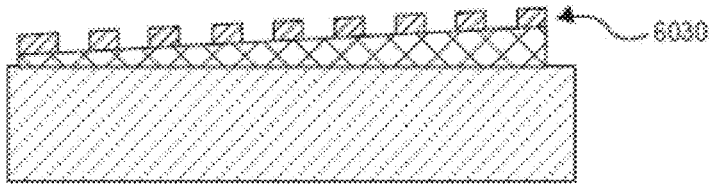

FIG. 60D

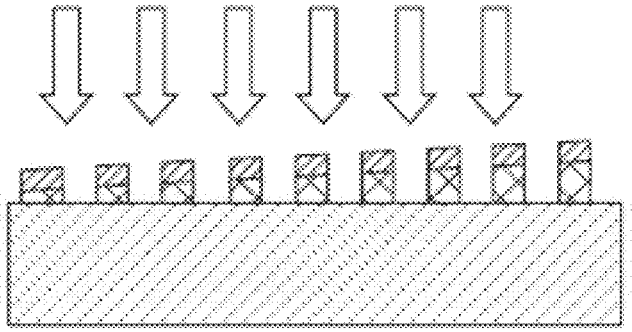

FIG. 60E

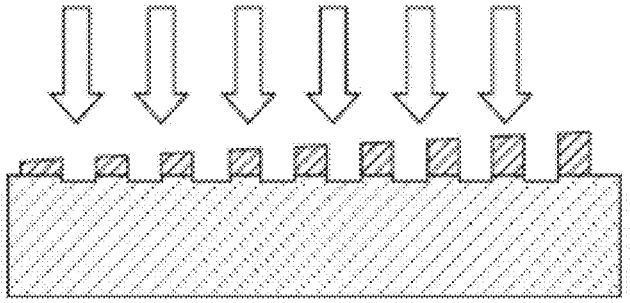

FIG. 60F

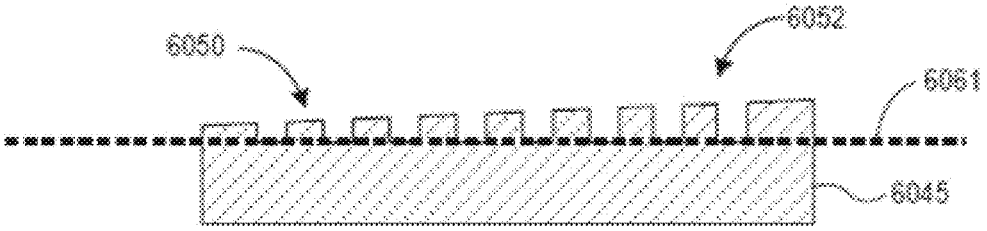

FIG. 60G

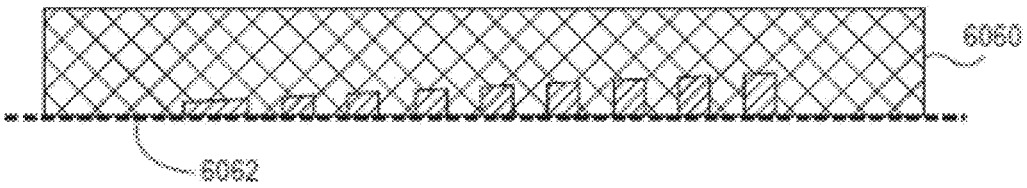

FIG. 60H

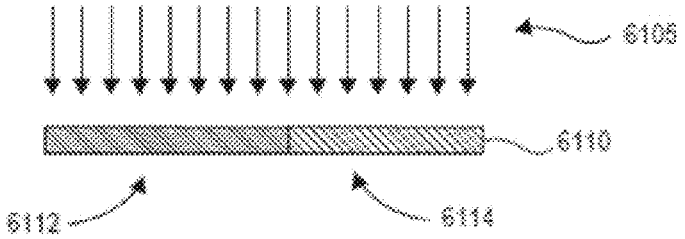

FIG. 61A

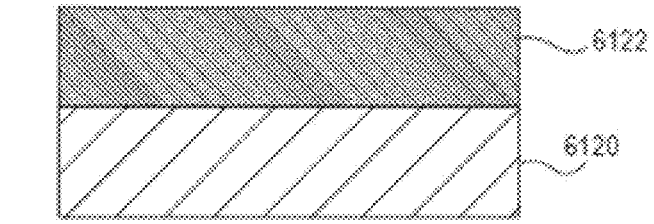

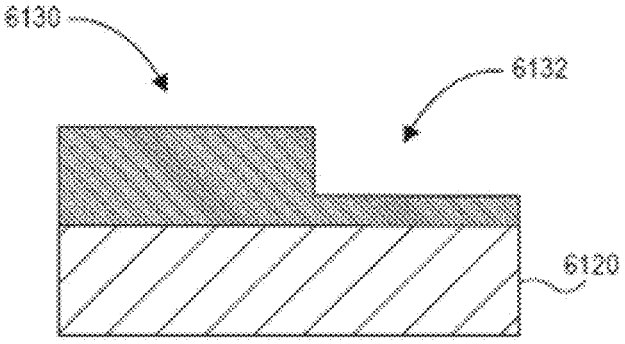

FIG. 61B

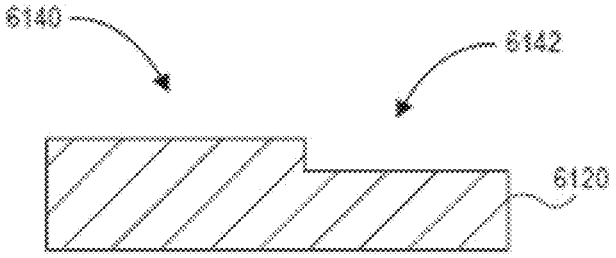

FIG. 61C

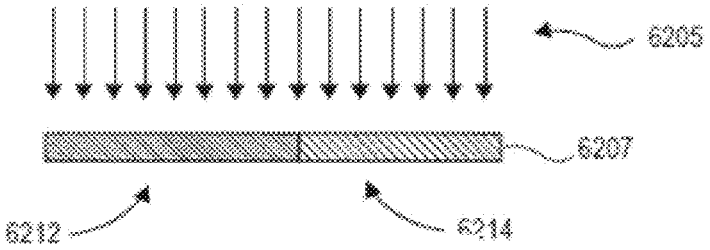

FIG. 62A

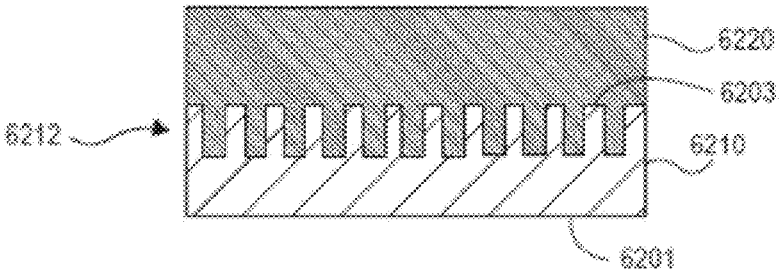

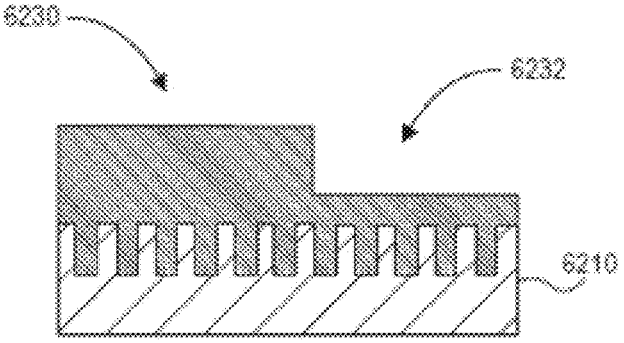

FIG. 62B

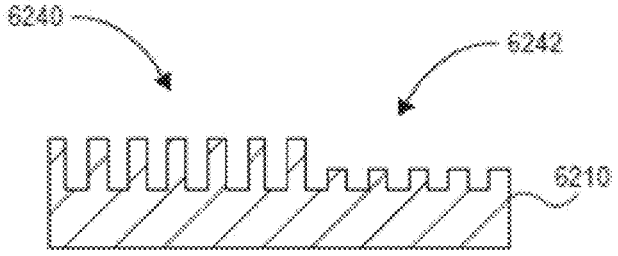

FIG. 62C

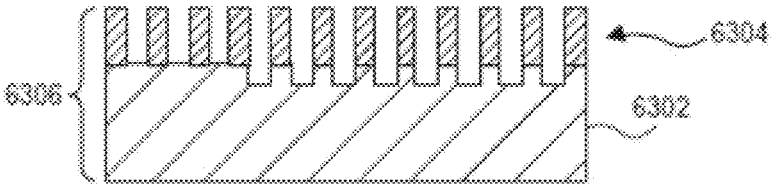

FIG. 63A

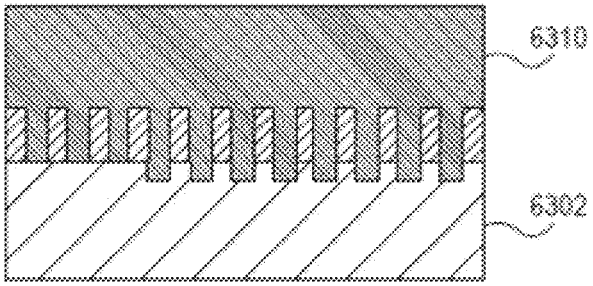

FIG. 63B

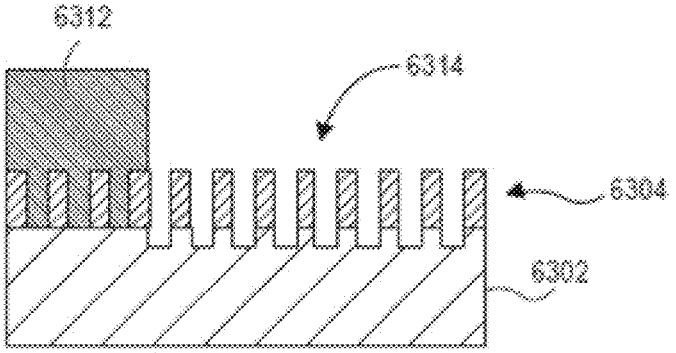

FIG. 63C

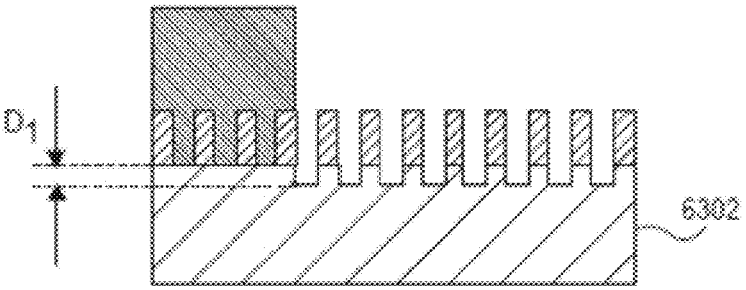

FIG. 63D

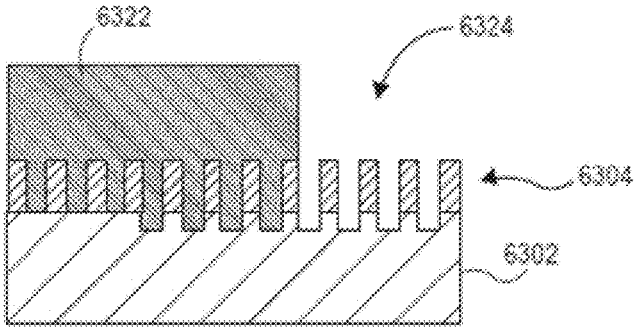

FIG. 63E

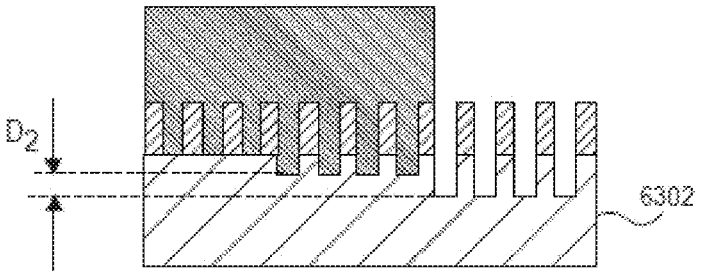

FIG. 63F

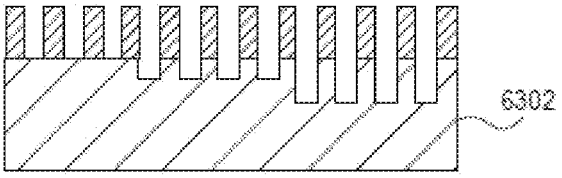

FIG. 63G

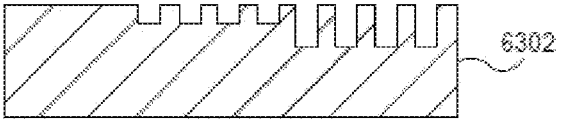

FIG. 63H

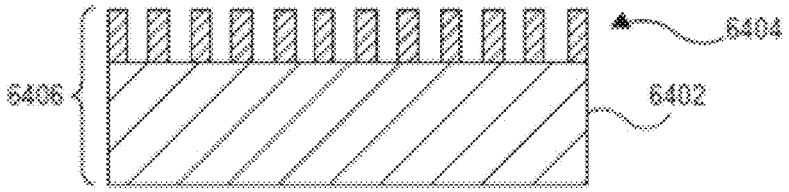

FIG. 64A

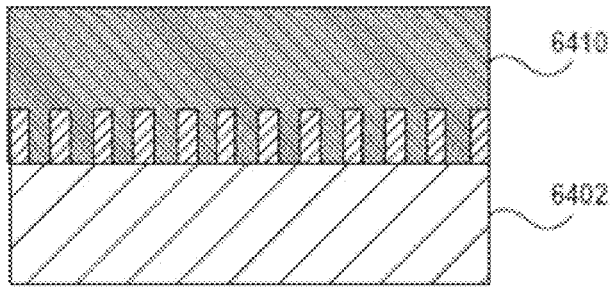

FIG. 64B

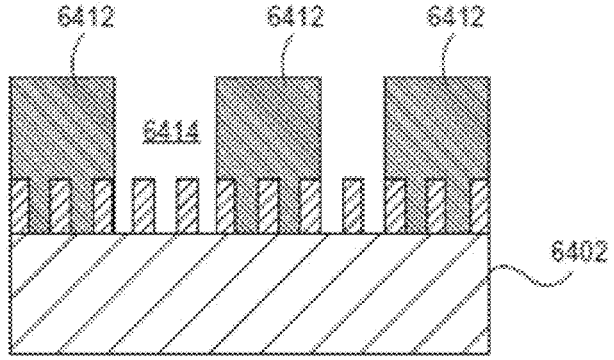

FIG. 64C

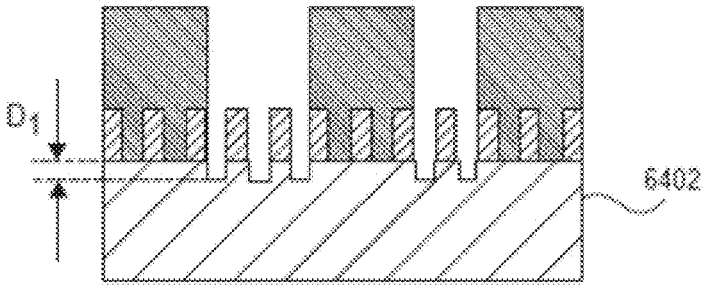

FIG. 64D

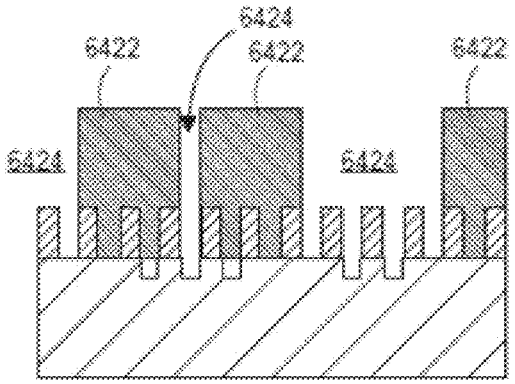

FIG. 64E

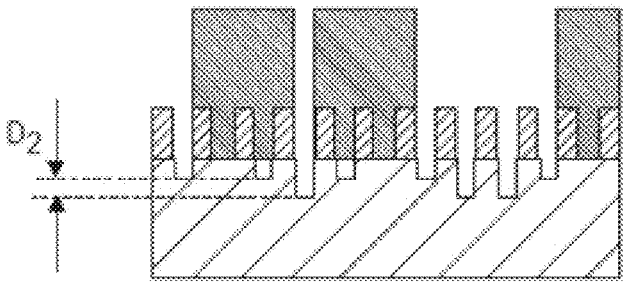

FIG. 64F

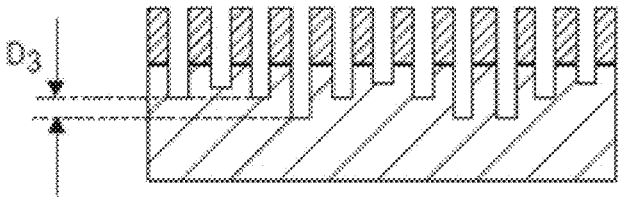

FIG. 64G

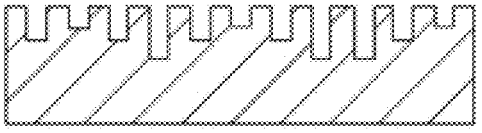

FIG. 64H

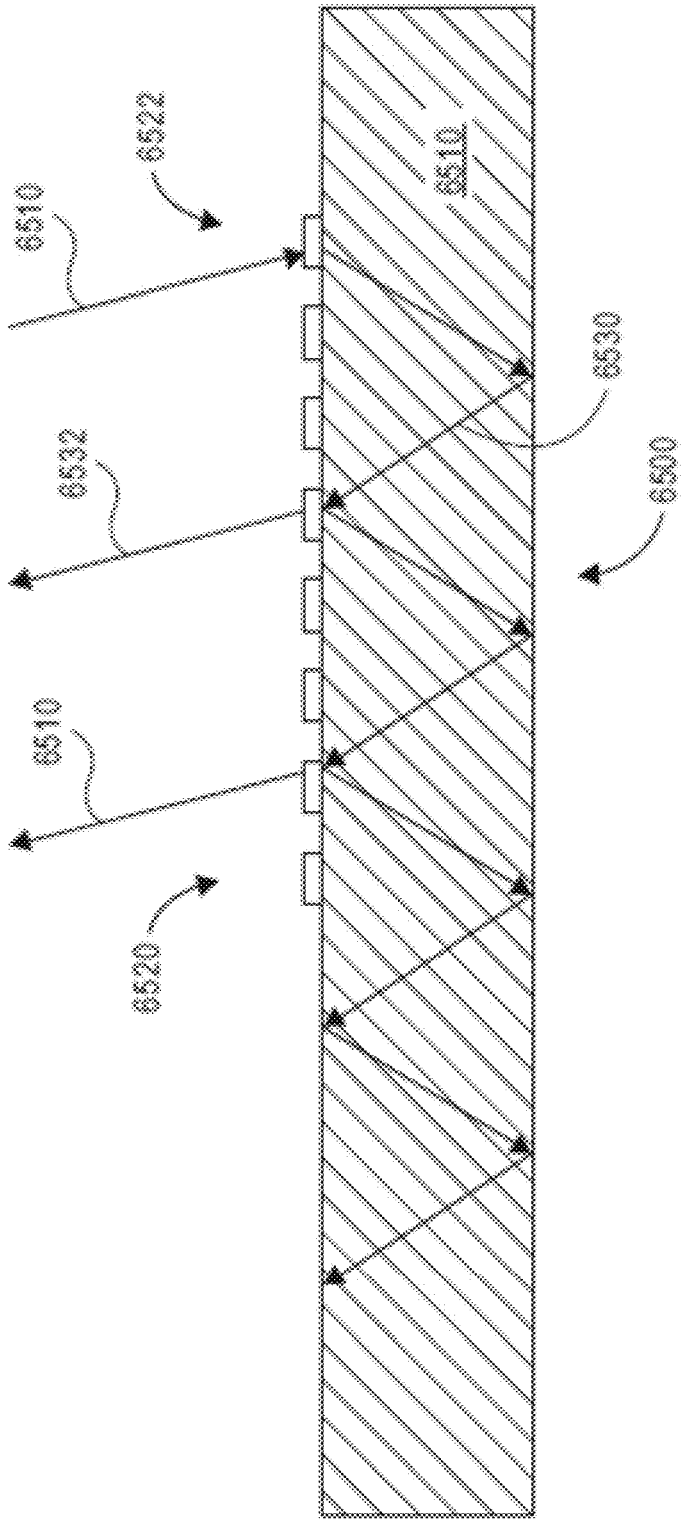

FIG. 65

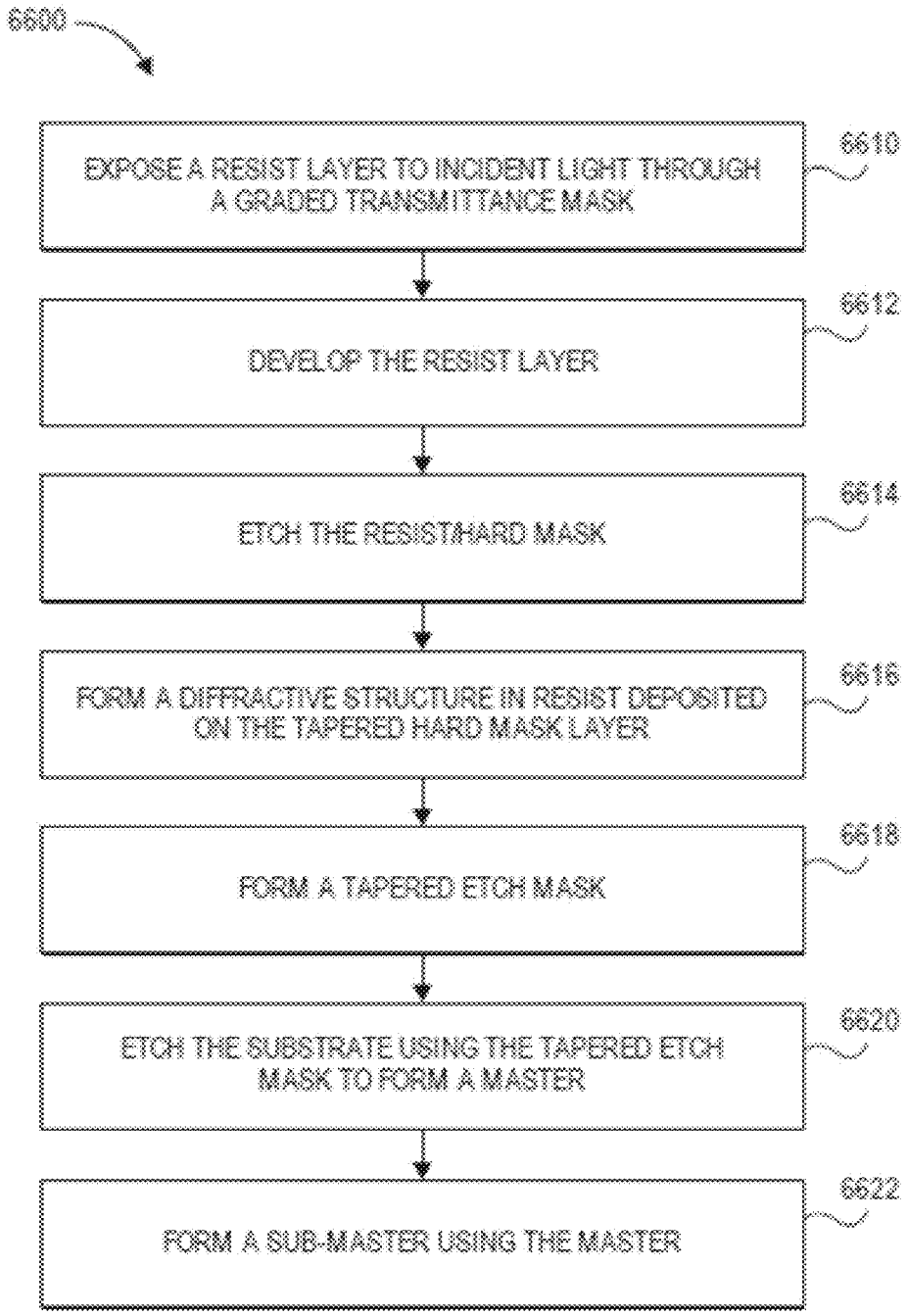
6600
EXPOSE A RESIST LAYER TO INCIDENT LIGHT THROUGH A GRADED TRANSMITTANCE MASK
6610
DEVELOP THE RESIST LAYER
6612
ETCH THE RESIST/HARD MASK
6614
FORM A DIFFRACTIVE STRUCTURE IN RESIST DEPOSITED ON THE TAPERED HARD MASK LAYER
6616
FORM A TAPERED ETCH MASK
6618
ETCH THE SUBSTRATE USING THE TAPERED ETCH MASK TO FORM A MASTER
6620
FORM A SUB-MASTER USING THE MASTER
6622

FIG. 66

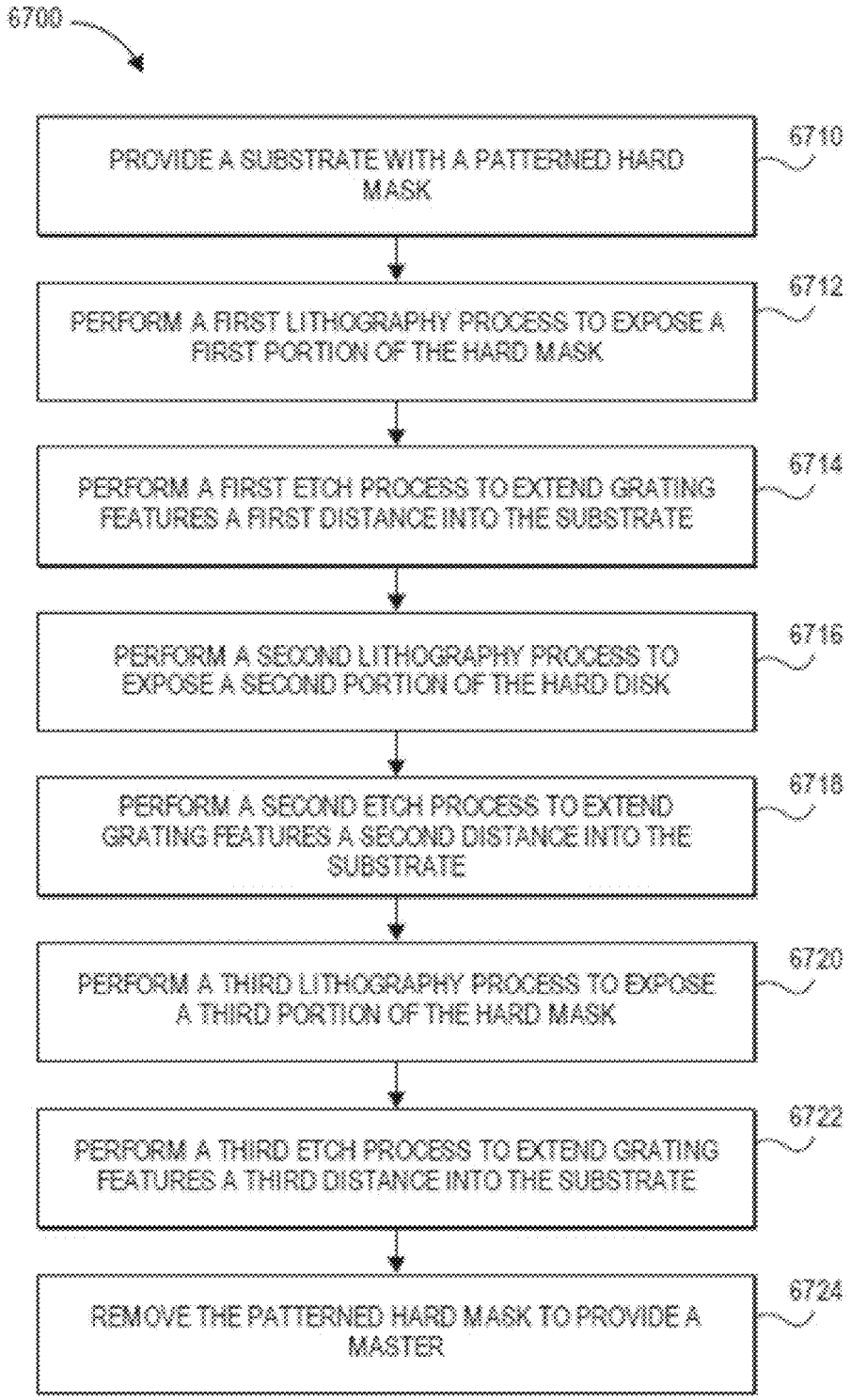
6700
PROVIDE A SUBSTRATE WITH A PATTERNED HARD MASK
6710
PERFORM A FIRST LITHOGRAPHY PROCESS TO EXPOSE A FIRST PORTION OF THE HARD MASK
6712
PERFORM A FIRST ETCH PROCESS TO EXTEND GRATING FEATURES A FIRST DISTANCE INTO THE SUBSTRATE
6714
PERFORM A SECOND LITHOGRAPHY PROCESS TO EXPOSE A SECOND PORTION OF THE HARD DISK
6716
PERFORM A SECOND ETCH PROCESS TO EXTEND GRATING FEATURES A SECOND DISTANCE INTO THE SUBSTRATE
6718
PERFORM A THIRD LITHOGRAPHY PROCESS TO EXPOSE A THIRD PORTION OF THE HARD MASK
6720
PERFORM A THIRD ETCH PROCESS TO EXTEND GRATING FEATURES A THIRD DISTANCE INTO THE SUBSTRATE
6722
REMOVE THE PATTERNED HARD MASK TO PROVIDE A MASTER
6724

FIG. 67

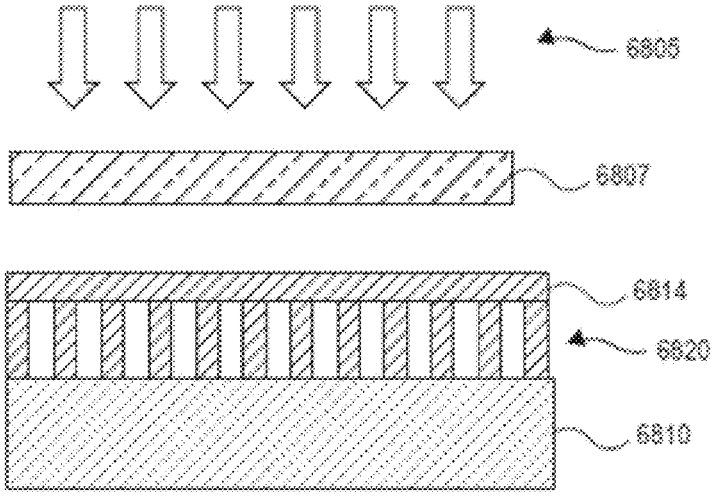

FIG. 68A

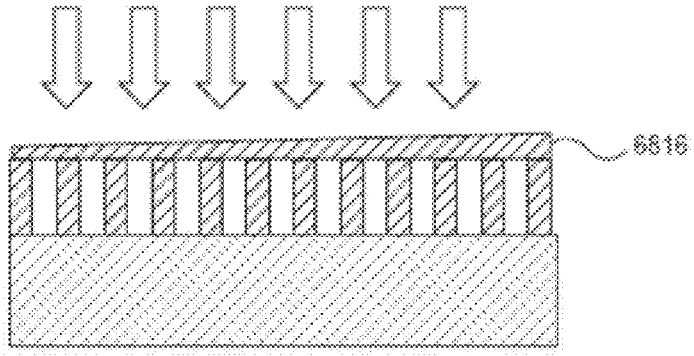

FIG. 68B

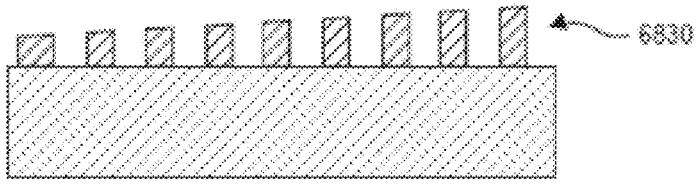

FIG. 68C

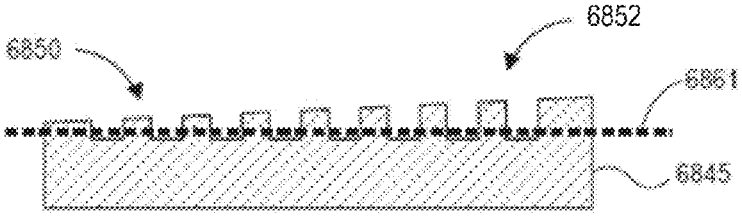

FIG. 68D

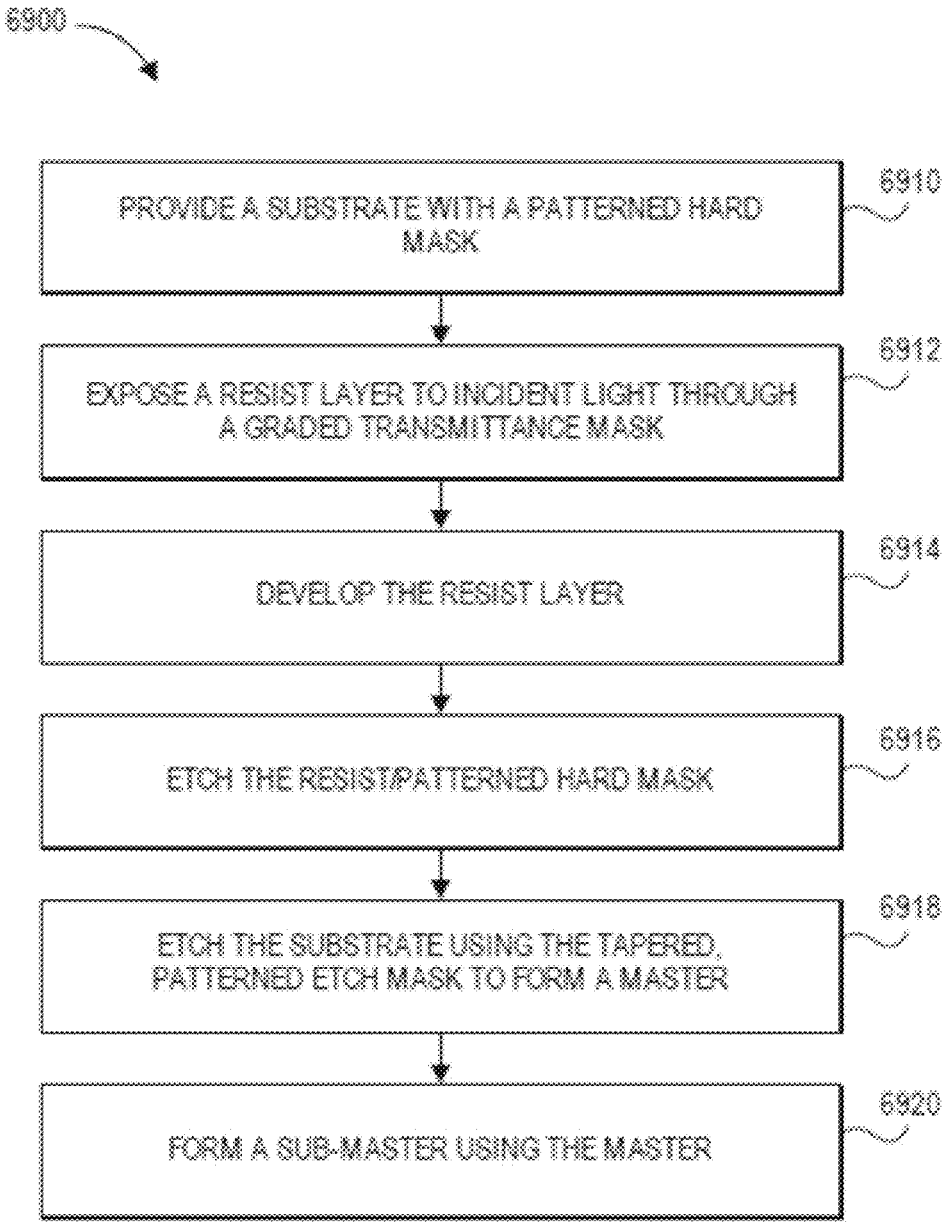
6900
PROVIDE A SUBSTRATE WITH A PATTERNED HARD MASK
6910
EXPOSE A RESIST LAYER TO INCIDENT LIGHT THROUGH A GRADED TRANSMITTANCE MASK
6912
DEVELOP THE RESIST LAYER
6914
ETCH THE RESIST/PATTERNED HARD MASK
6916
ETCH THE SUBSTRATE USING THE TAPERED, PATTERNED ETCH MASK TO FORM A MASTER
6918
FORM A SUB-MASTER USING THE MASTER
6920

FIG. 69

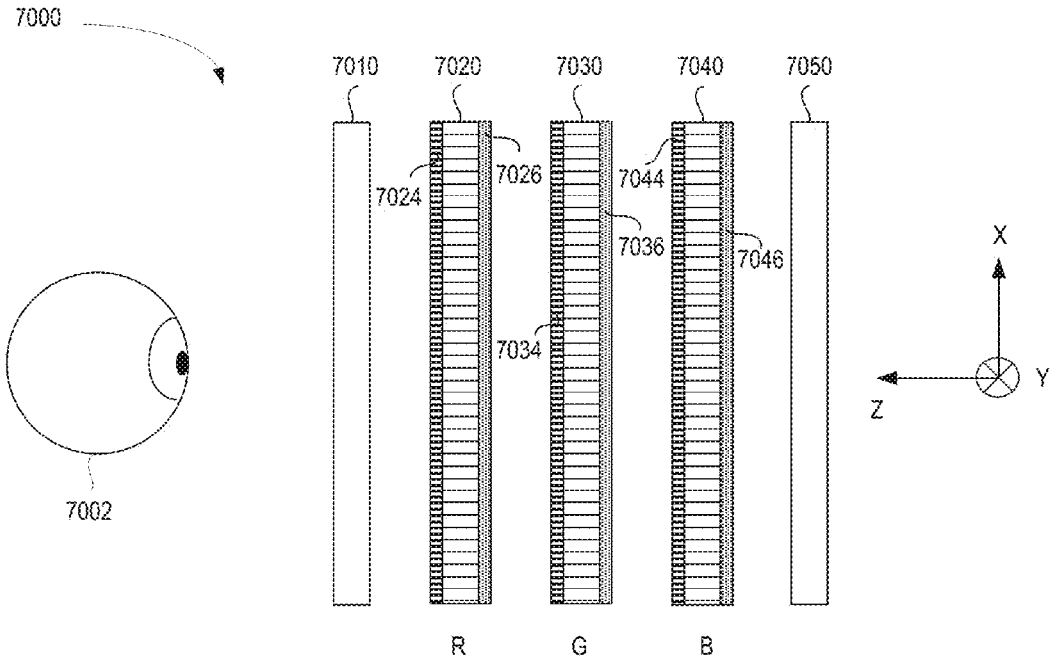
7000
7010
7020
7030
7040
7050
7024
7026
7044
7036
7046
7034
7002
X
Y
Z
R
G
B

FIG. 70

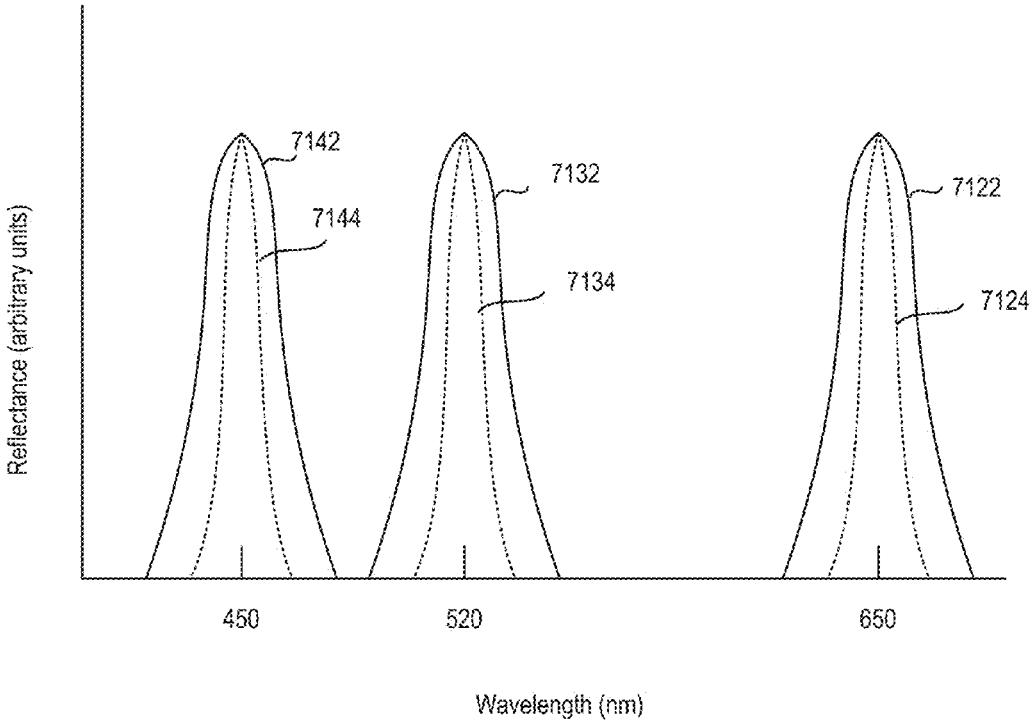
7142
7144
7132
7134
7122
7124
Reflectance (arbitrary units)
450
520
650
Wavelength (nm)

FIG. 71

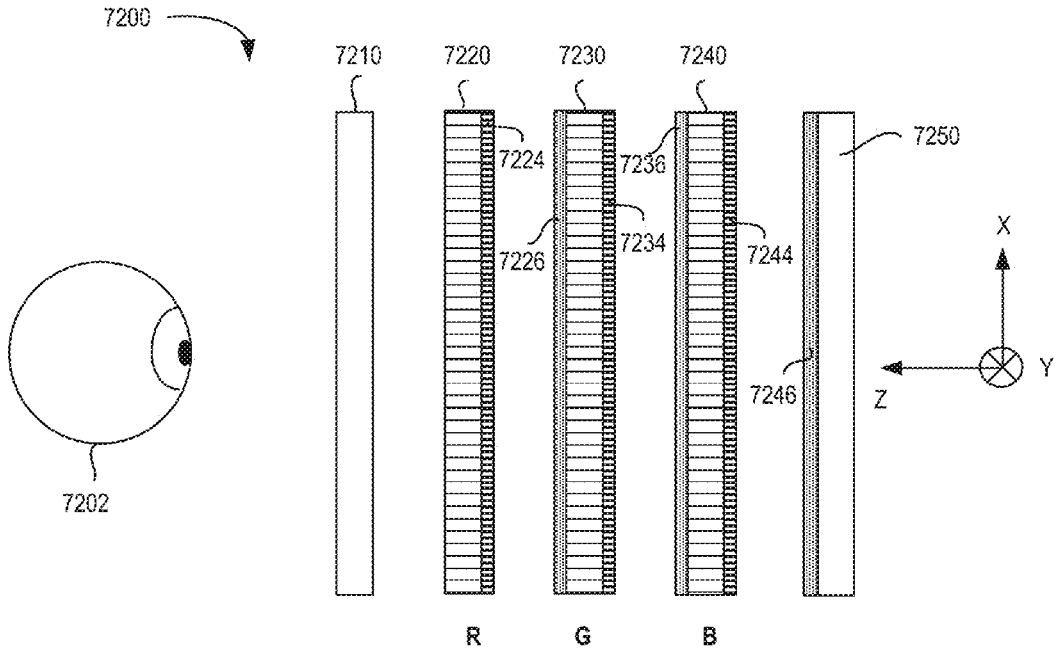
7200
7210
7220
7230
7240
7224
7236
7250
7226
7234
7244
X
Y
Z
7246
7202
R
G
B

FIG. 72

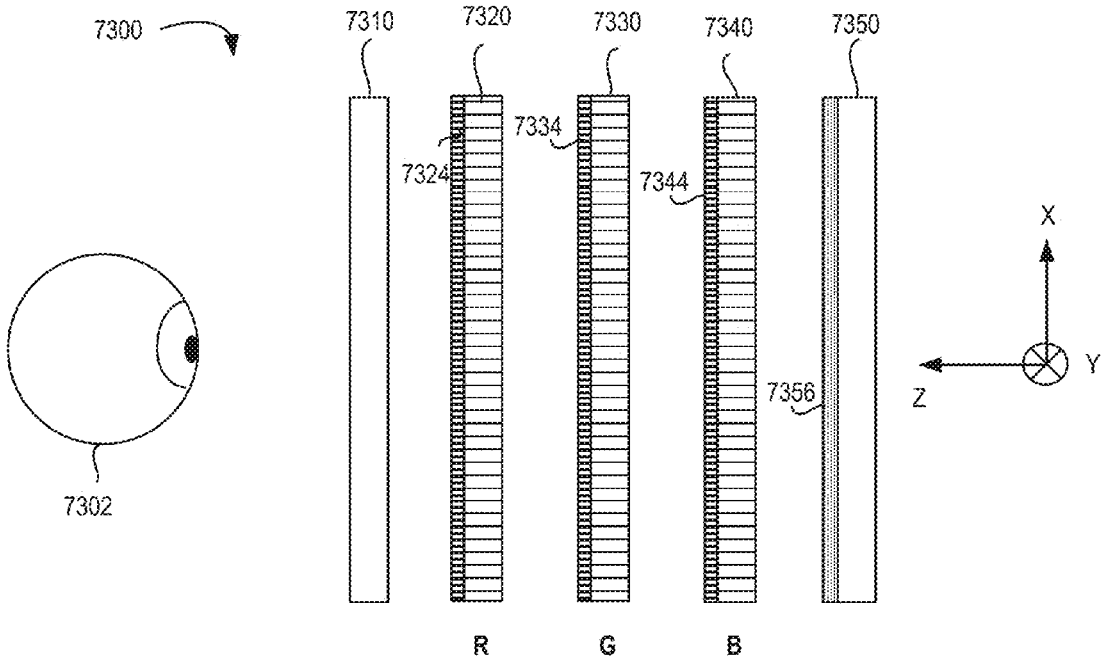
7300
7310
7320
7330
7340
7350
7324
7334
7344
7356
7302
X
Y
Z
R
G
B

FIG. 73

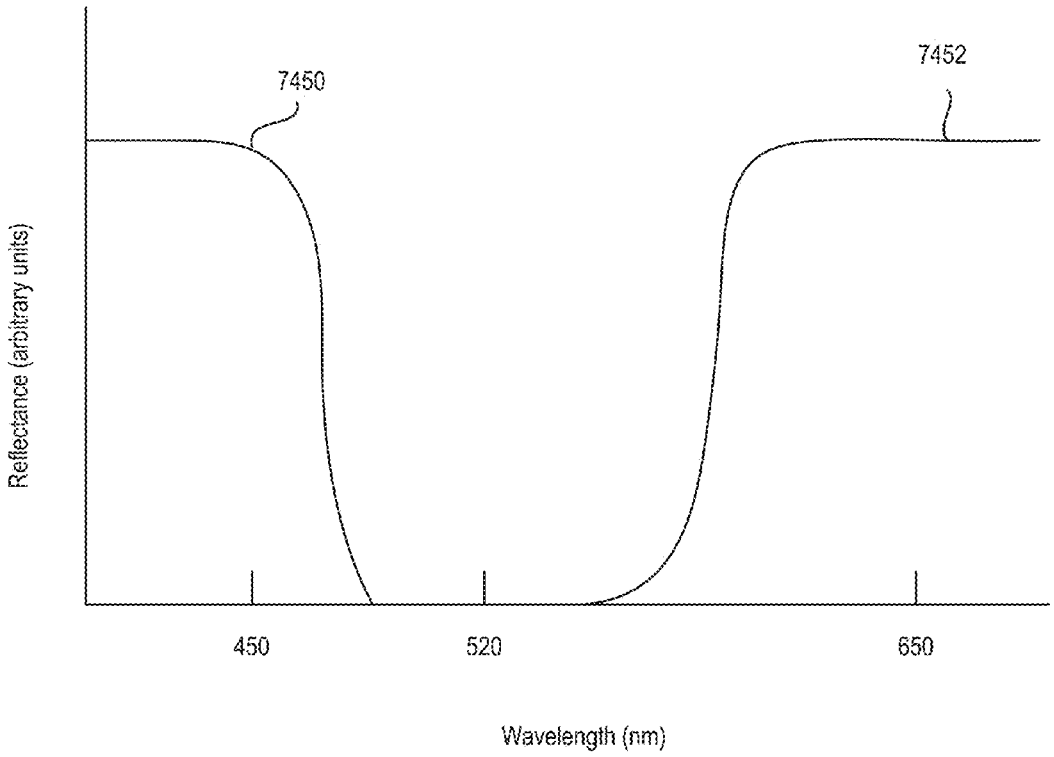
7450
7452
Reflectance (arbitrary units)
450
520
650
Wavelength (nm)

FIG. 74

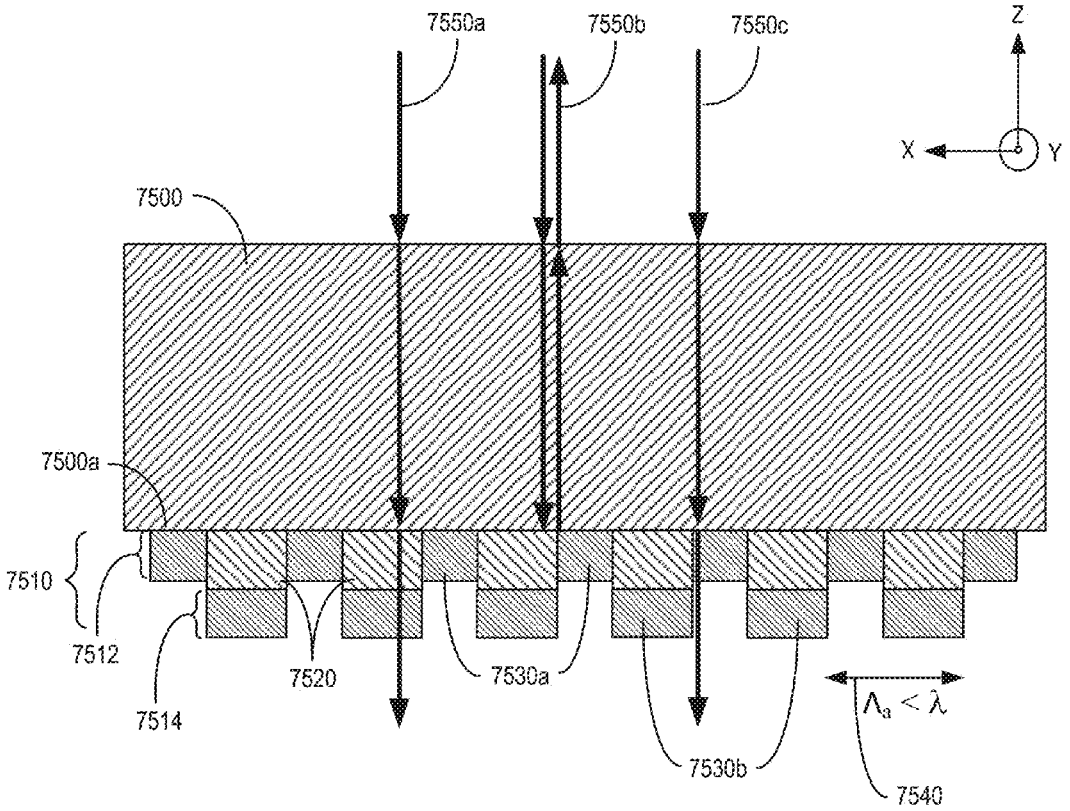
7550a
7550b
7550c
Z
X
Y
7500
7500a
7510
7512
7514
7520
7530a
7530b
$\Lambda_a < \lambda$
7540

FIG. 75

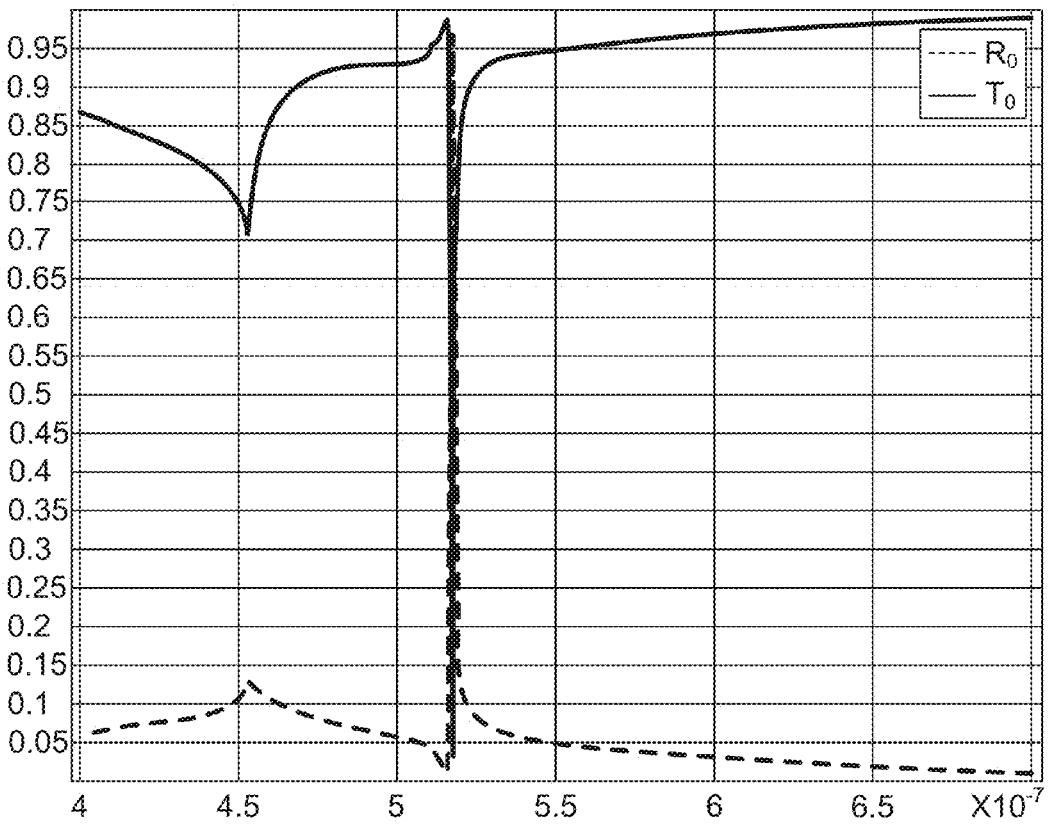
0.95
0.9
0.85
0.8
0.75
0.7
0.65
0.6
0.55
0.5
0.45
0.4
0.35
0.3
0.25
0.2
0.15
0.1
0.05
4
4.5
5
5.5
6
6.5
X10-7
R0
T0

FIG. 76

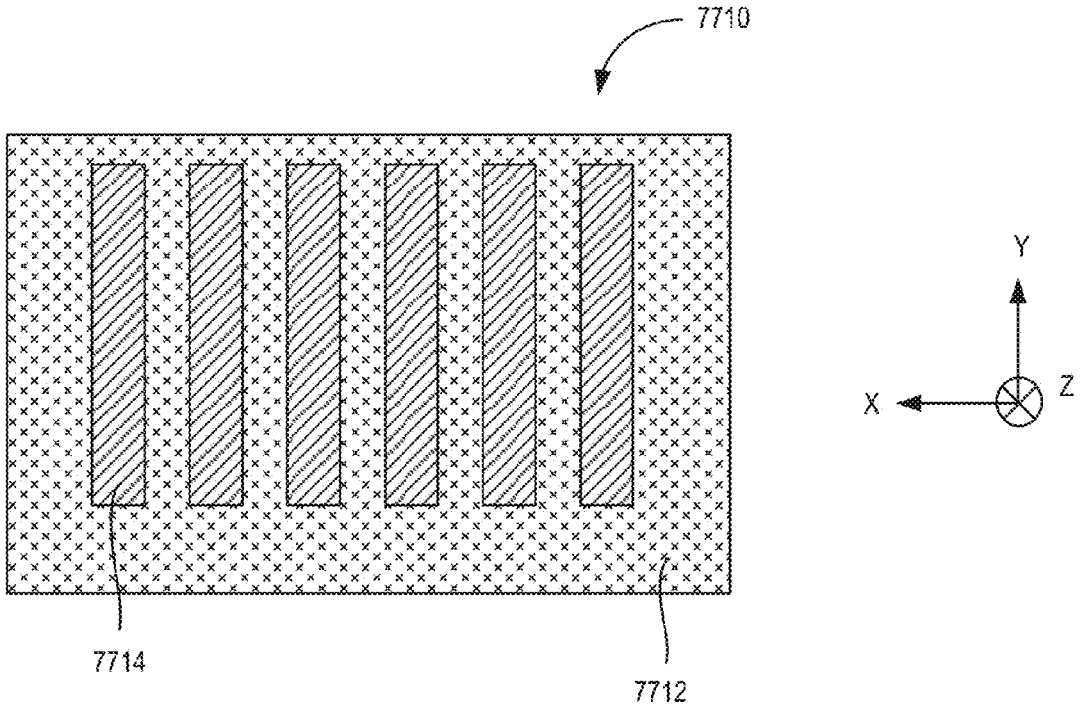

FIG. 77A

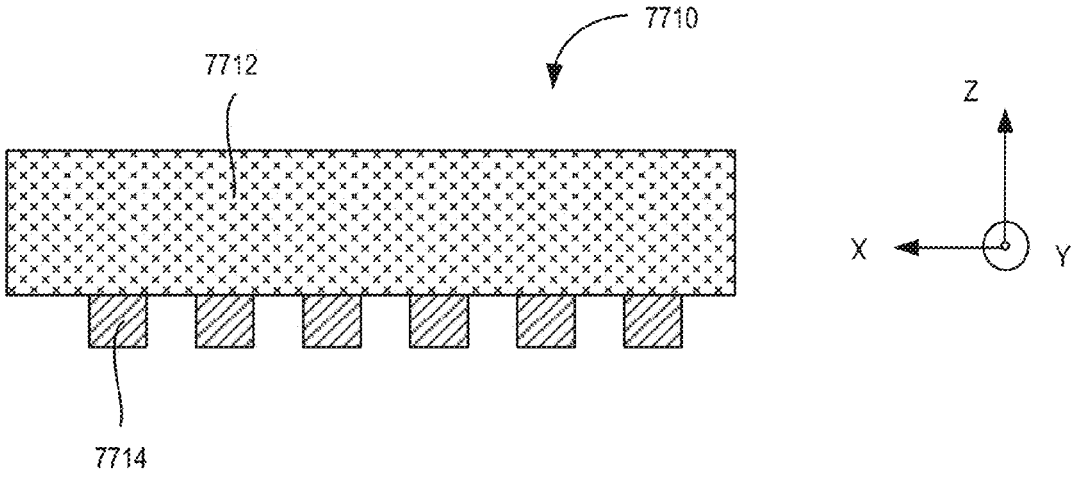

FIG. 77B

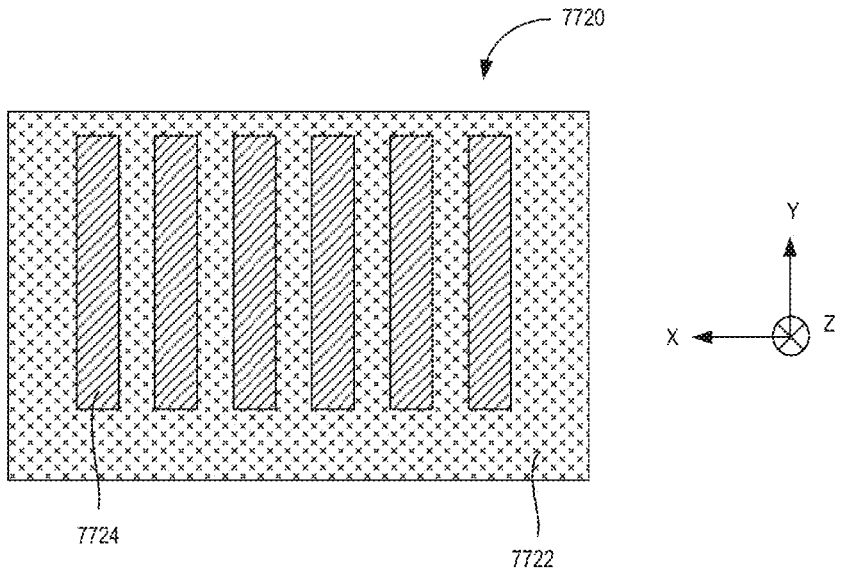

FIG. 77C

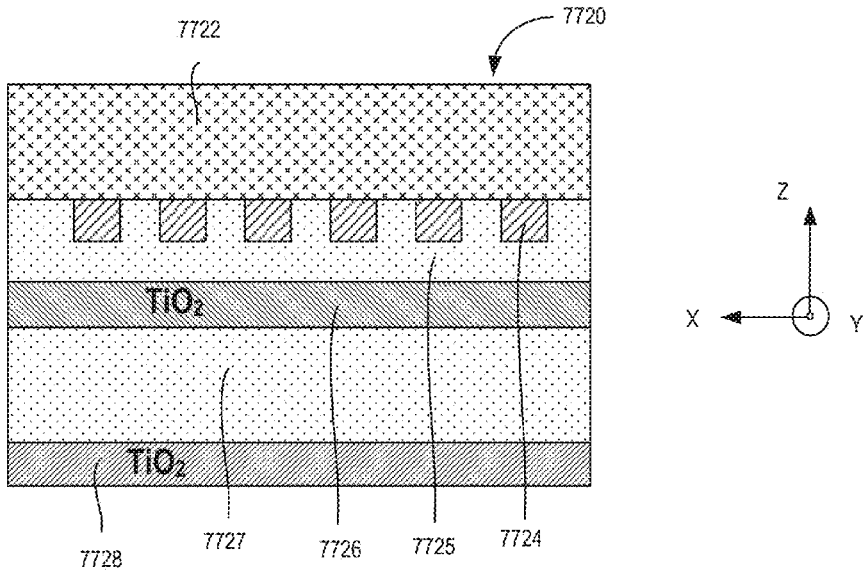

FIG. 77D

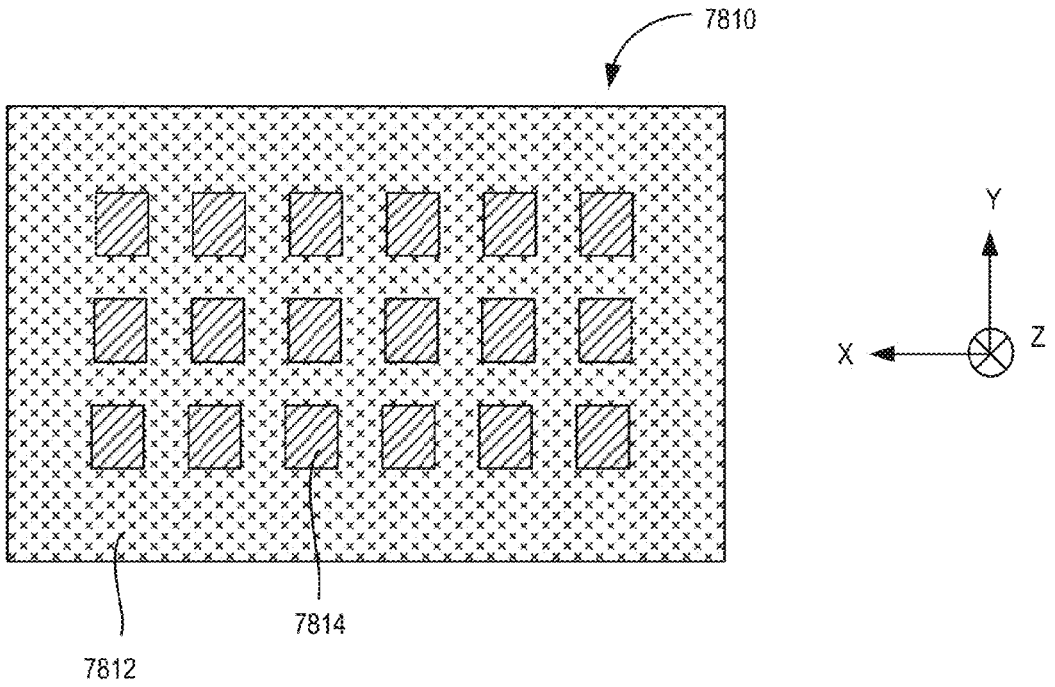

FIG. 78A

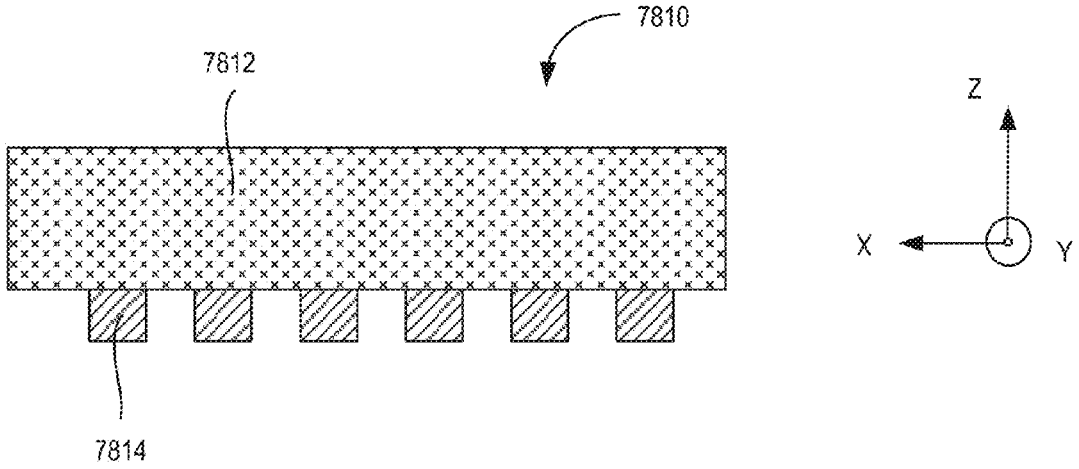

FIG. 78B

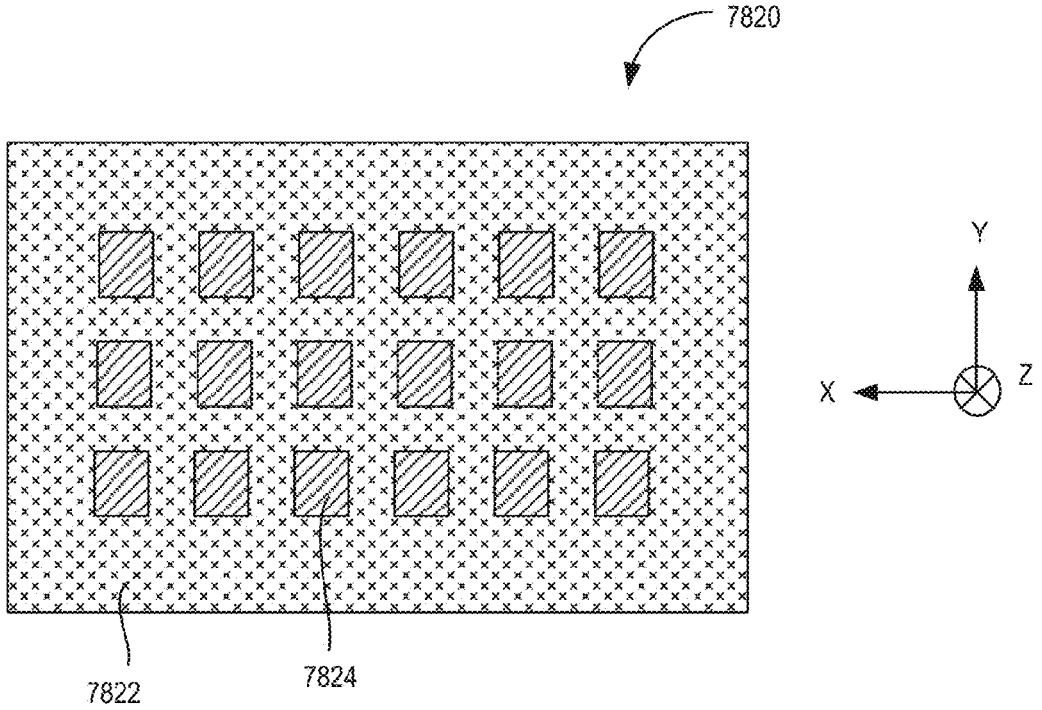

FIG. 78C

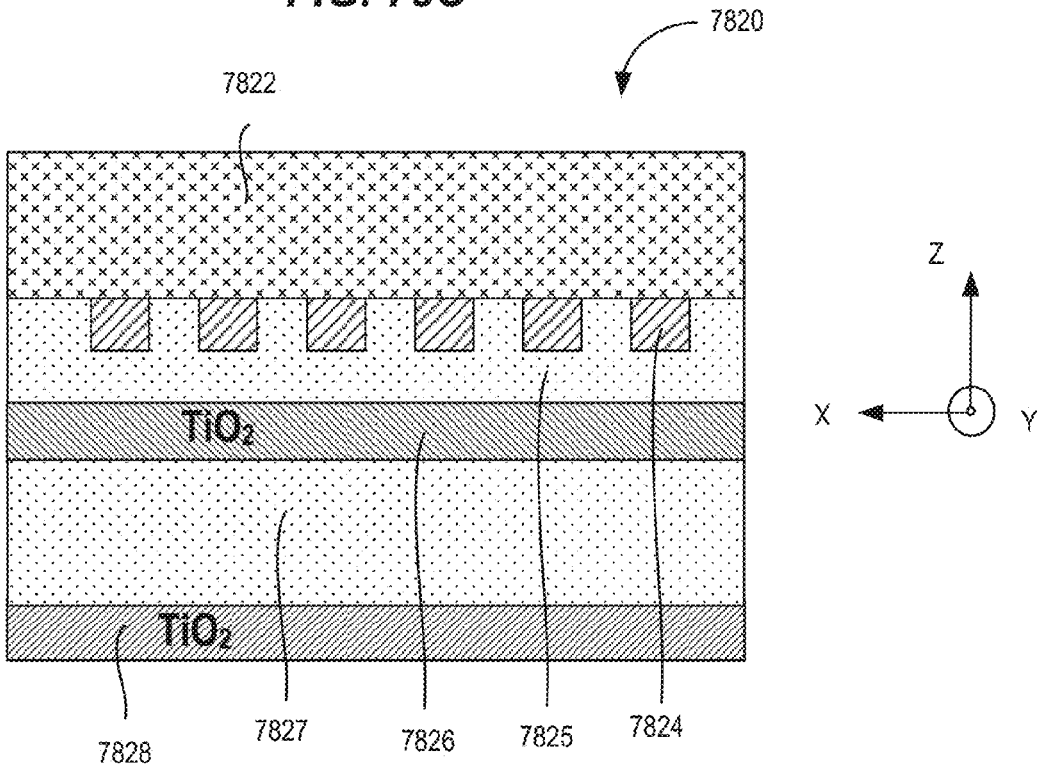

FIG. 78D

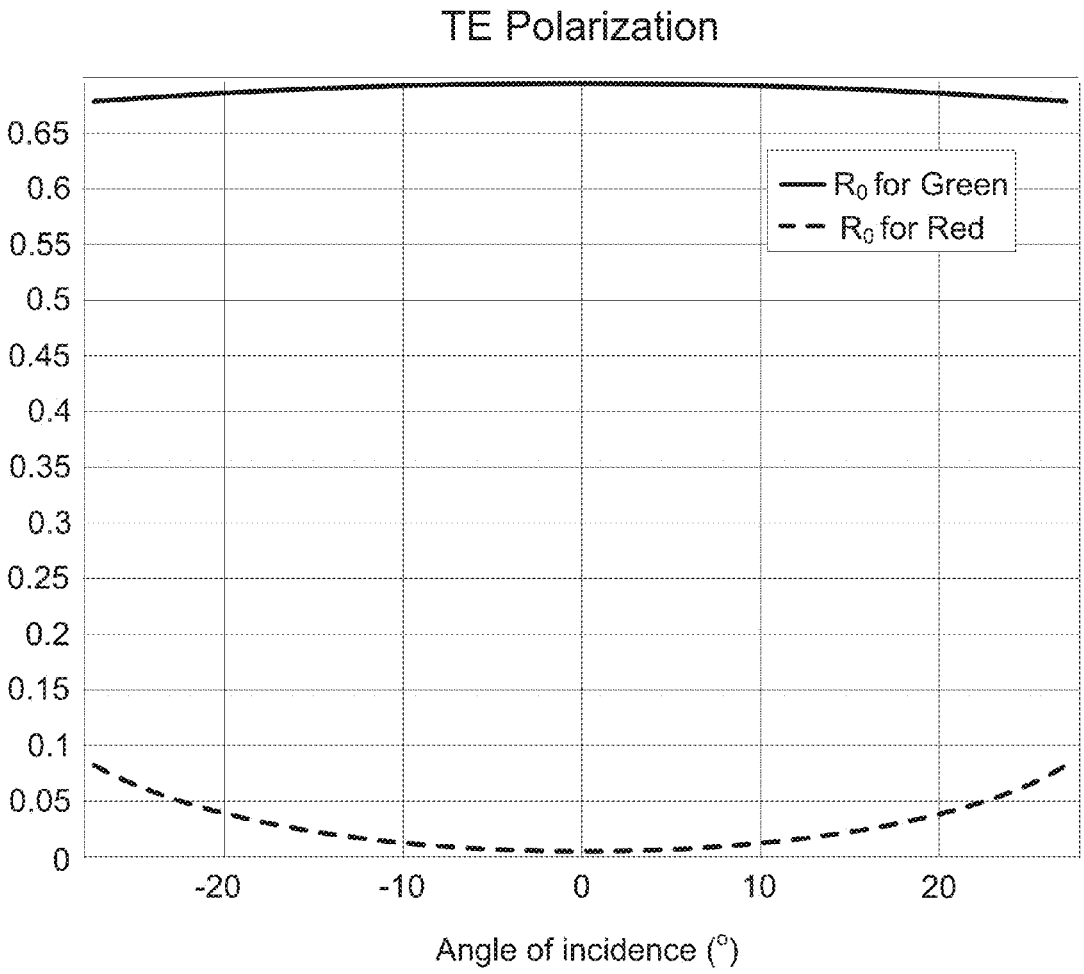
TE Polarization
0.65
0.6
0.55
0.5
0.45
0.4
0.35
0.3
0.25
0.2
0.15
0.1
0.05
0
-20
-10
0
10
20
Angle of incidence (°)
R0 for Green
R0 for Red

FIG. 79

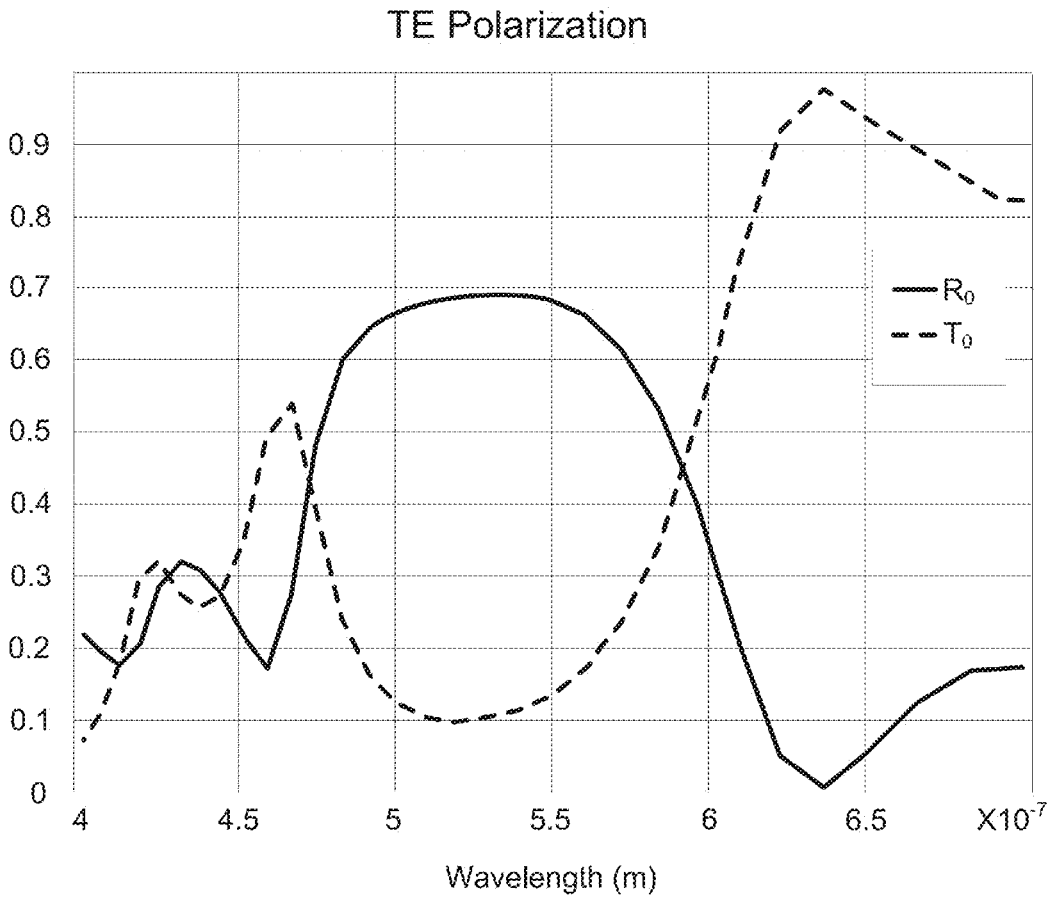
TE Polarization
0.9
0.8
0.7
0.6
0.5
0.4
0.3
0.2
0.1
0
4
4.5
5
5.5
6
6.5
X10-7
Wavelength (m)
R0
T0

FIG. 80

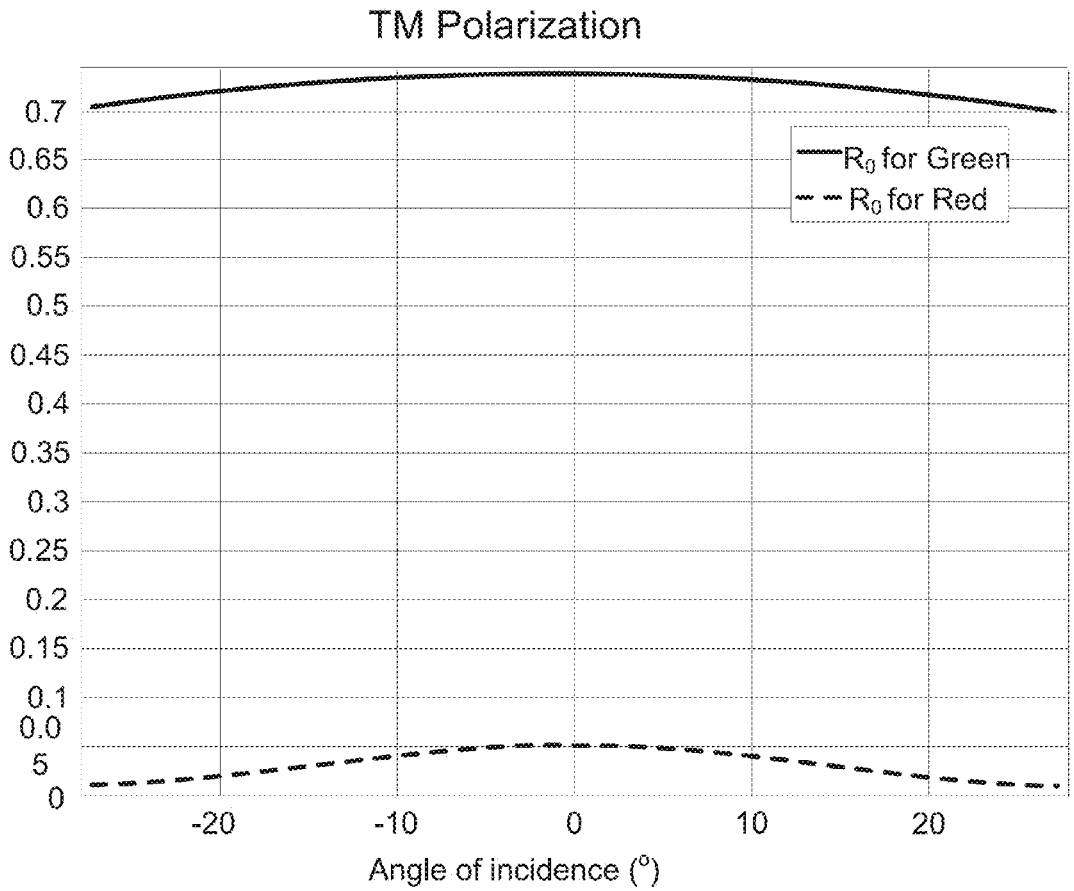
TM Polarization
0.7
0.65
0.6
0.55
0.5
0.45
0.4
0.35
0.3
0.25
0.2
0.15
0.1
0.0
5
0
-20
-10
0
10
20
Angle of incidence (°)
R0 for Green
R0 for Red

FIG. 81

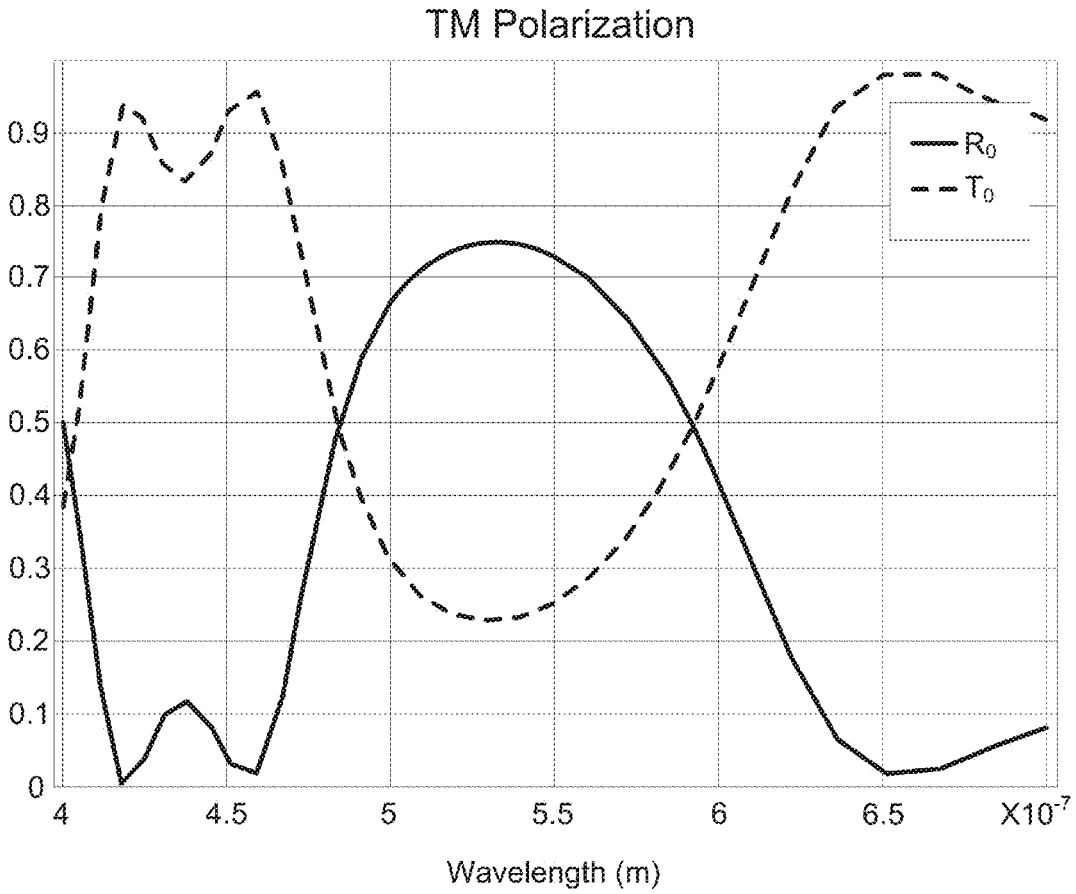
TM Polarization
0.9
0.8
0.7
0.6
0.5
0.4
0.3
0.2
0.1
0
4
4.5
5
5.5
6
6.5
X10-7
Wavelength (m)
R0
T0

FIG. 82

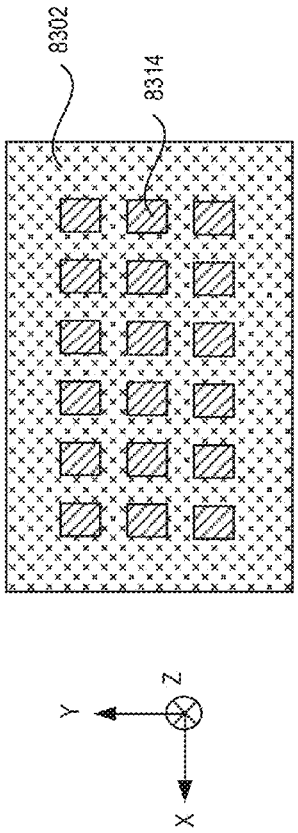

FIG. 83A

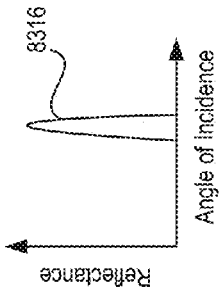

FIG. 83B

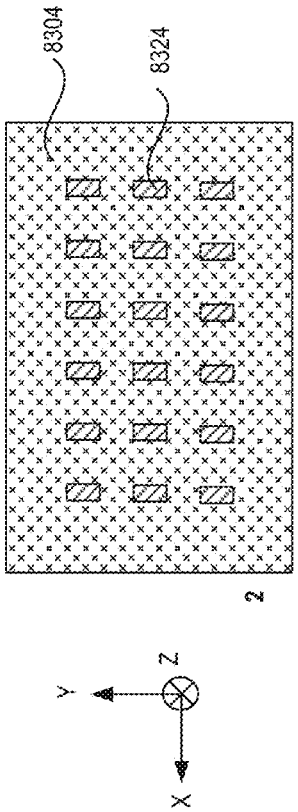

FIG. 83C

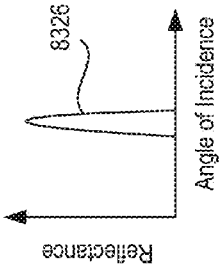

FIG. 83D

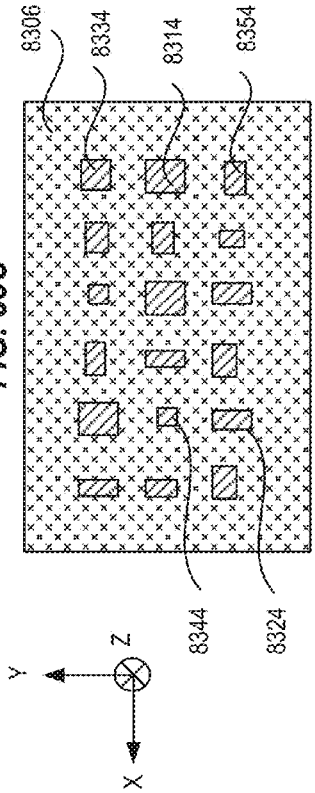

FIG. 83E

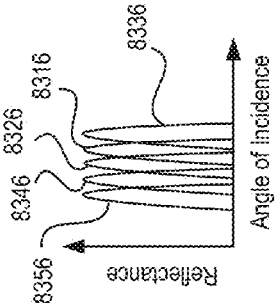

FIG. 83F

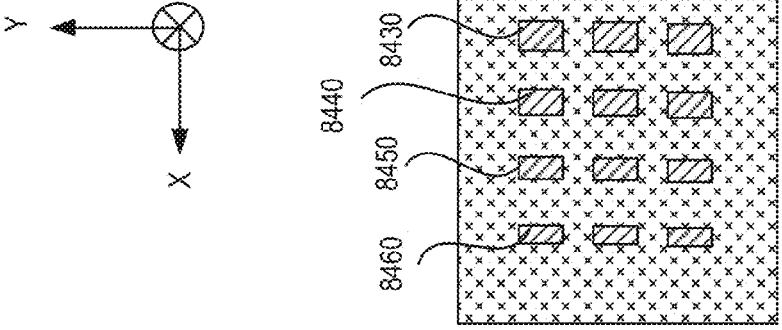

FIG. 84A

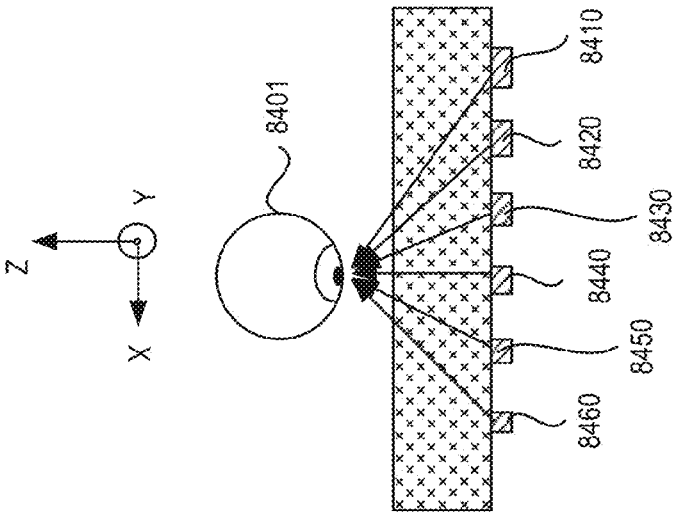

FIG. 84B

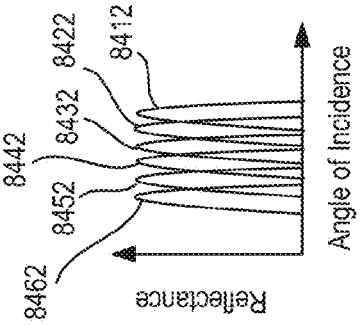

FIG. 84C

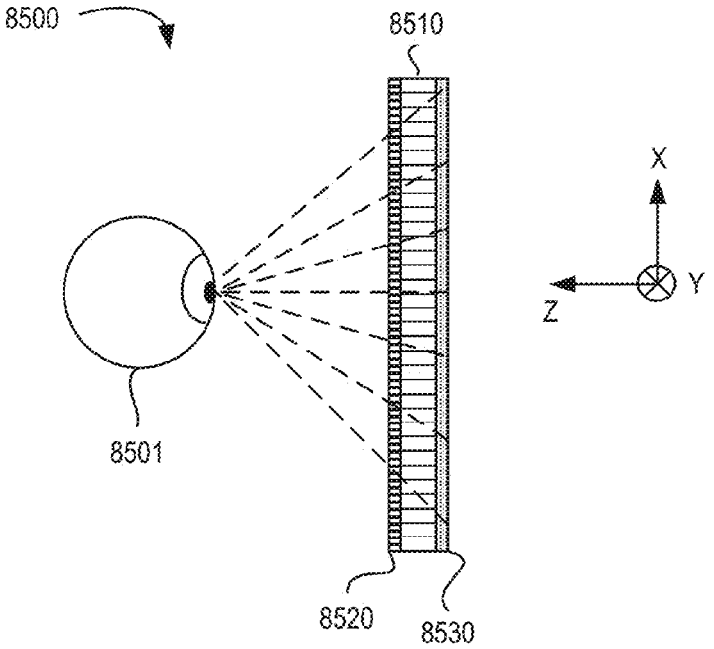

FIG. 85A

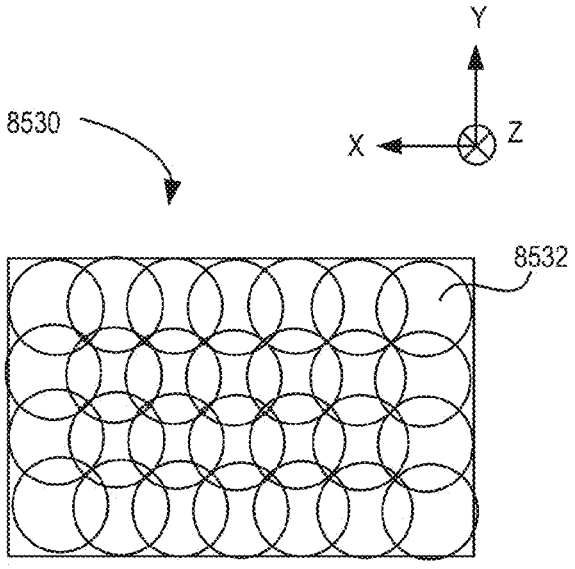

FIG. 85B

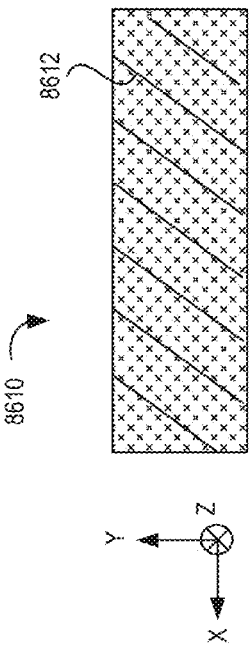

FIG. 86A

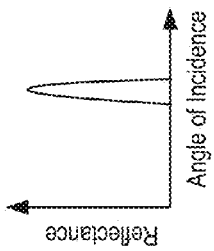

FIG. 86B

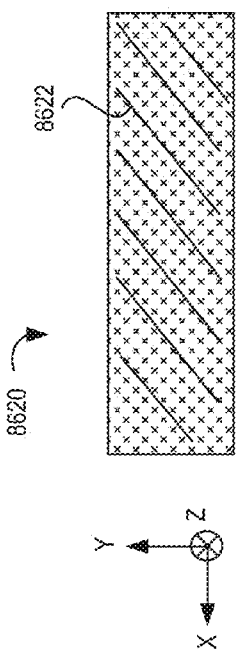

FIG. 86C

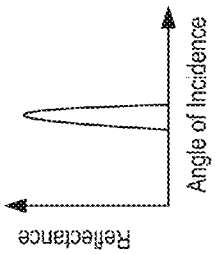

FIG. 86D

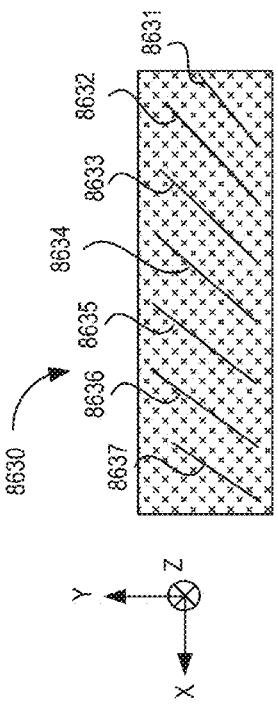

FIG. 86E

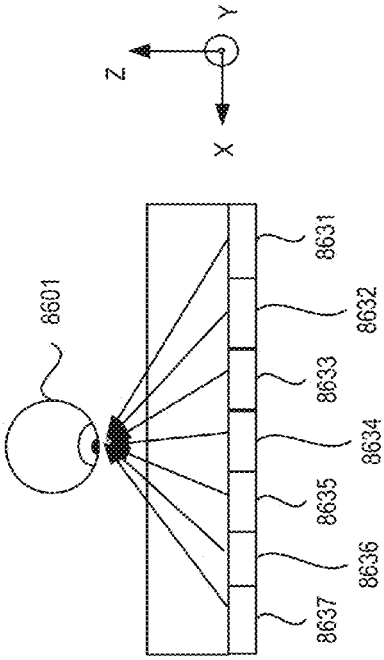

FIG. 86F

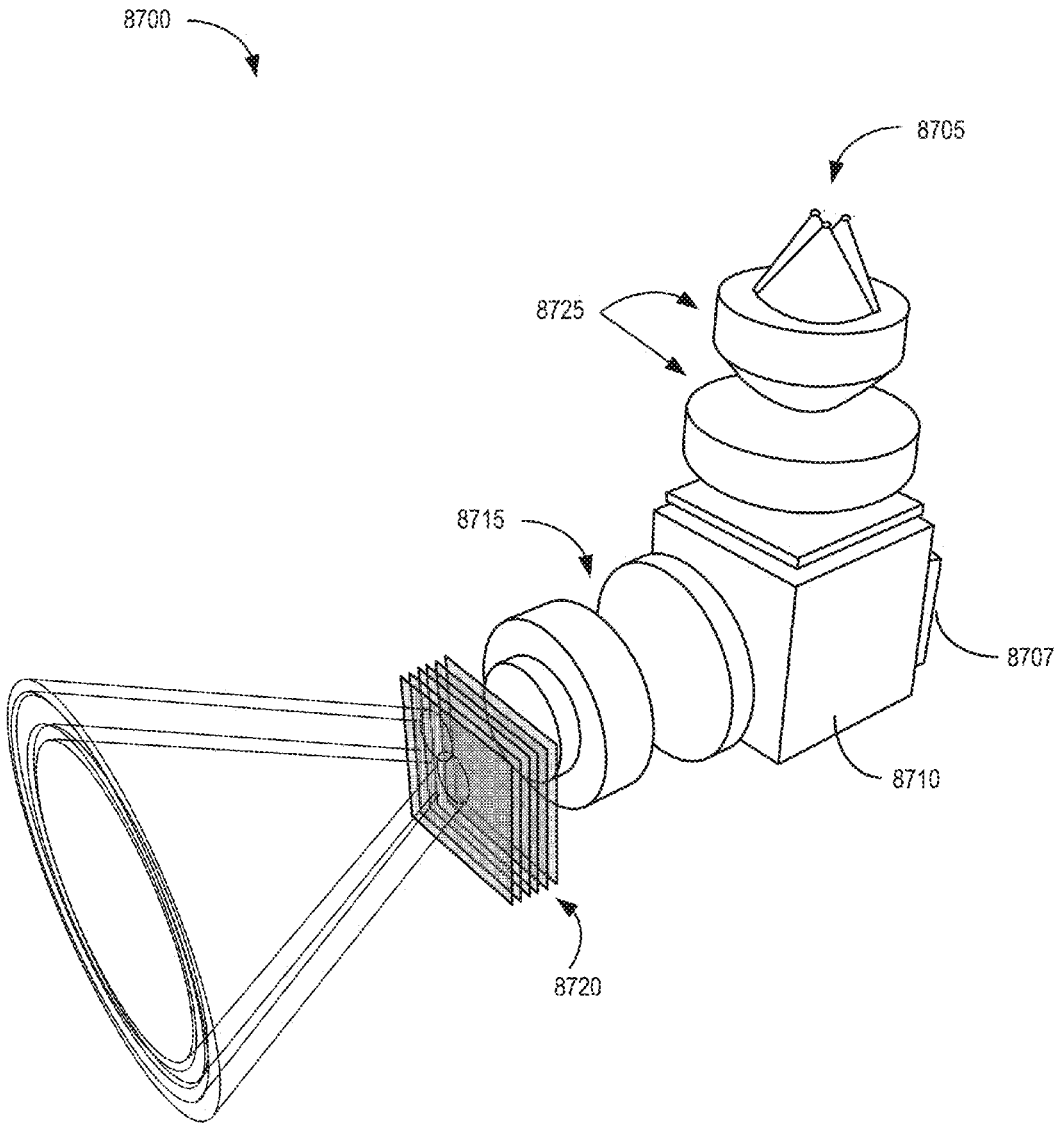

FIG. 87

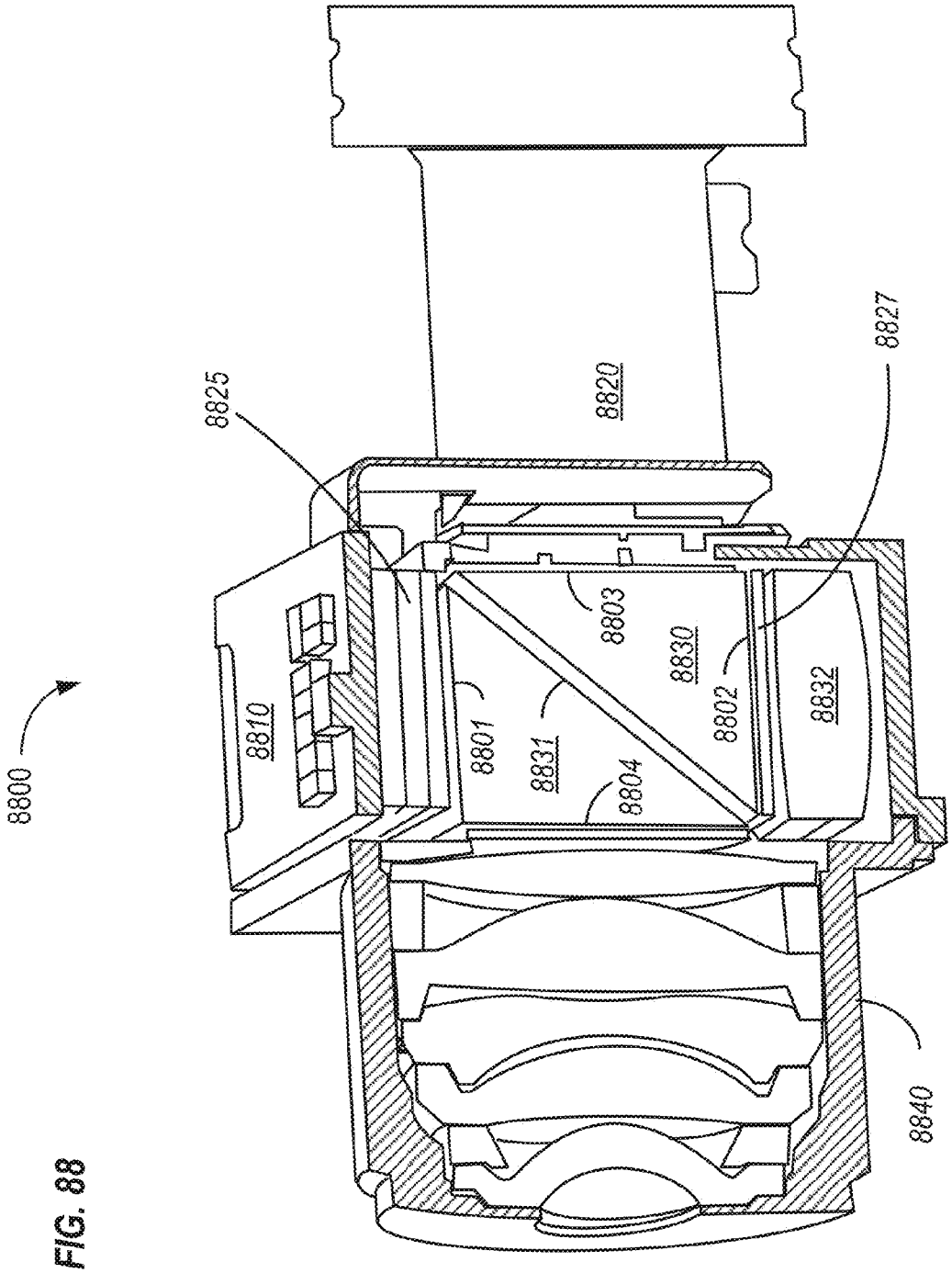
8800
8810
8825
8820
8827
8803
8830
8801
8831
8802
8832
8804
8840

FIG. 88

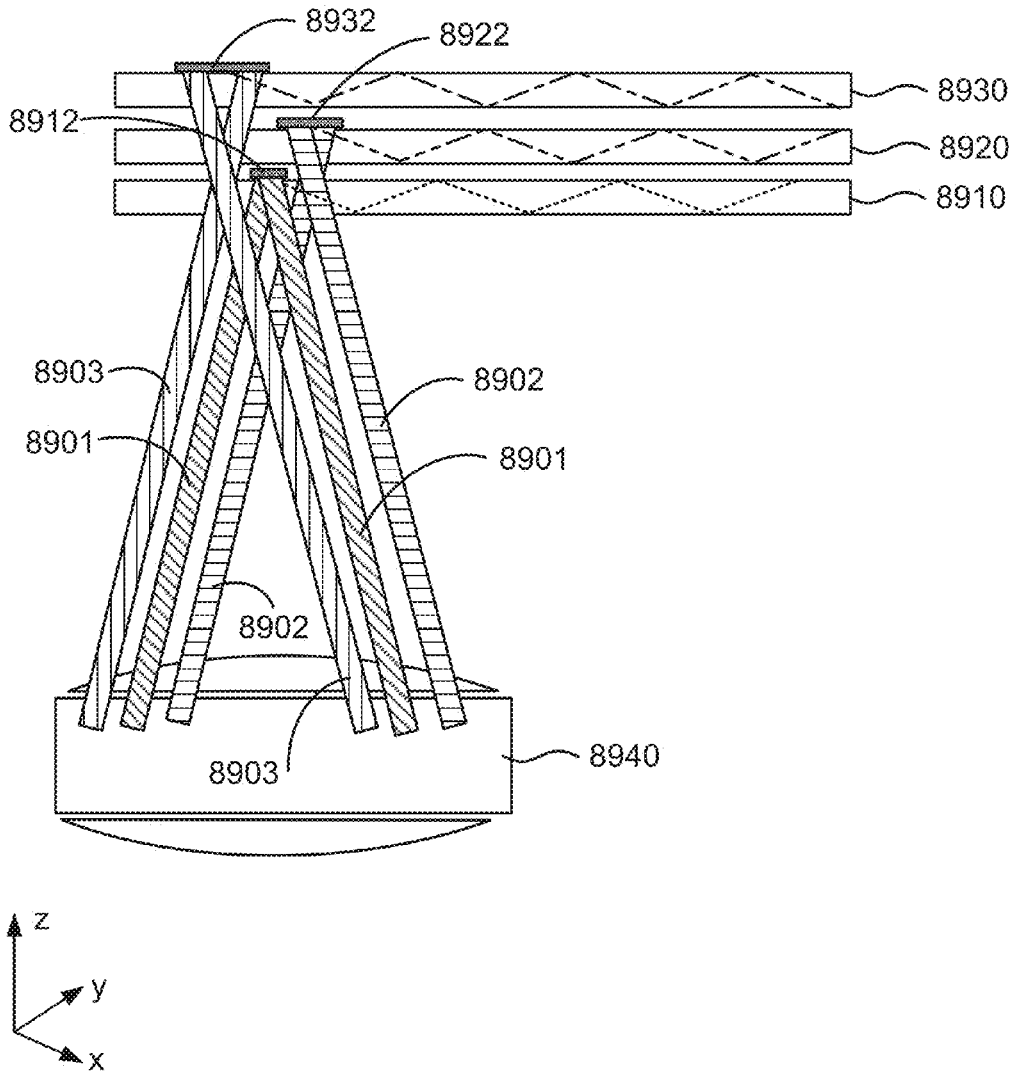
8932
8922
8930
8912
8920
8910
8903
8902
8901
8901
8902
8903
8940
z
y
x

FIG. 89

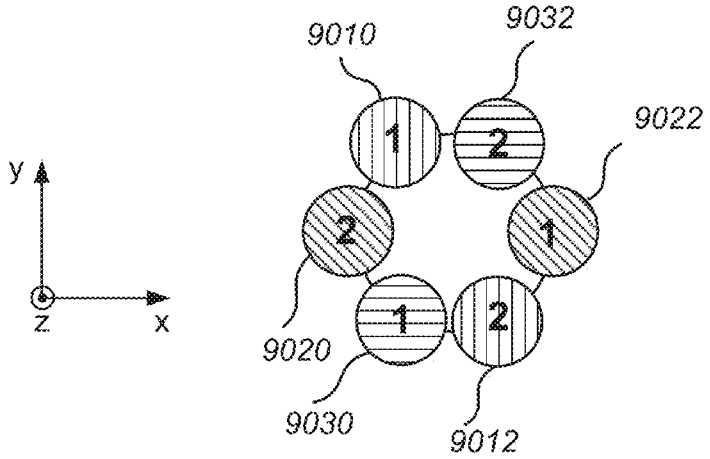

FIG. 90A

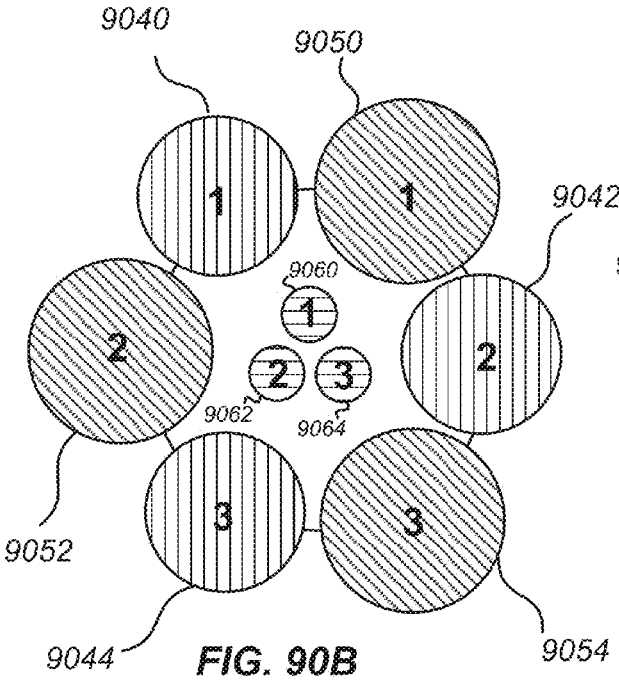

FIG. 90B

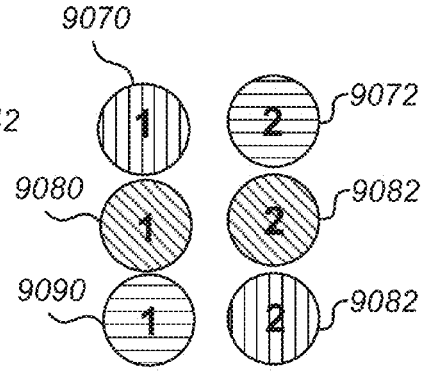

FIG. 90C

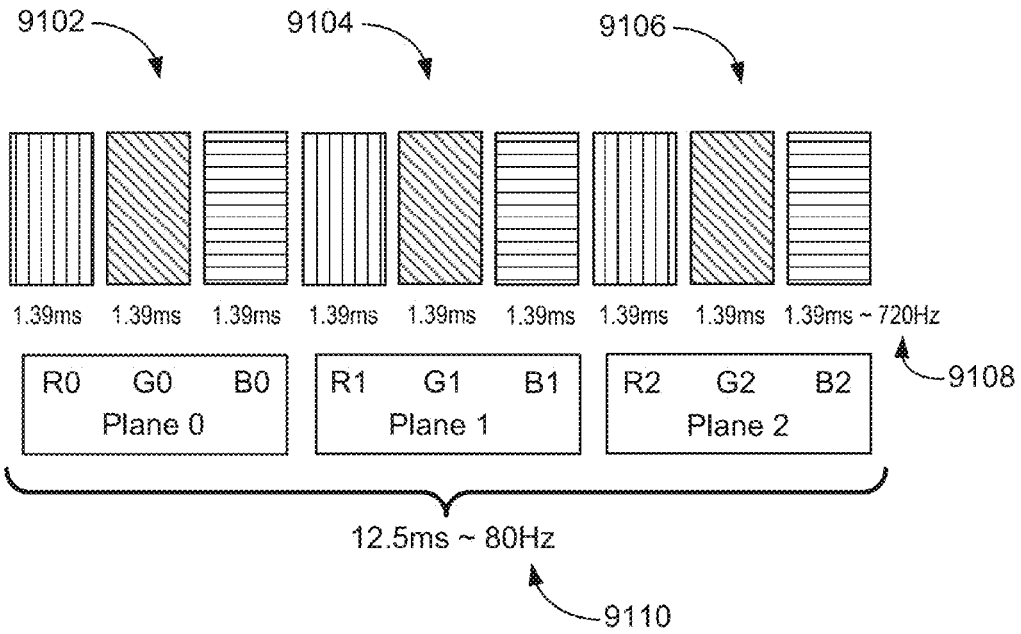
9102
9104
9106
1.39ms
1.39ms
1.39ms
1.39ms
1.39ms
1.39ms
1.39ms
1.39ms
1.39ms ~ 720Hz
9108
R0 G0 B0
Plane 0
R1 G1 B1
Plane 1
R2 G2 B2
Plane 2
12.5ms ~ 80Hz
9110

FIG. 91

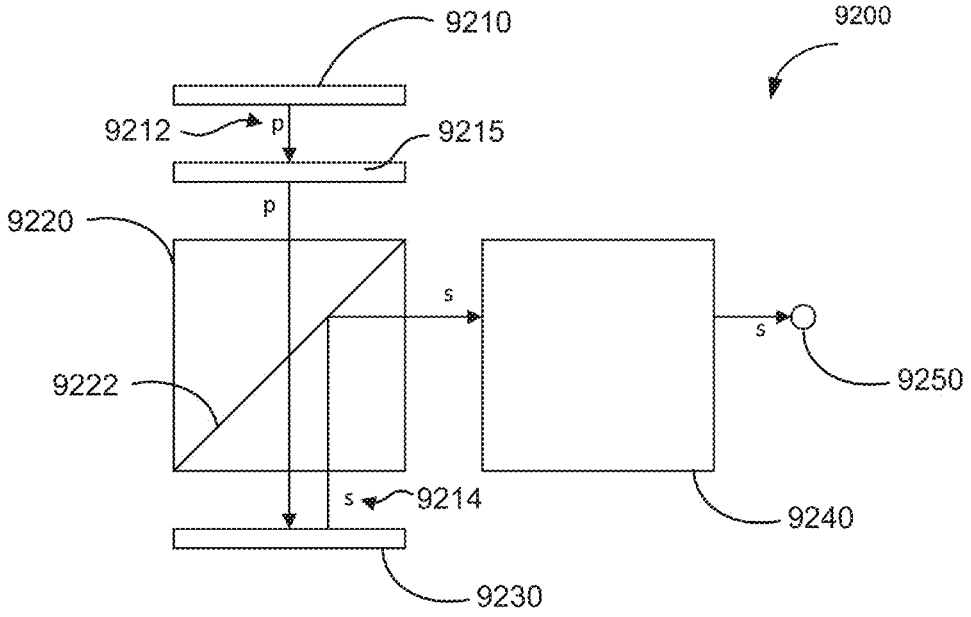

FIG. 92A

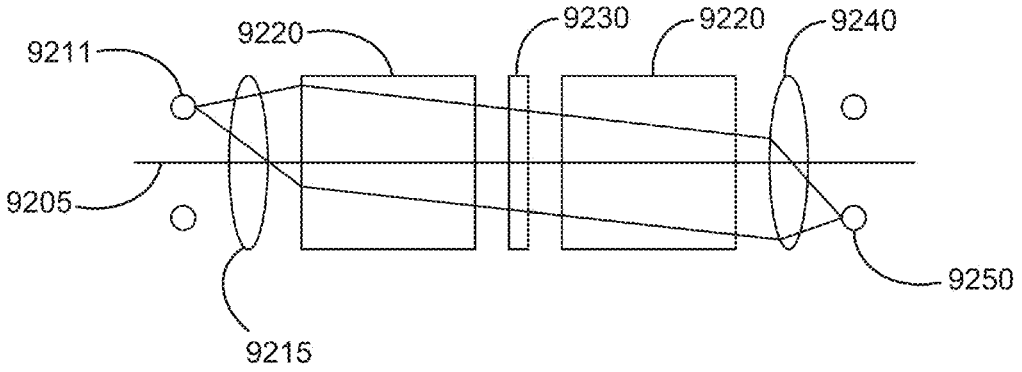

FIG. 92B

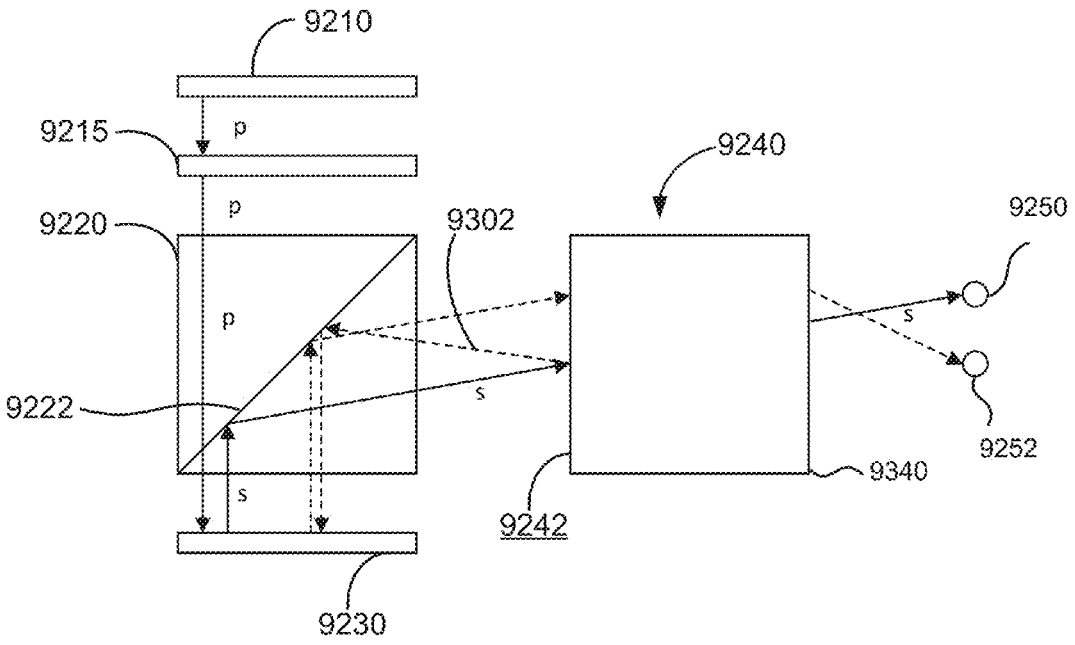
9210
9215
p
9220
p
p
9302
9240
9250
s
9222
s
s
9252
9340
9242
9230

FIG. 93A

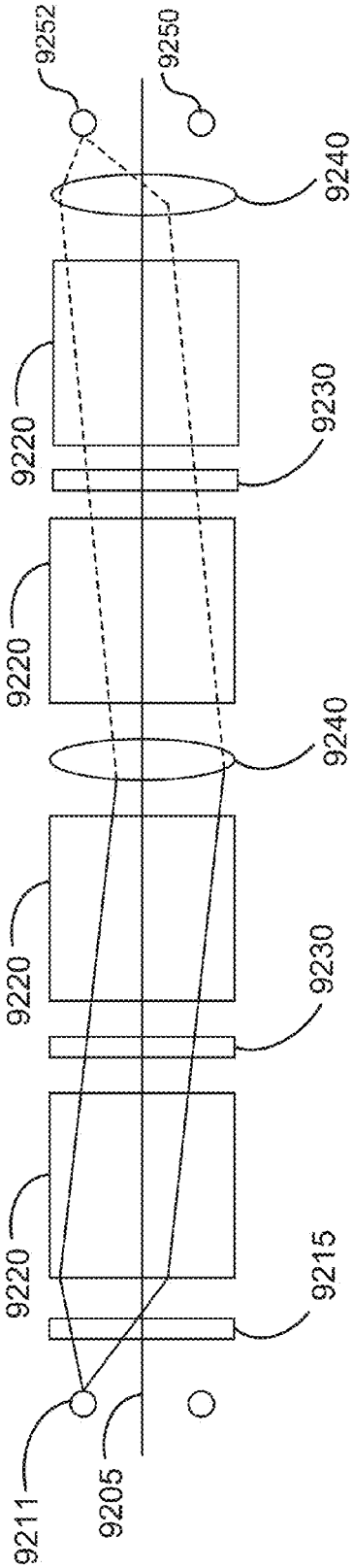
9252
9250
9240
9220
9230
9220
9240
9220
9230
9220
9215
9211
9205

FIG. 93B

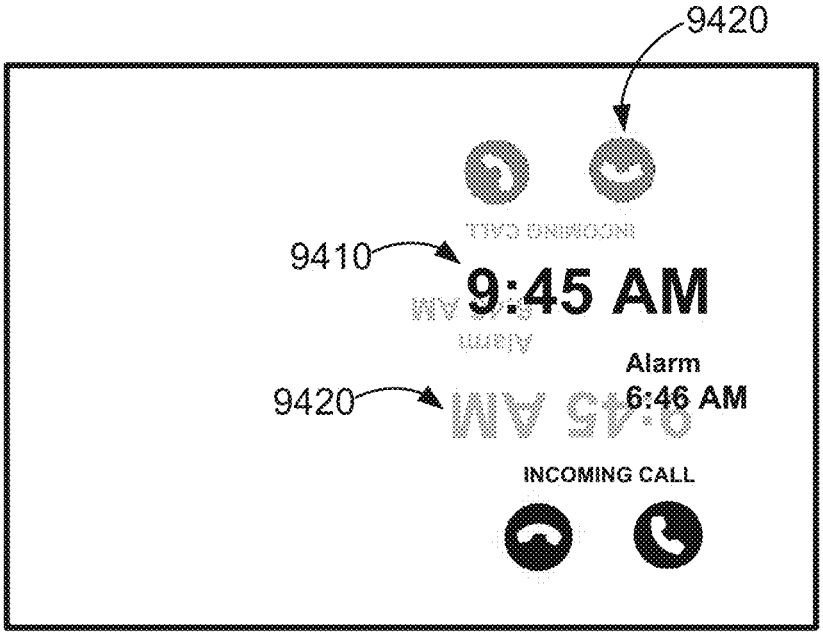

FIG. 94

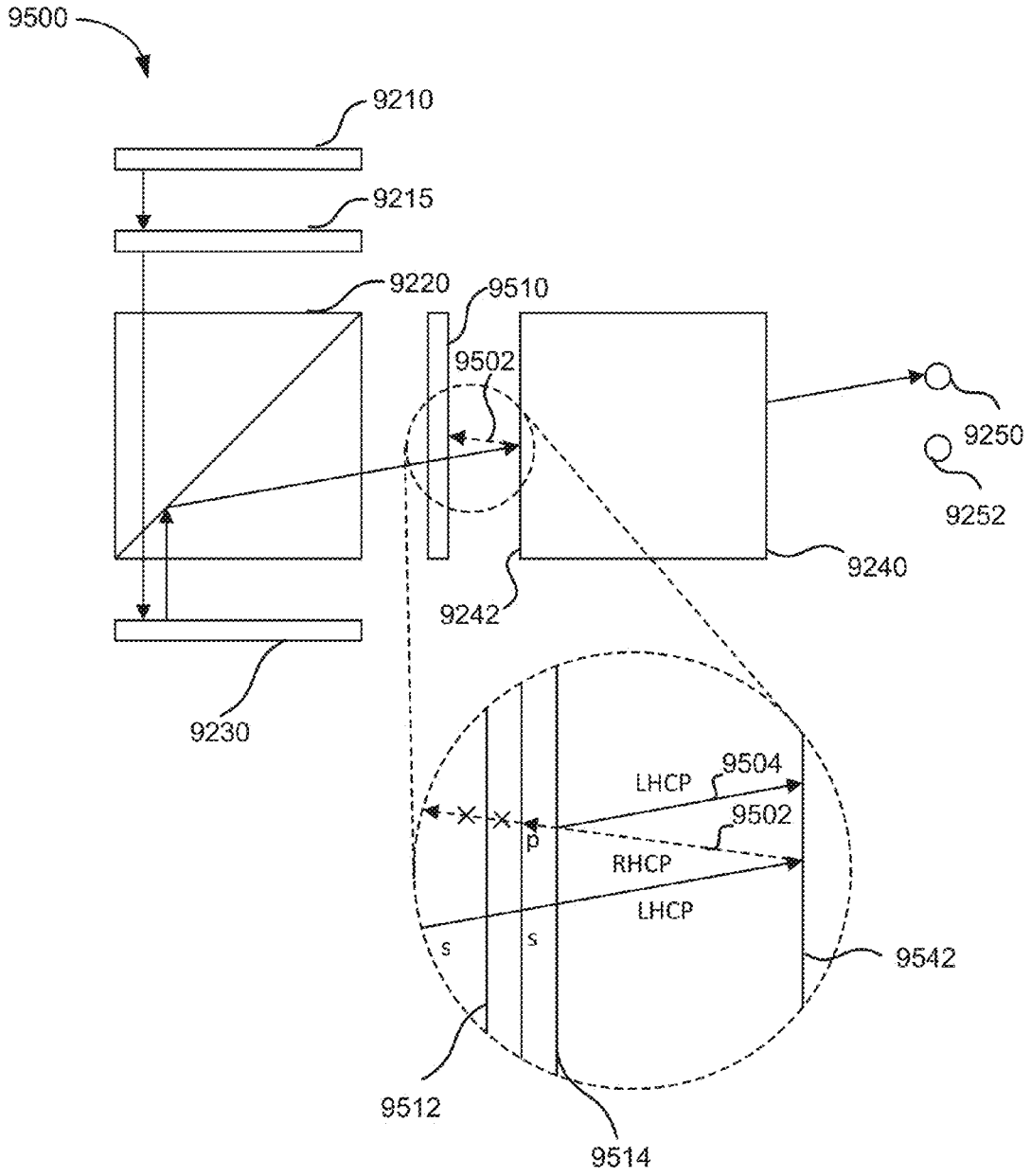
9500
9210
9215
9220
9510
9502
9250
9252
9240
9242
9230
LHCP
9504
9502
p
RHCP
LHCP
s
s
9542
9512
9514

FIG. 95A

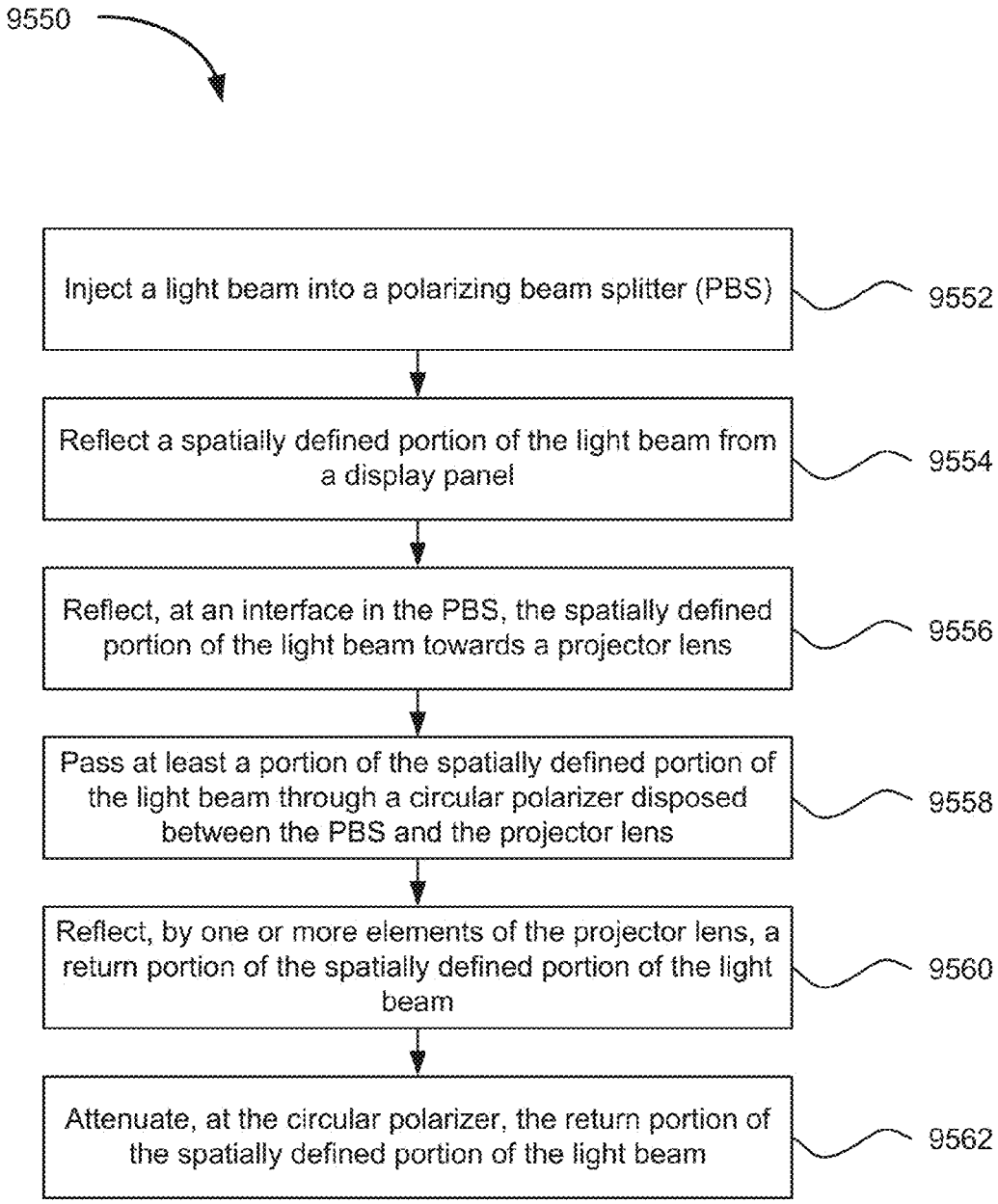
9550
Inject a light beam into a polarizing beam splitter (PBS)
9552
Reflect a spatially defined portion of the light beam from a display panel
9554
Reflect, at an interface in the PBS, the spatially defined portion of the light beam towards a projector lens
9556
Pass at least a portion of the spatially defined portion of the light beam through a circular polarizer disposed between the PBS and the projector lens
9558
Reflect, by one or more elements of the projector lens, a return portion of the spatially defined portion of the light beam
9560
Attenuate, at the circular polarizer, the return portion of the spatially defined portion of the light beam
9562

FIG. 95B

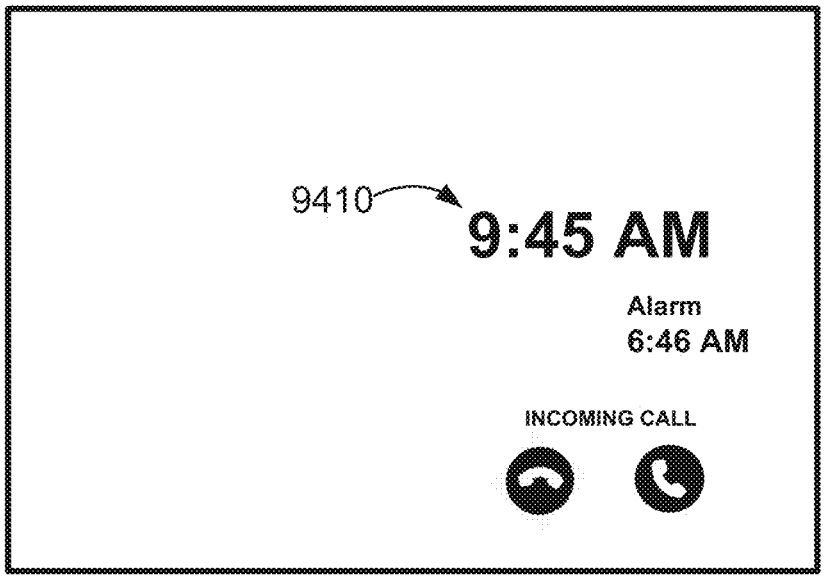

FIG. 96

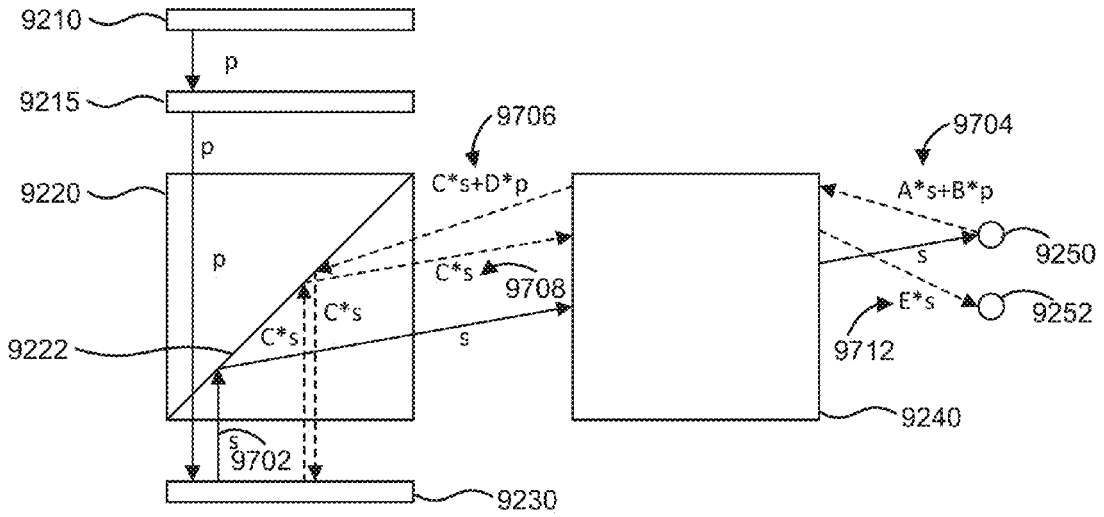
9210
p
9215
p
9220
p
9222
C*s
C*s
s
s
9702
9230
9706
C*s+D*p
C*s
9708
9704
A*s+B*p
s
9250
E*s
9252
9712
9240

FIG. 97A

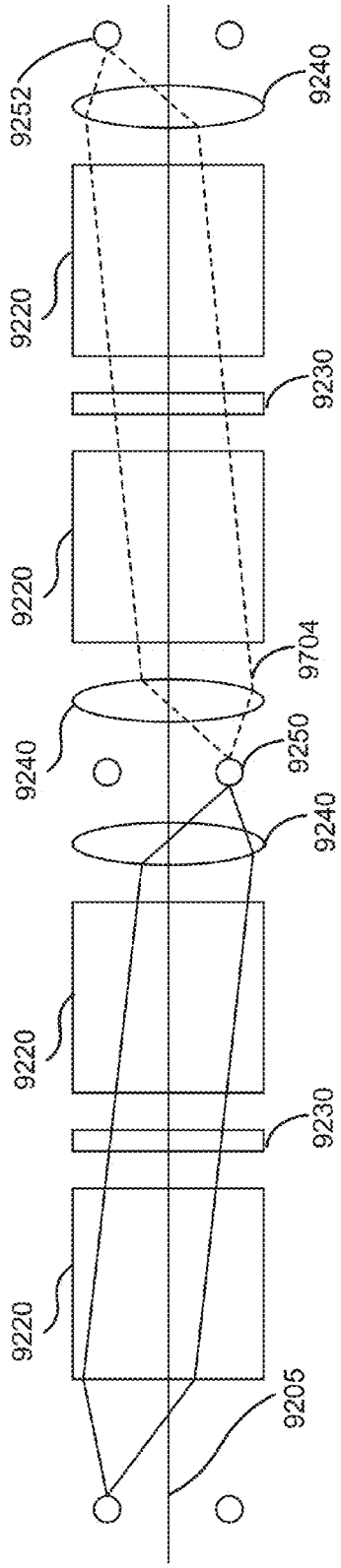
9252
9240
9220
9230
9220
9704
9240
9250
9240
9220
9230
9220
9205

FIG. 97B

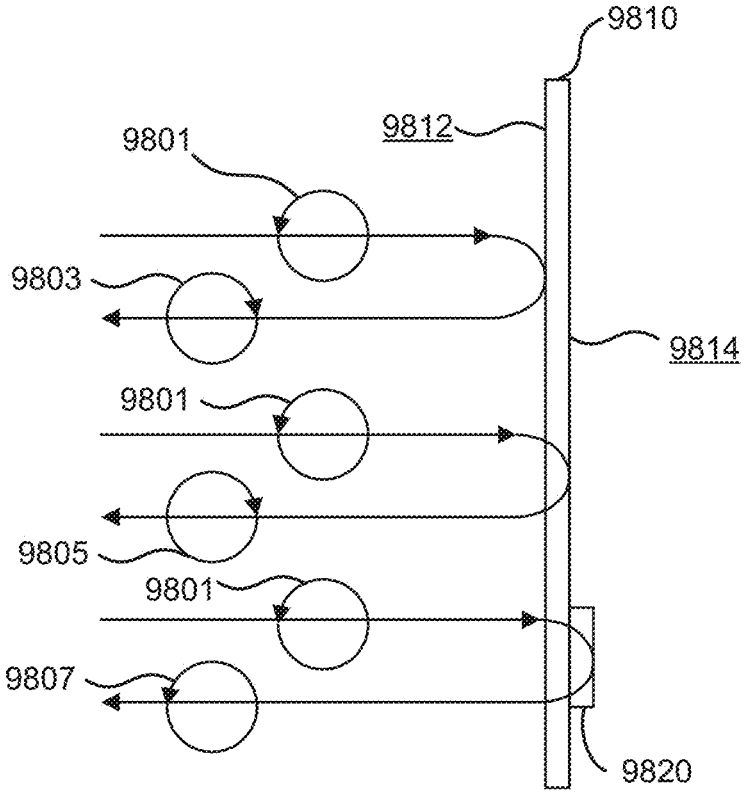

FIG. 98

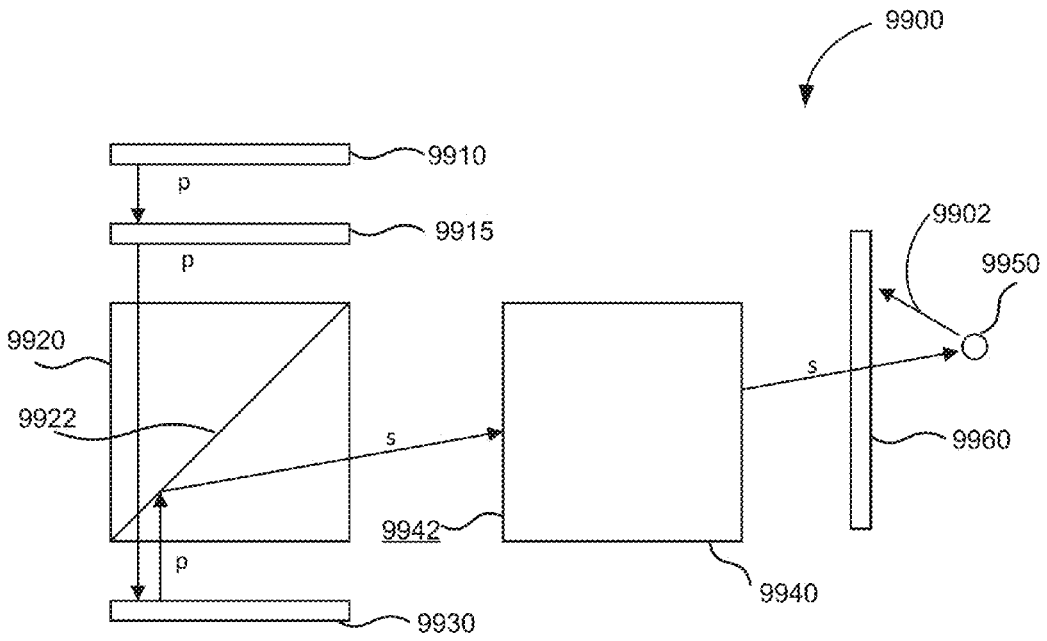

FIG. 99A

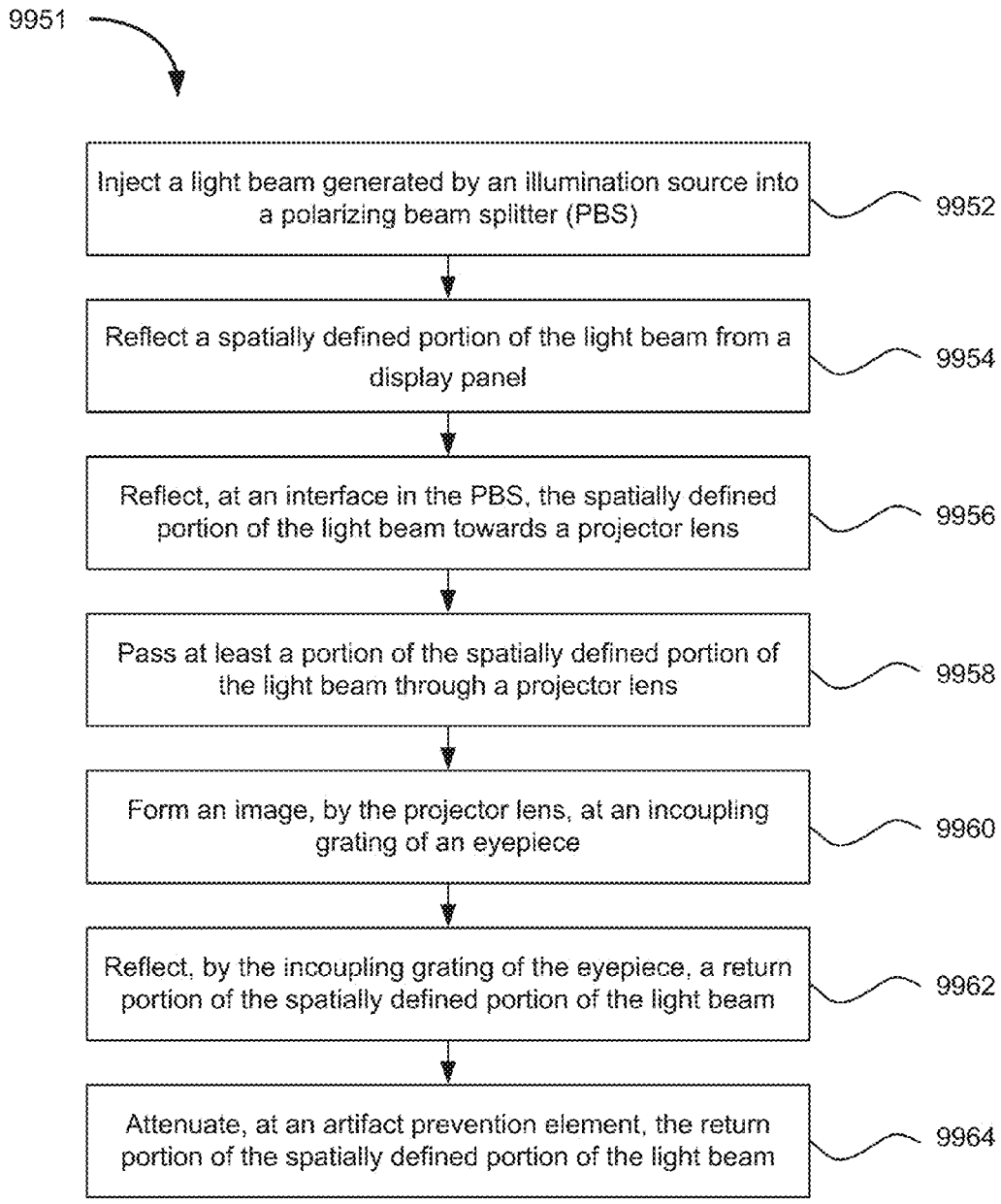
9951
Inject a light beam generated by an illumination source into a polarizing beam splitter (PBS)
9952
Reflect a spatially defined portion of the light beam from a display panel
9954
Reflect, at an interface in the PBS, the spatially defined portion of the light beam towards a projector lens
9956
Pass at least a portion of the spatially defined portion of the light beam through a projector lens
9958
Form an image, by the projector lens, at an incoupling grating of an eyepiece
9960
Reflect, by the incoupling grating of the eyepiece, a return portion of the spatially defined portion of the light beam
9962
Attenuate, at an artifact prevention element, the return portion of the spatially defined portion of the light beam
9964

FIG. 99B

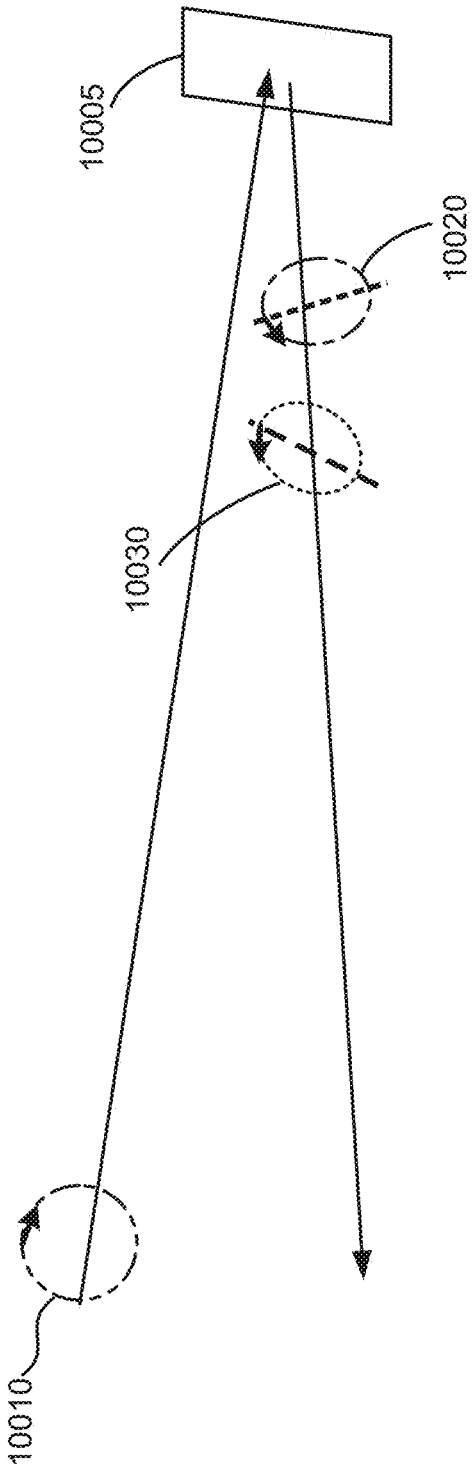

FIG. 100

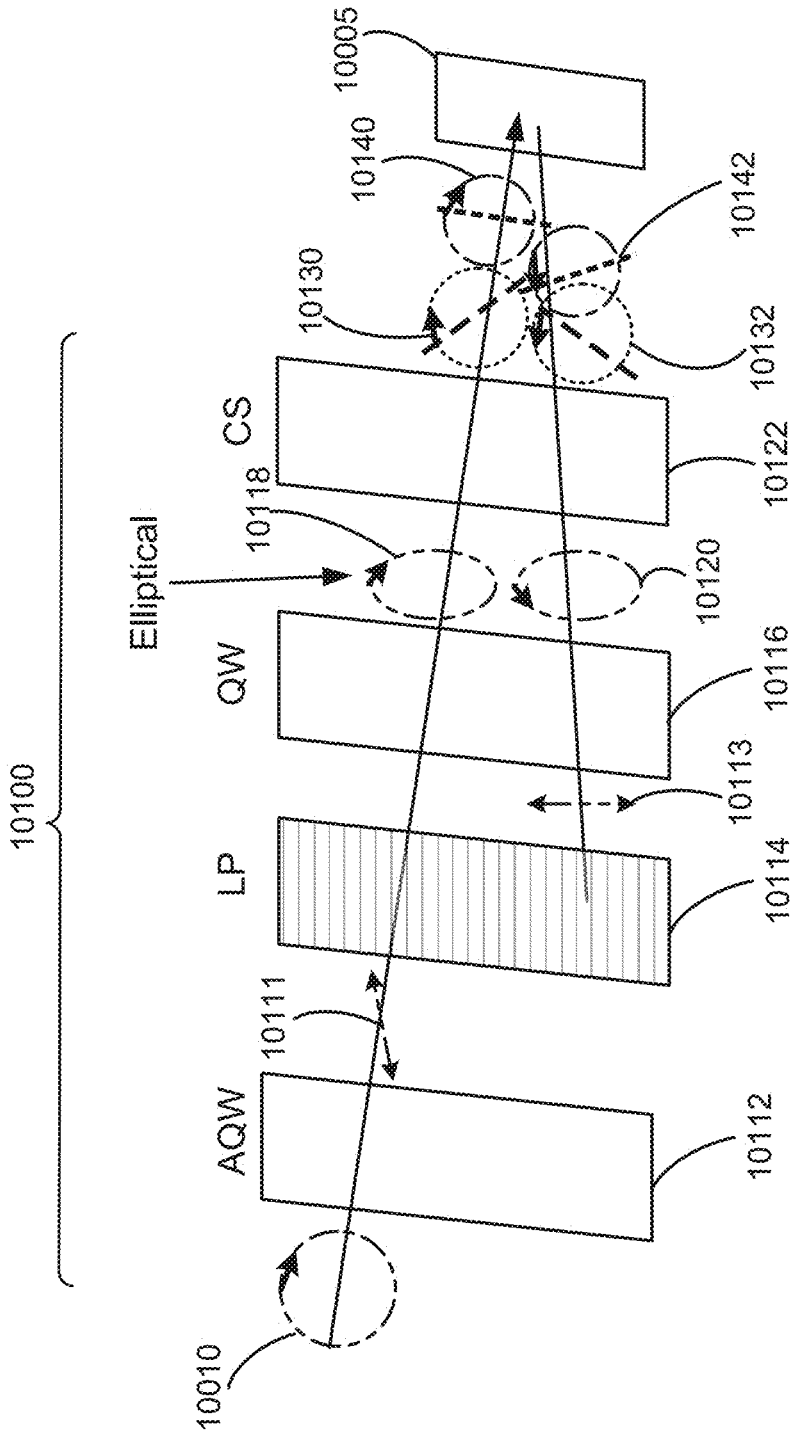
10100
Elliptical
10005
10140
10142
10130
10132
CS
10122
10118
10120
QW
10116
10113
LP
10114
10111
AQW
10112
10010

FIG. 101A

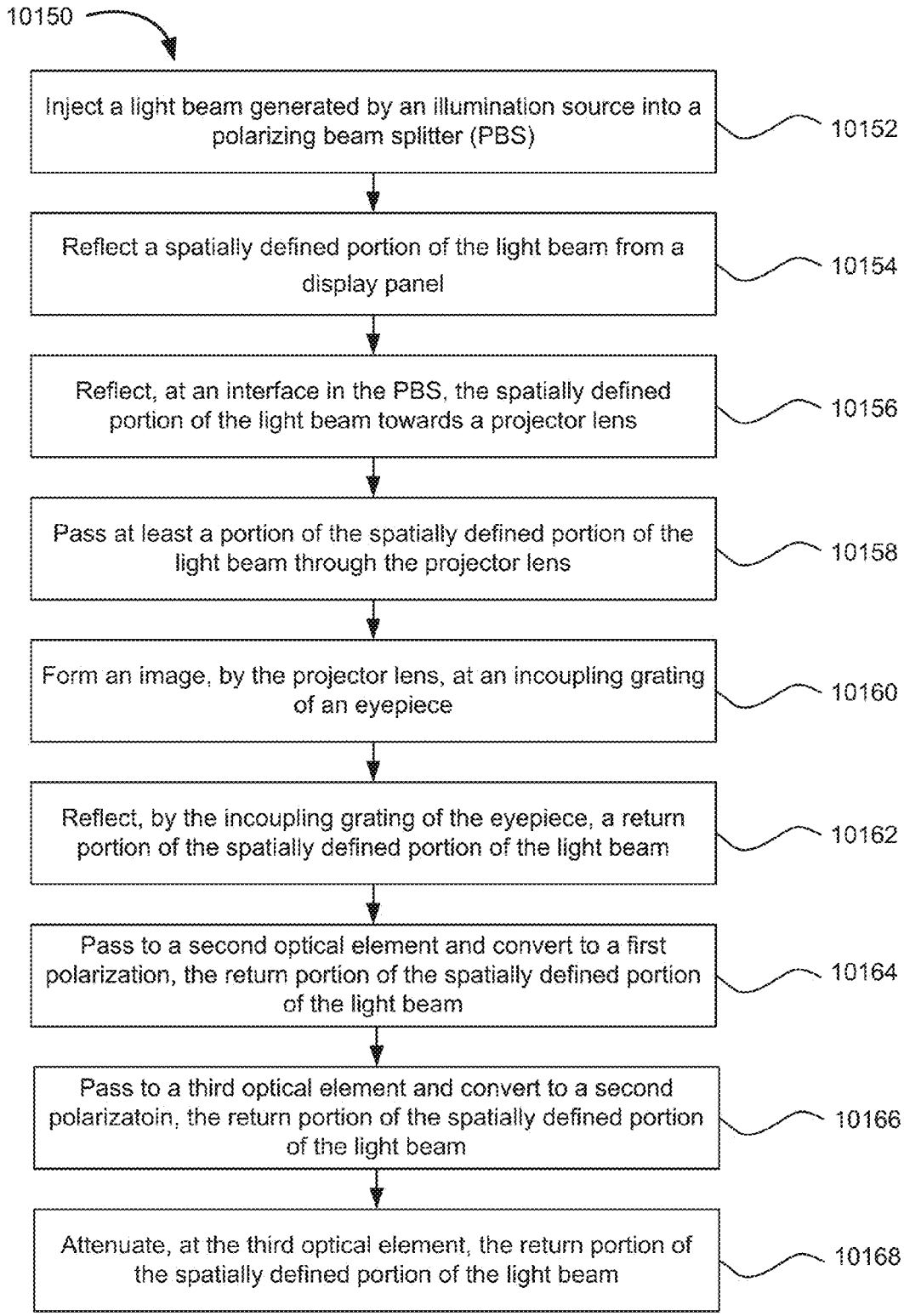
10150
Inject a light beam generated by an illumination source into a polarizing beam splitter (PBS)
10152
Reflect a spatially defined portion of the light beam from a display panel
10154
Reflect, at an interface in the PBS, the spatially defined portion of the light beam towards a projector lens
10156
Pass at least a portion of the spatially defined portion of the light beam through the projector lens
10158
Form an image, by the projector lens, at an incoupling grating of an eyepiece
10160
Reflect, by the incoupling grating of the eyepiece, a return portion of the spatially defined portion of the light beam
10162
Pass to a second optical element and convert to a first polarization, the return portion of the spatially defined portion of the light beam
10164
Pass to a third optical element and convert to a second polarizatoin, the return portion of the spatially defined portion of the light beam
10166
Attenuate, at the third optical element, the return portion of the spatially defined portion of the light beam
10168

FIG. 101B

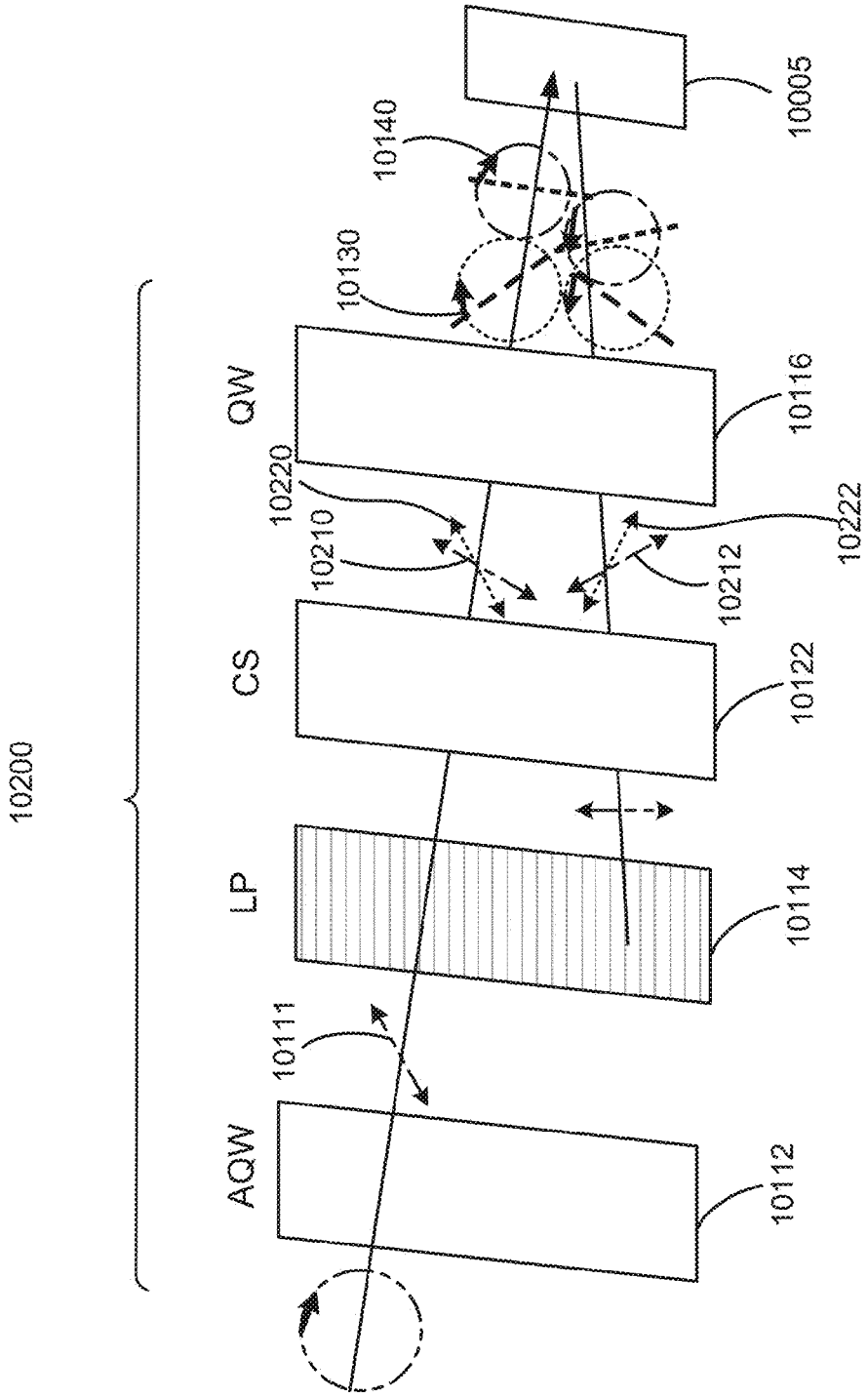
10200
AQW
LP
CS
QW
10111
10112
10114
10122
10210
10220
10212
10222
10116
10130
10140
10005

FIG. 102

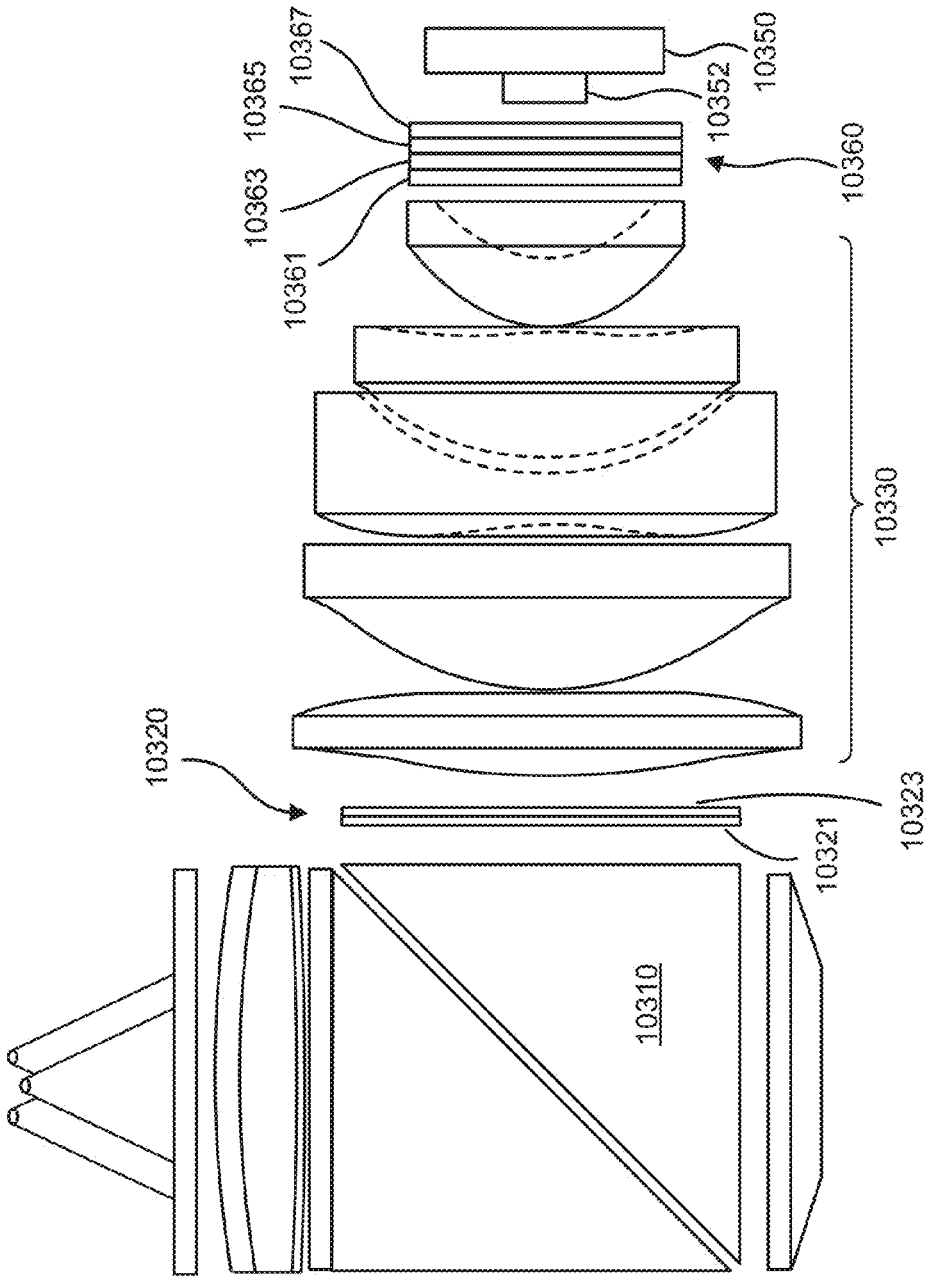
10367
10365
10363
10361
10350
10352
10360
10330
10320
10323
10321
10310

FIG. 103

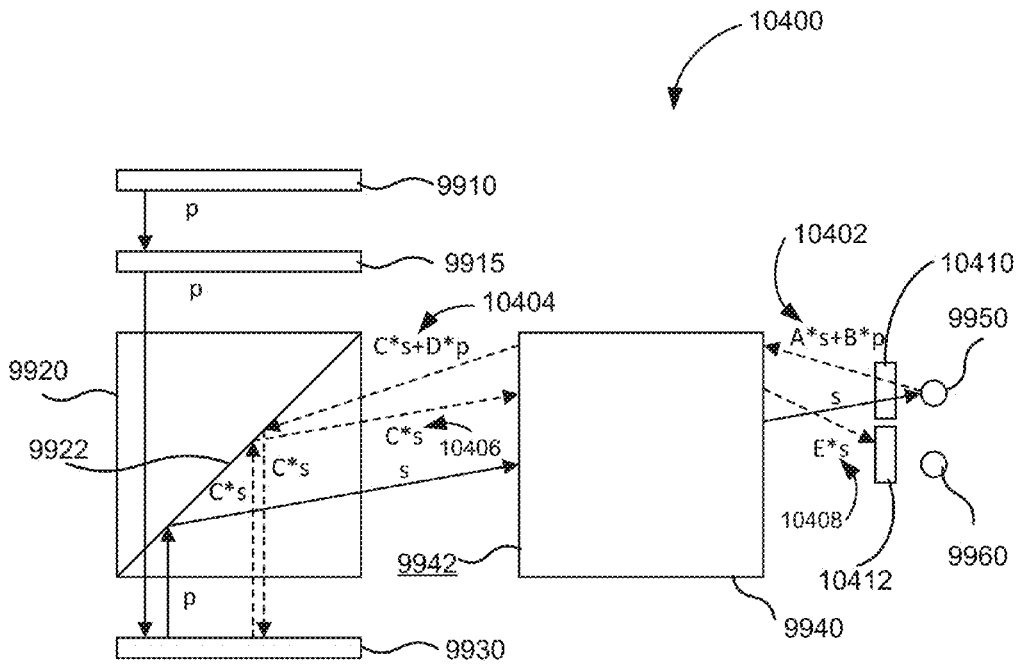
10400
9910
p
9915
p
10404
C*s+D*p
9920
9922
C*s
C*s
C*s
10406
s
9942
p
9930
10402
A*s+B*p
10410
9950
s
E*s
10408
10412
9960
9940

FIG. 104A

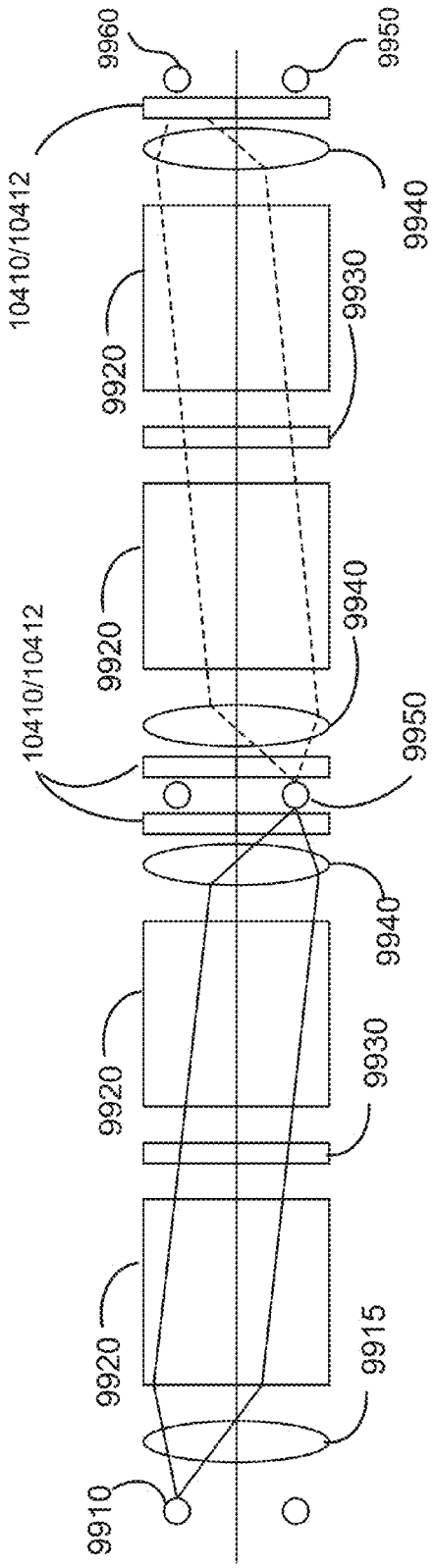
9960
9950
10410/10412
9940
9920
9930
9920
9940
10410/10412
9950
9940
9920
9930
9920
9915
9910

FIG. 104B

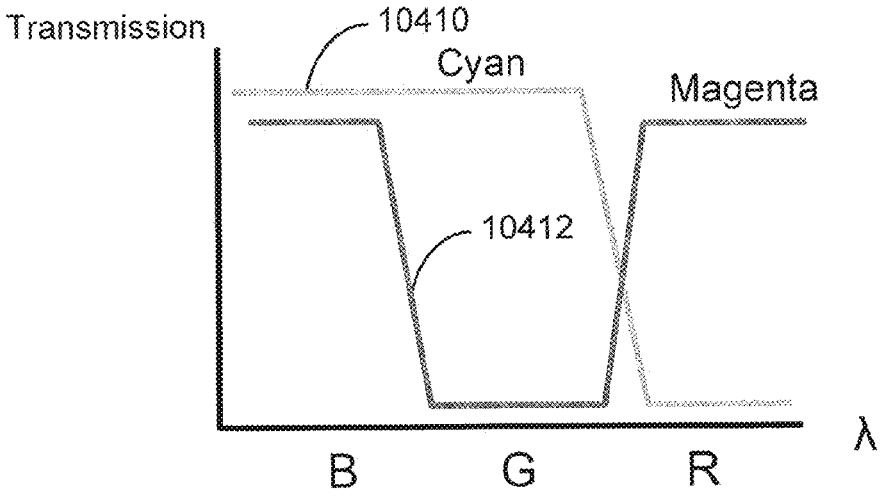

FIG. 104C

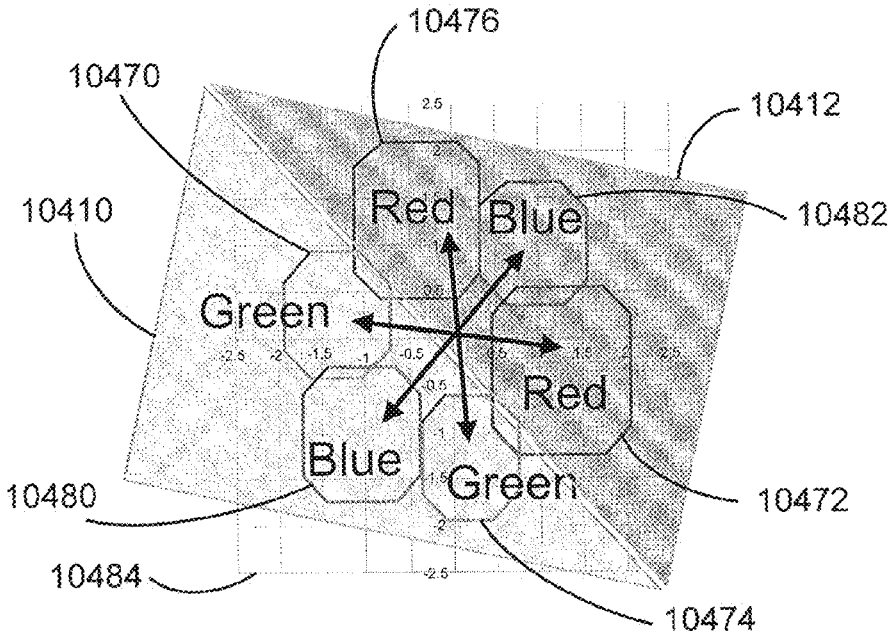

FIG. 104D

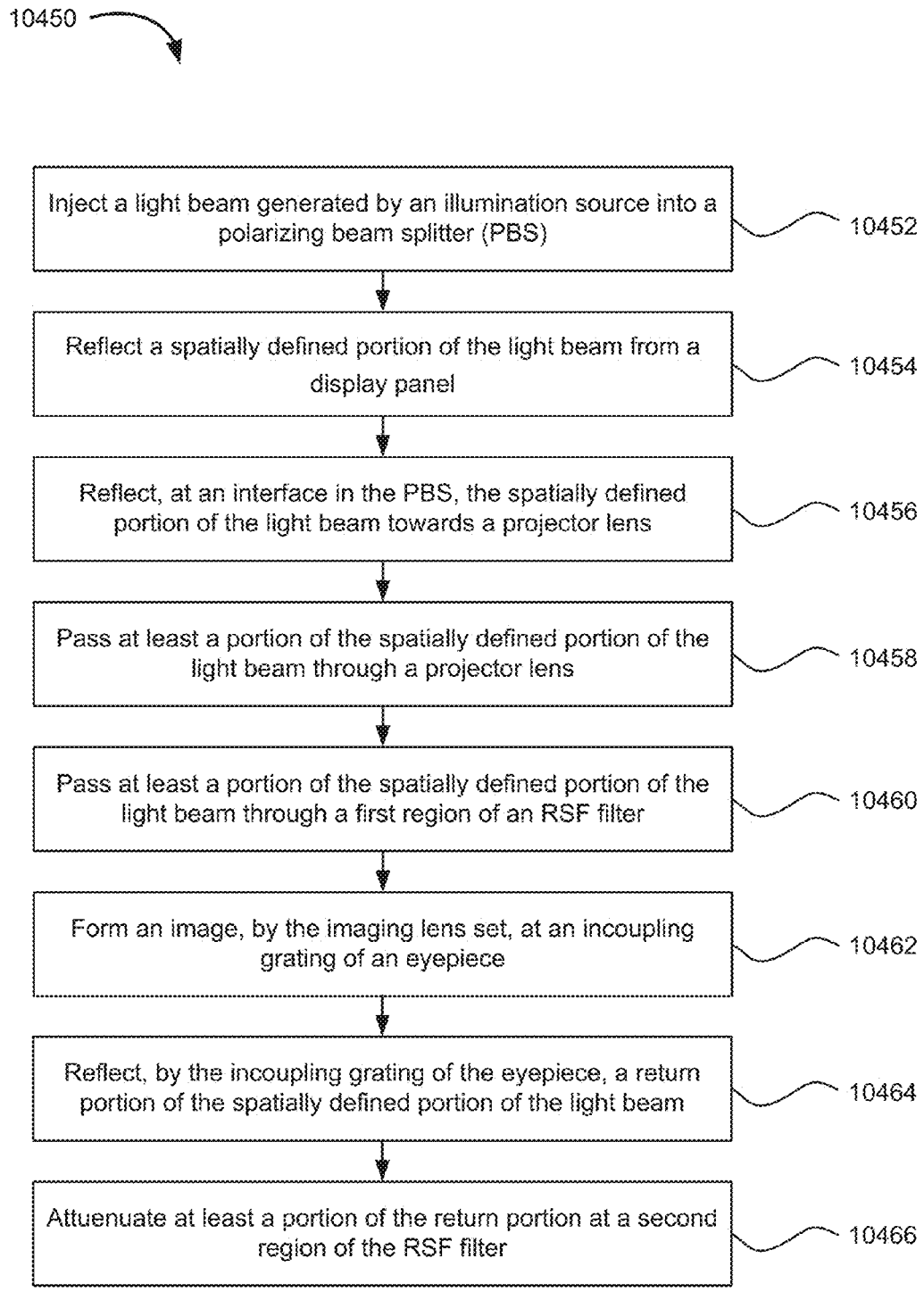
10450
Inject a light beam generated by an illumination source into a polarizing beam splitter (PBS)
10452
Reflect a spatially defined portion of the light beam from a display panel
10454
Reflect, at an interface in the PBS, the spatially defined portion of the light beam towards a projector lens
10456
Pass at least a portion of the spatially defined portion of the light beam through a projector lens
10458
Pass at least a portion of the spatially defined portion of the light beam through a first region of an RSF filter
10460
Form an image, by the imaging lens set, at an incoupling grating of an eyepiece
10462
Reflect, by the incoupling grating of the eyepiece, a return portion of the spatially defined portion of the light beam
10464
Attuenuate at least a portion of the return portion at a second region of the RSF filter
10466

FIG. 104E

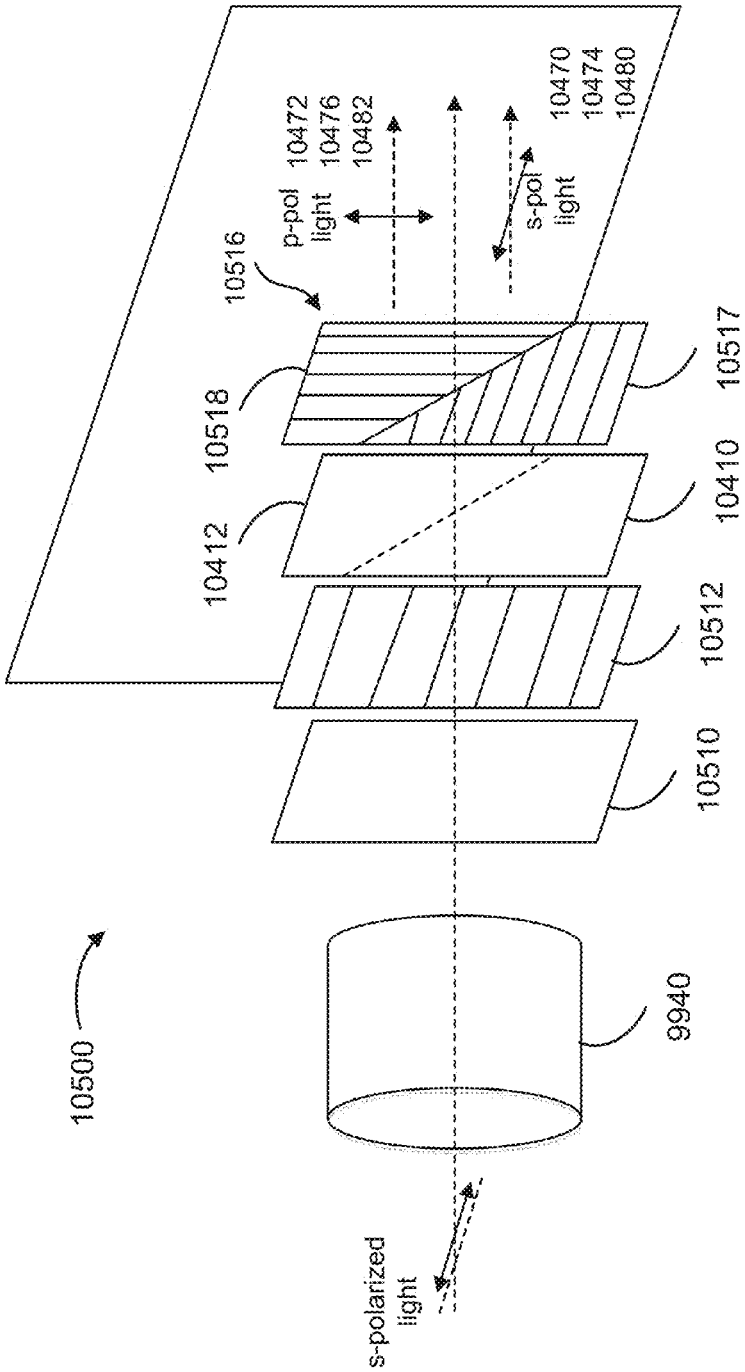
10500
s-polarized light
9940
10510
10512
10412
10410
10518
10517
10516
p-pol light
10472
10476
10482
s-pol light
10470
10474
10480

FIG. 105

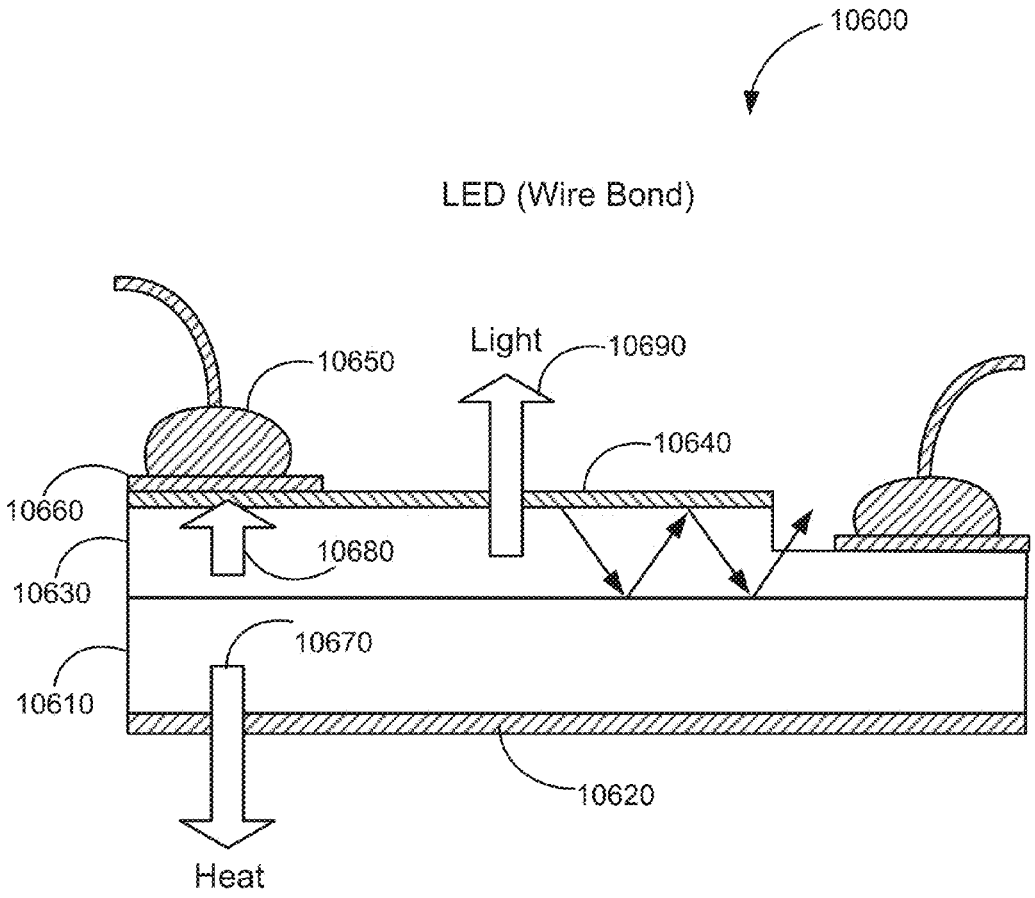
10600
LED (Wire Bond)
Light
10690
10650
10640
10660
10680
10630
10670
10610
10620
Heat

FIG. 106

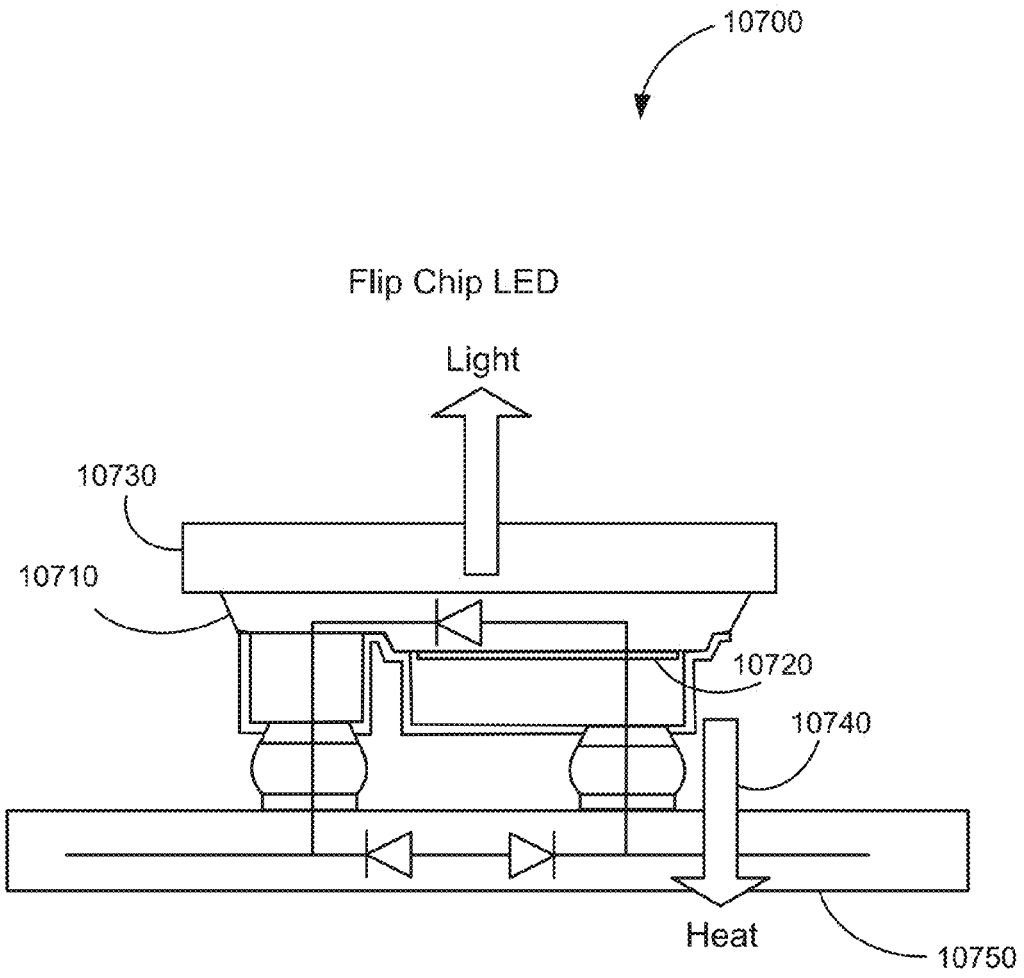
10700
Flip Chip LED
Light
10730
10710
10720
10740
Heat
10750

FIG. 107

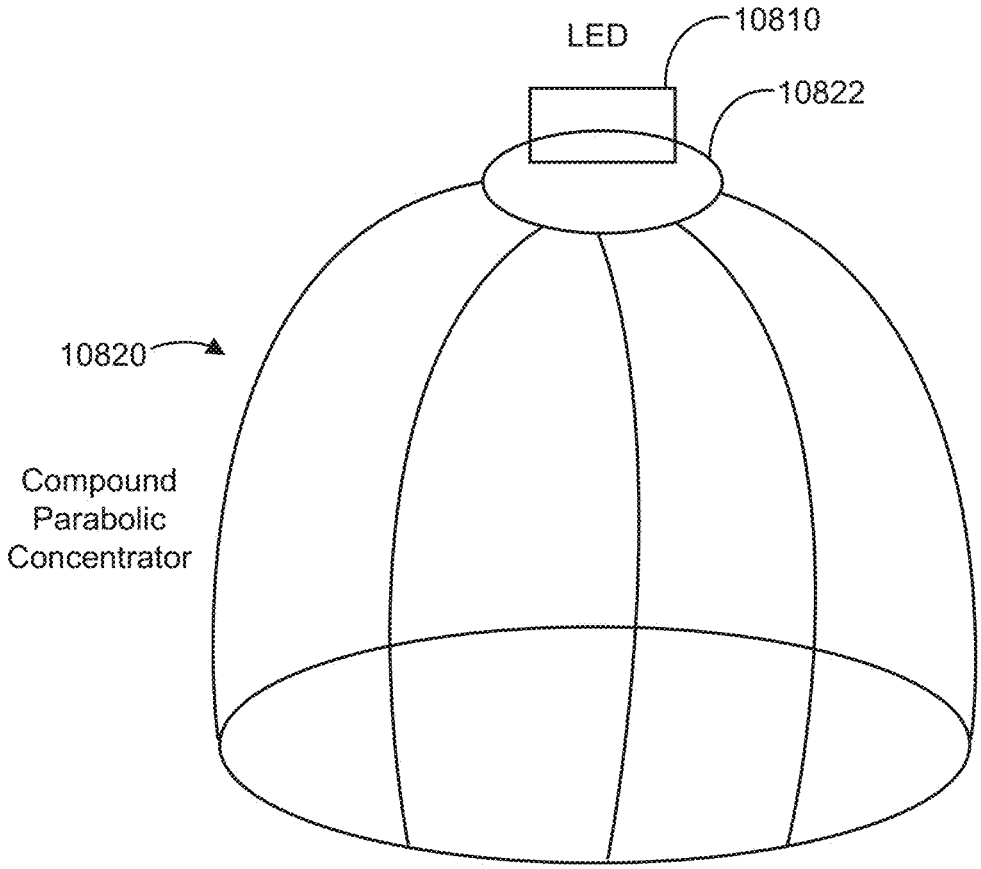

FIG. 108

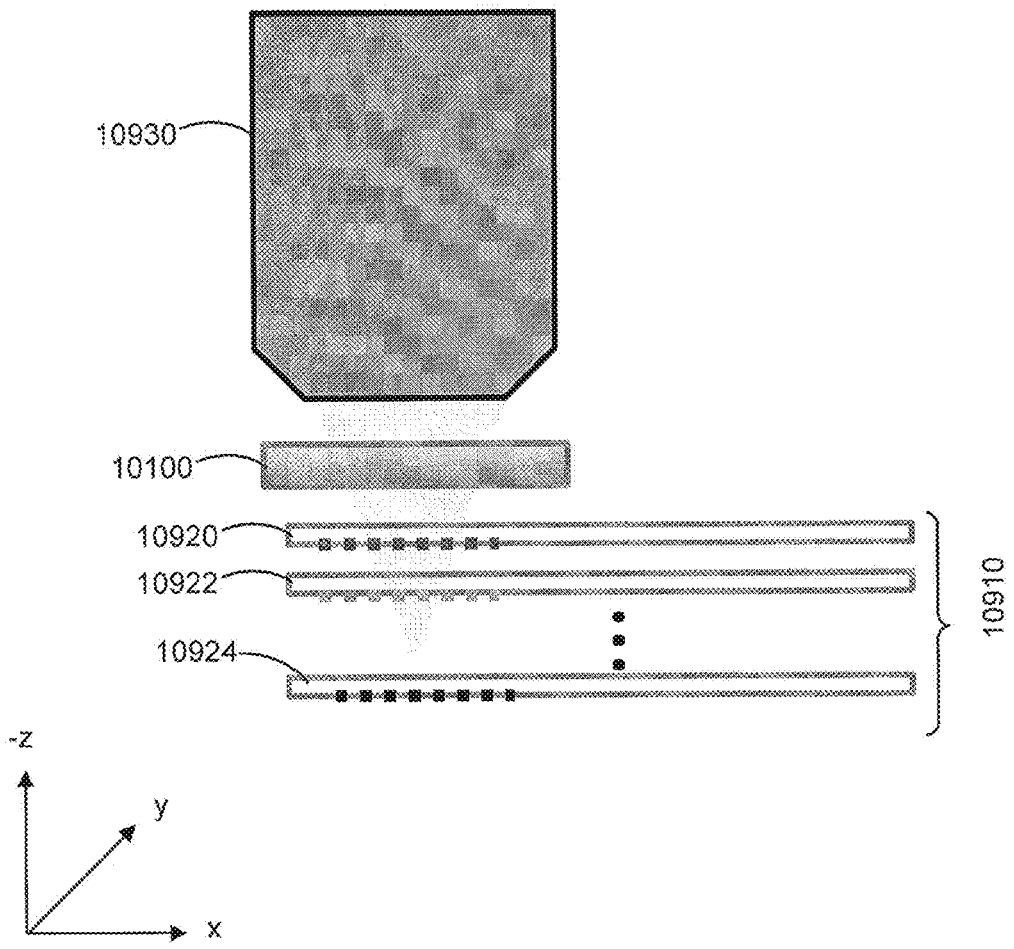

FIG. 109

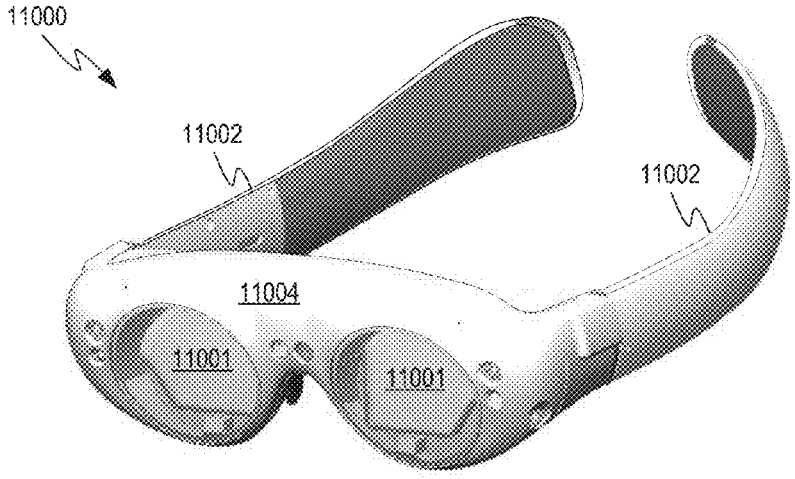

FIG. 110A

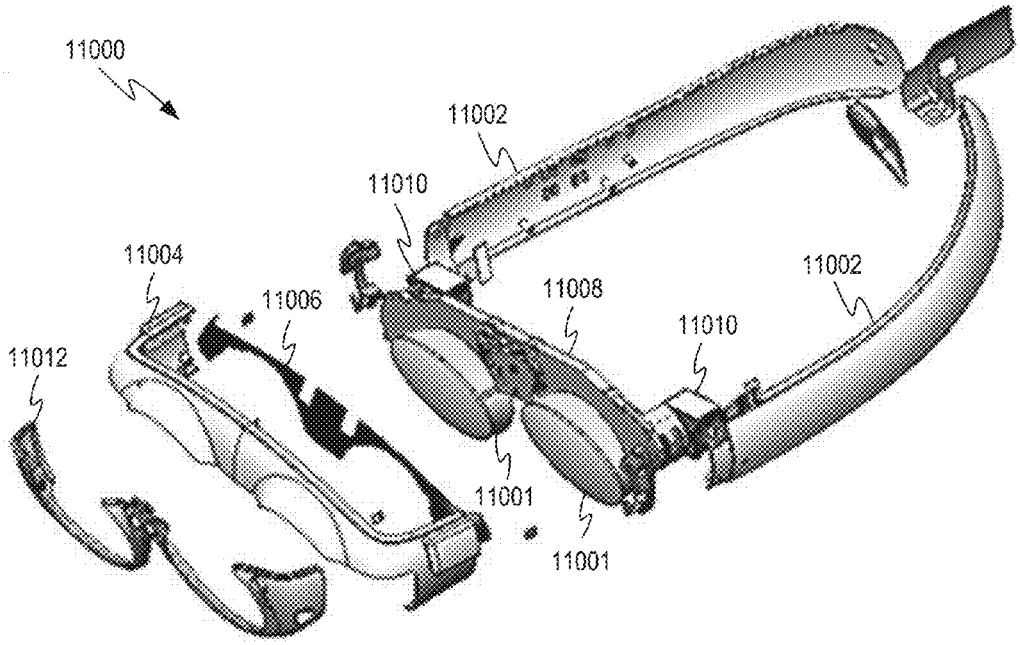

FIG. 110B

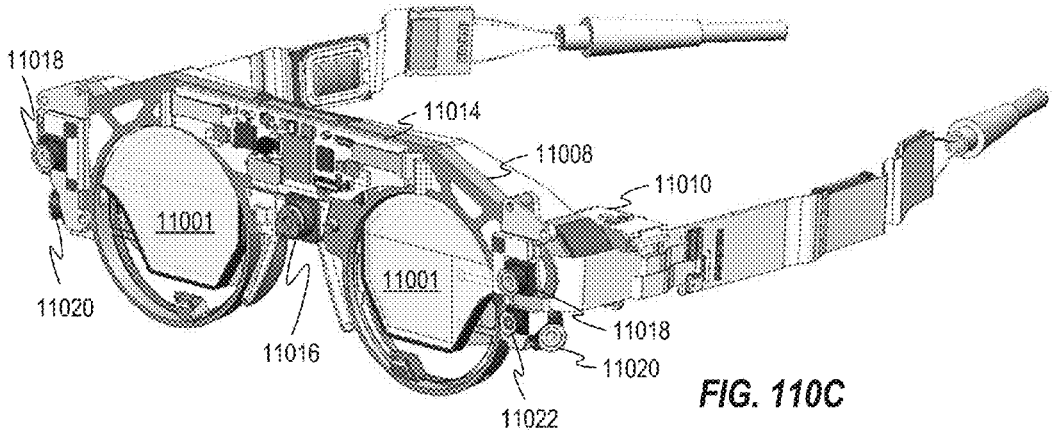

FIG. 110C

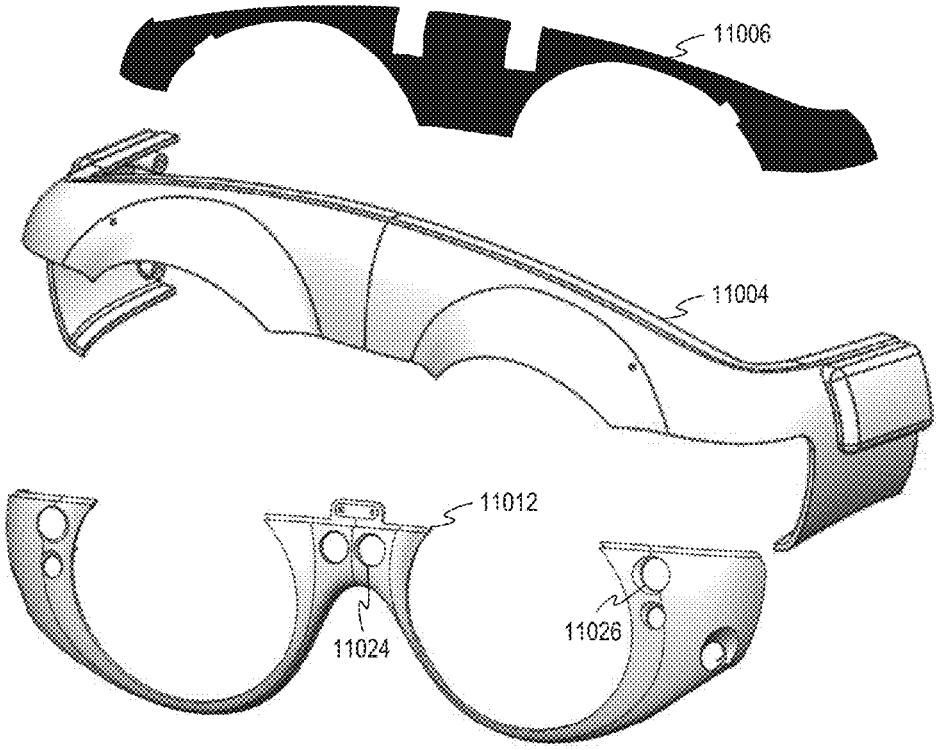

FIG. 110D

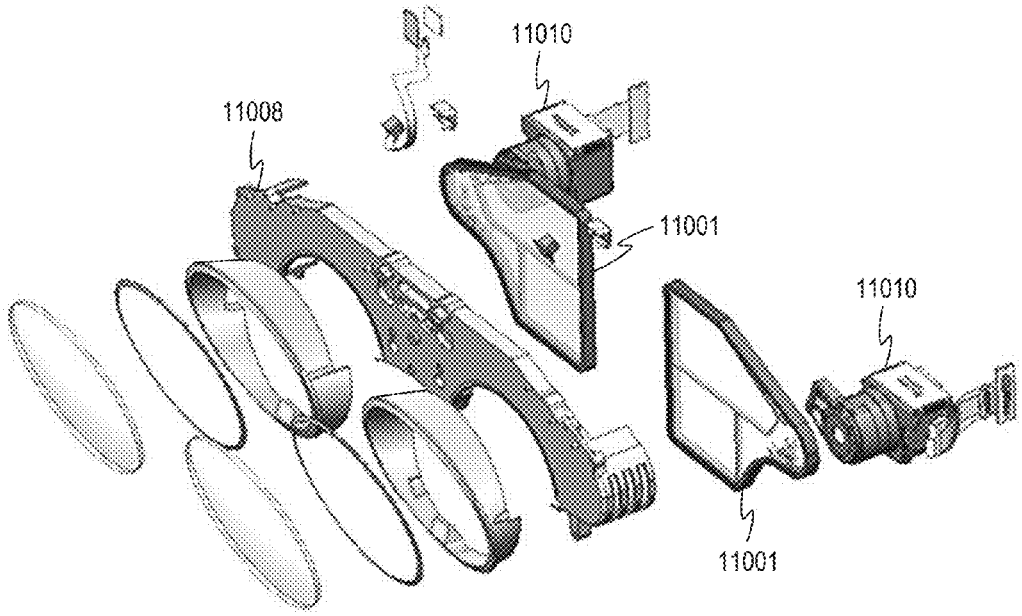

FIG. 110E

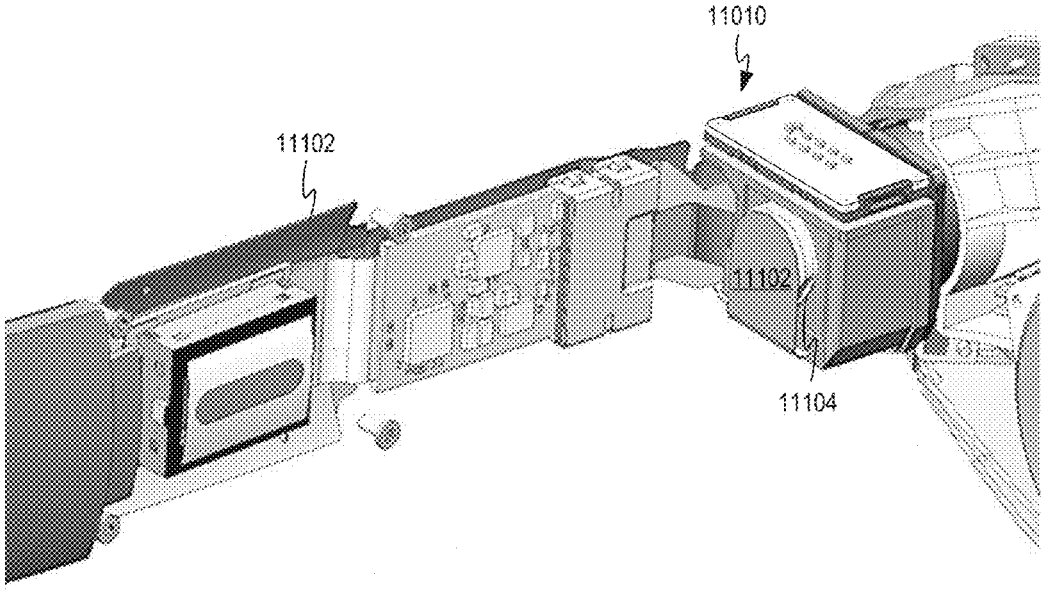

FIG. 111A

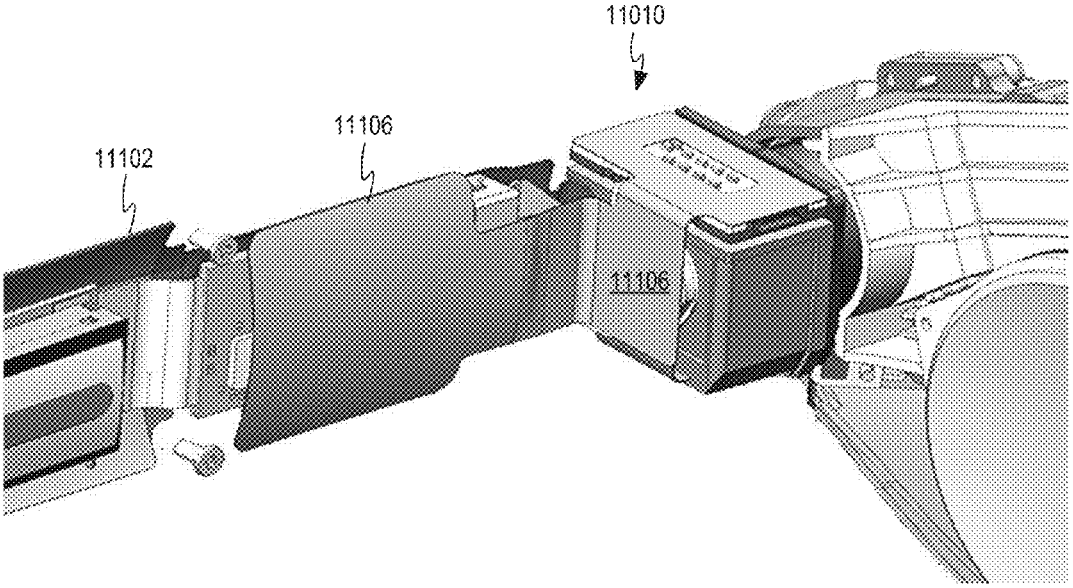

FIG. 111B

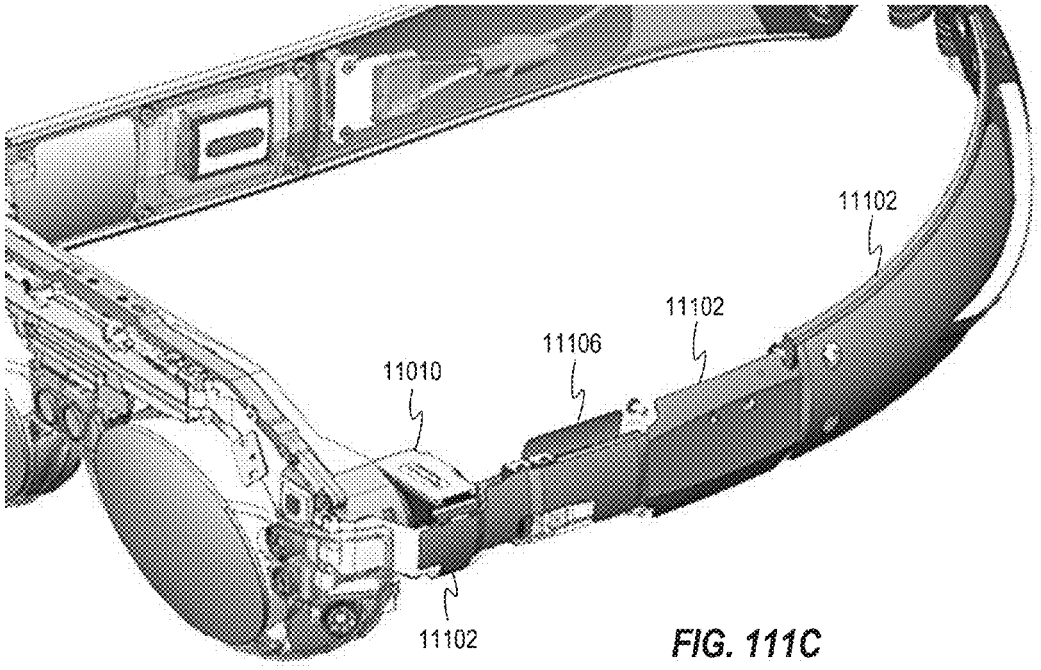

FIG. 111C

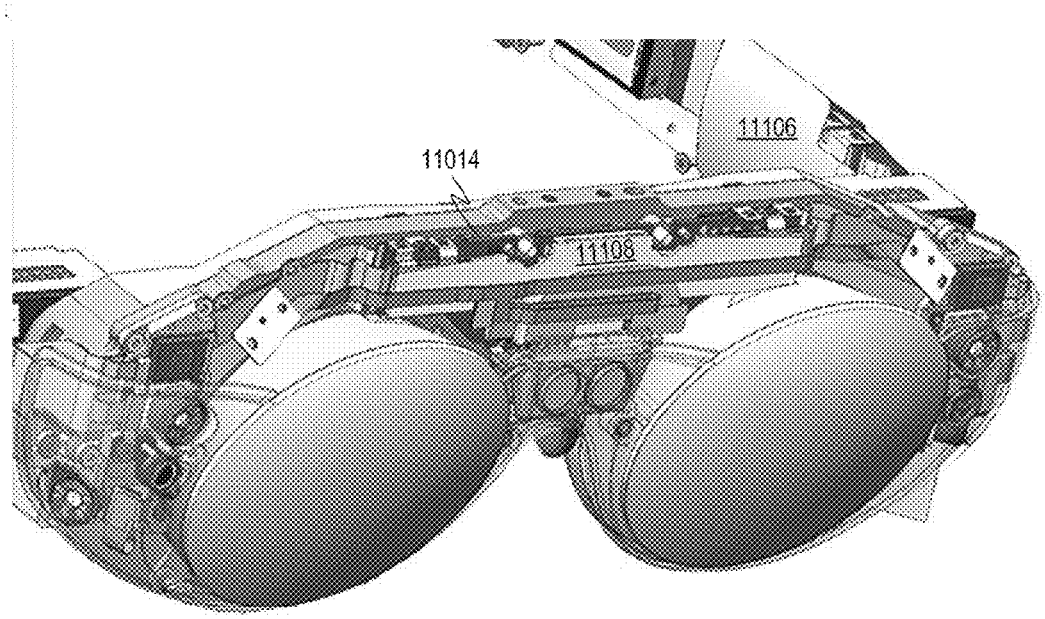

FIG. 111D

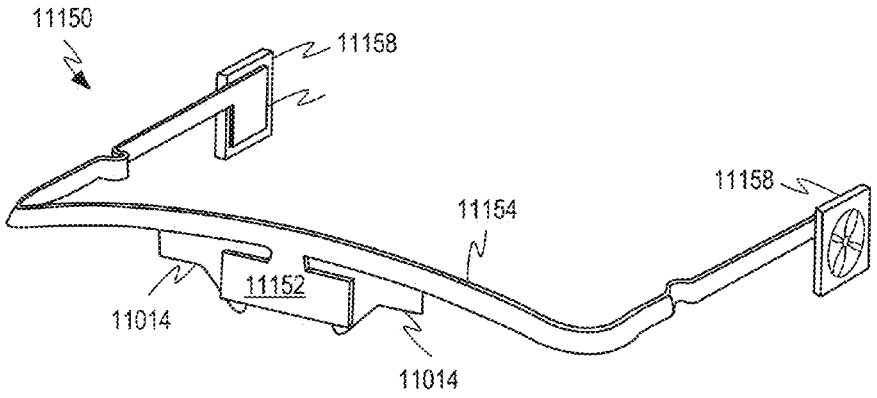

FIG. 111E

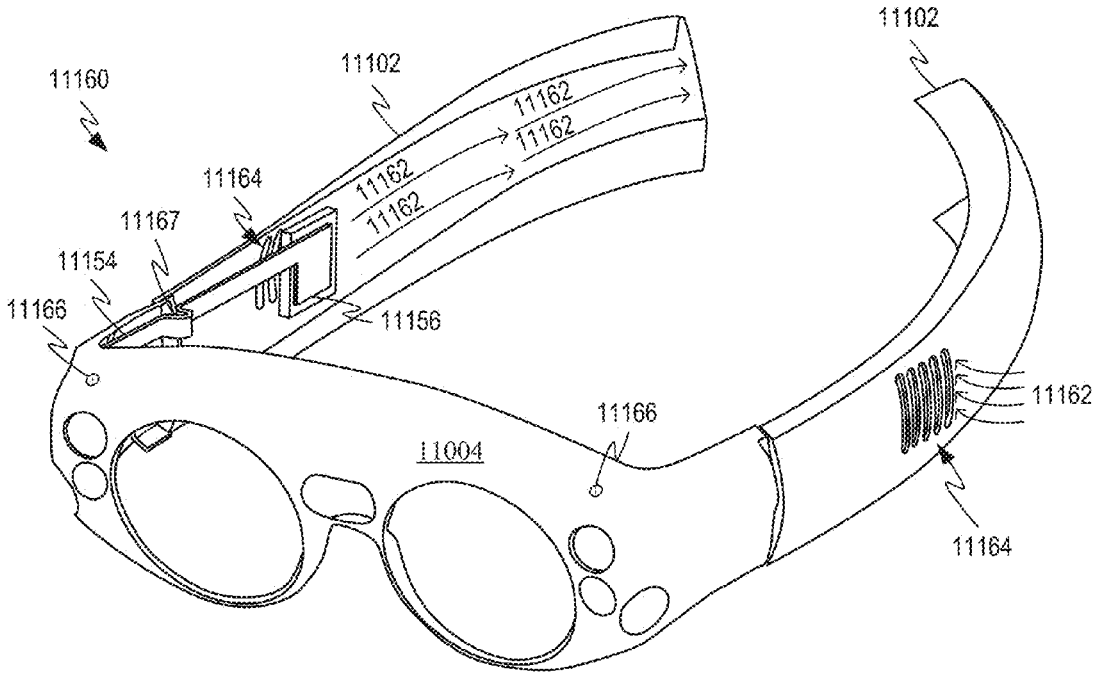

FIG. 111F

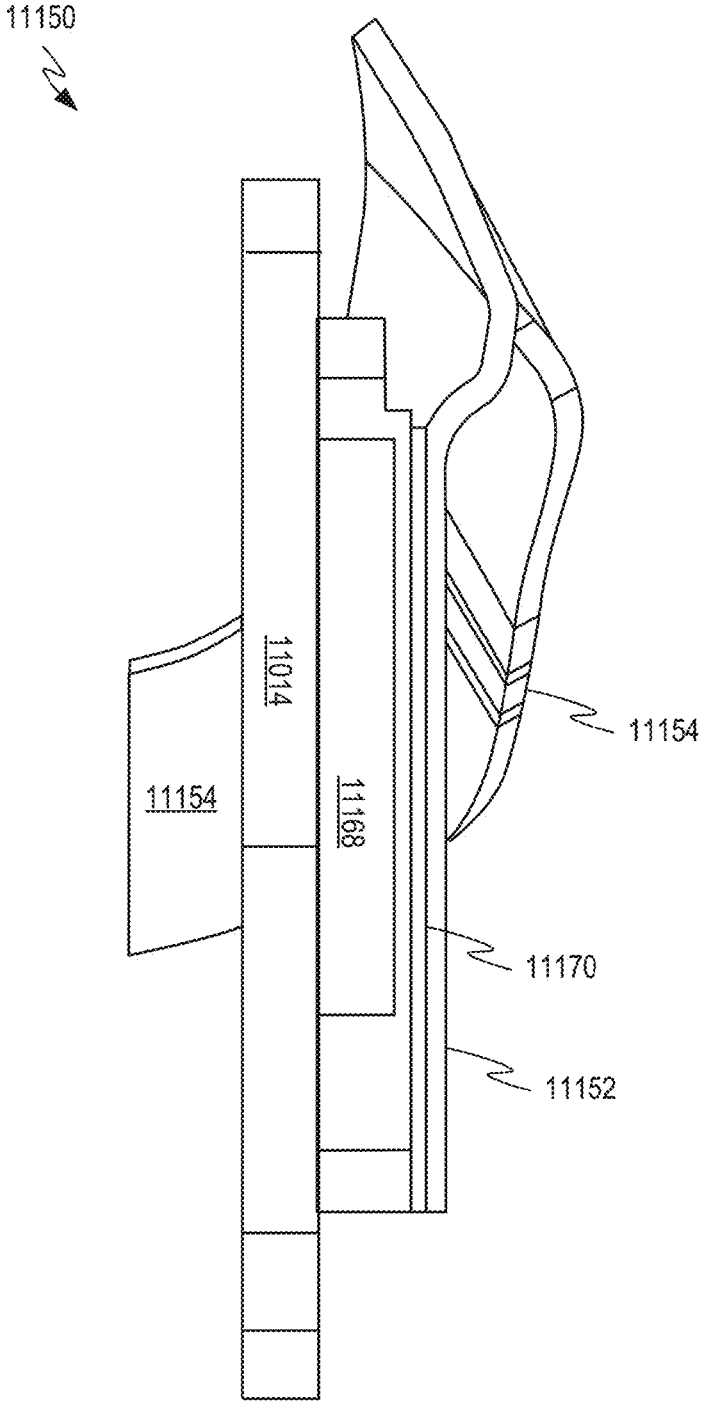

FIG. 111G

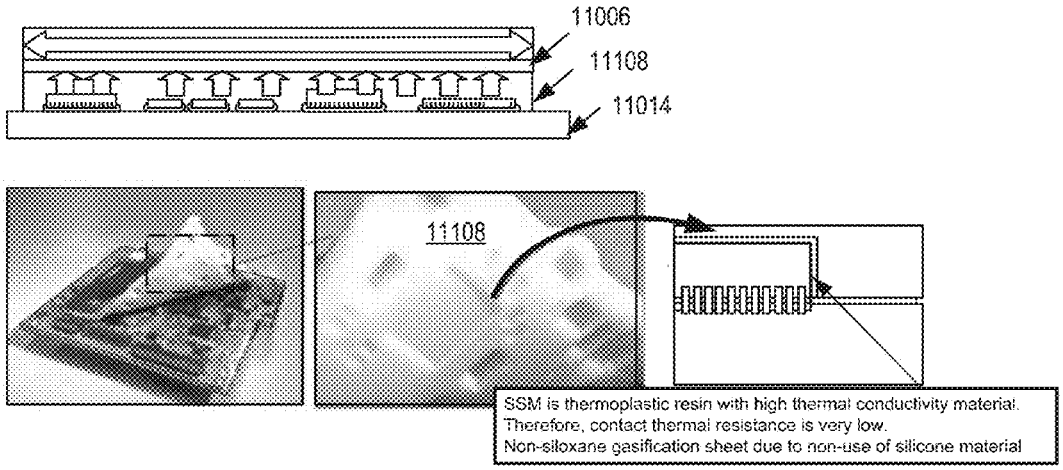

FIG. 112A

		Test Method	Condition	DATA		
				1.0mm	2.0mm	3.0mm
Thickness	(mm)	micrometer		1.054	2.101	2.934
Thermal Resistance	(C cm^2W)	TIM Tester	100 (kPa)	7.53	14.82	19.48
			200 (kPa)	6.71	13.71	16.01
			300 (kPa)	5.90	10.73	11.38
Compressibility	(%)	TIM Tester	100 (kPa)	4.93	4.05	4.43
			200 (kPa)	9.58	8.66	14.04
			300 (kPa)	18.41	22.13	40.49
Thermal Conductivity	(W/m K)	(ASTM D5470)	100 (kPa)	1.6		
Specific Heat	(J/g C)	DSC		1.4		
Density	(g/cm^2)	(JIS K 7112)		1.88		
Volume Resistivity	(Ω cm)	(JIS K 6911)		>10^14		
Dielectric Strength	(KVac/mm)	(JIS K 6249)		17		
Hardness (Type E)		(JIS K 6253)		39		
Adhesive	(mN/cm)		SUS	39		
			Al	31		
			glass	38		
Flammability Rating			UL94	V.0		

FIG. 112B

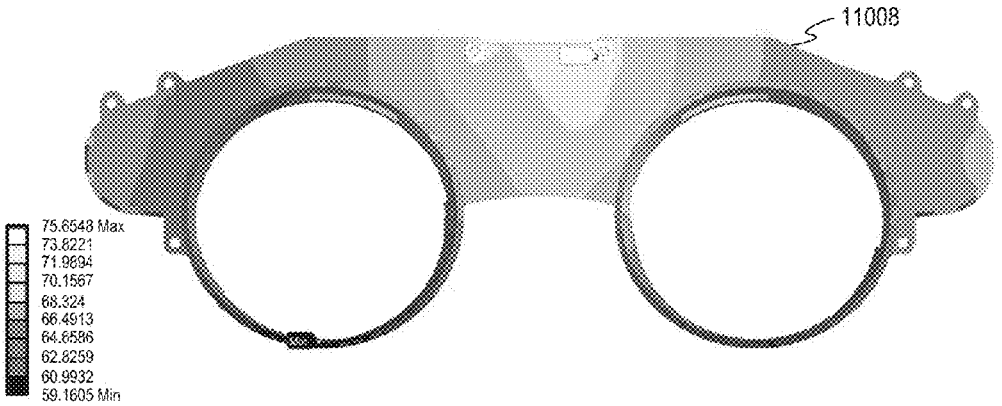

FIG. 113A

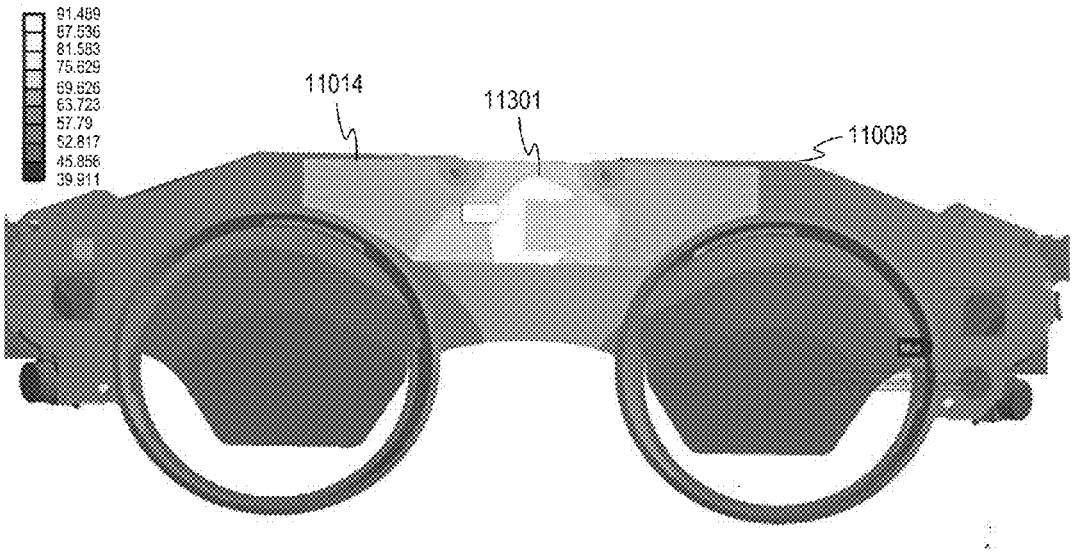

FIG. 113B

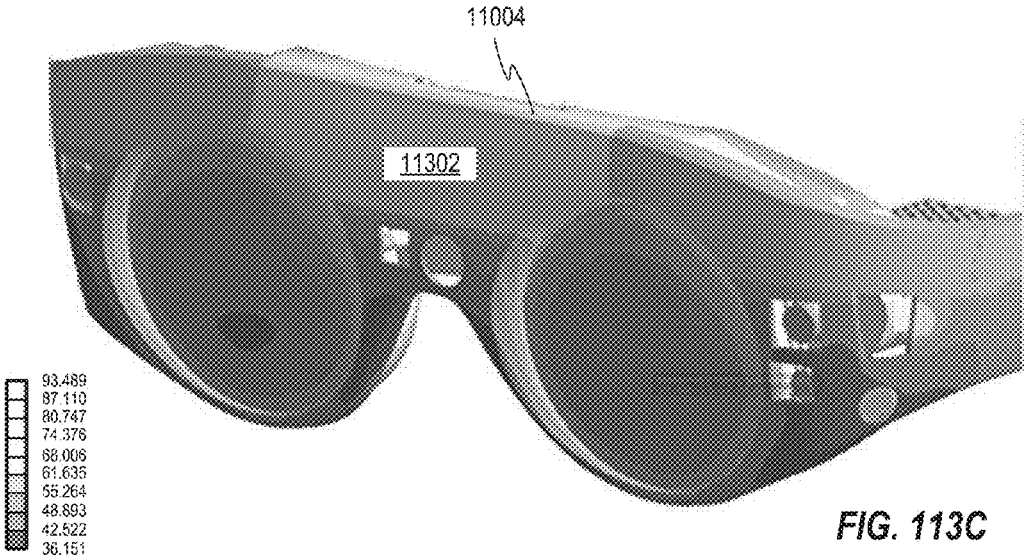

FIG. 113C

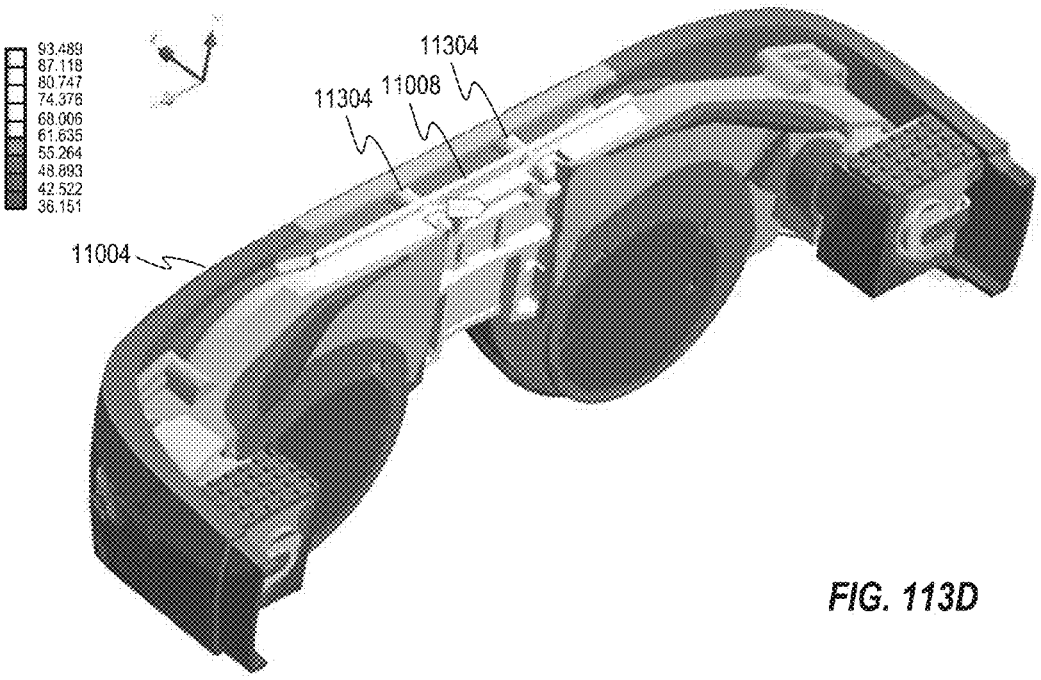

FIG. 113D

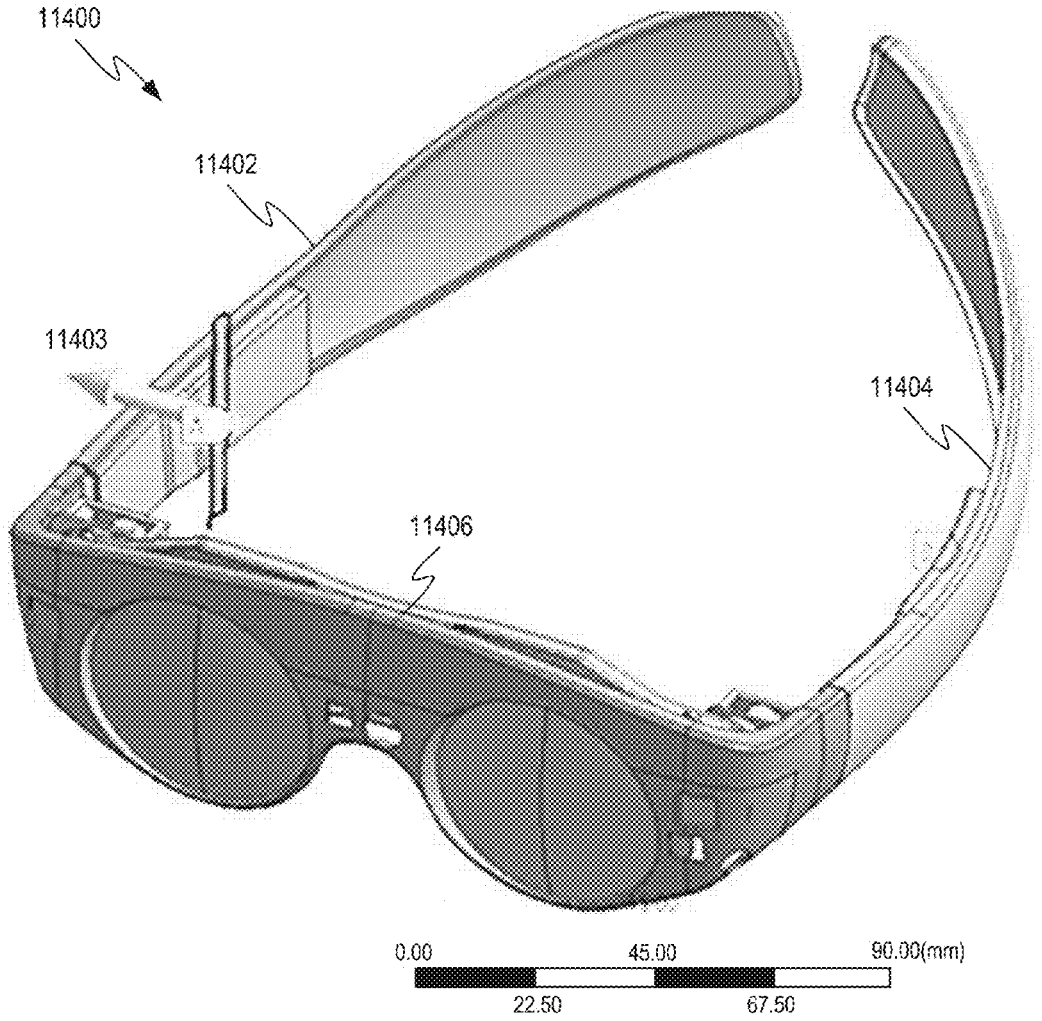

FIG. 114A

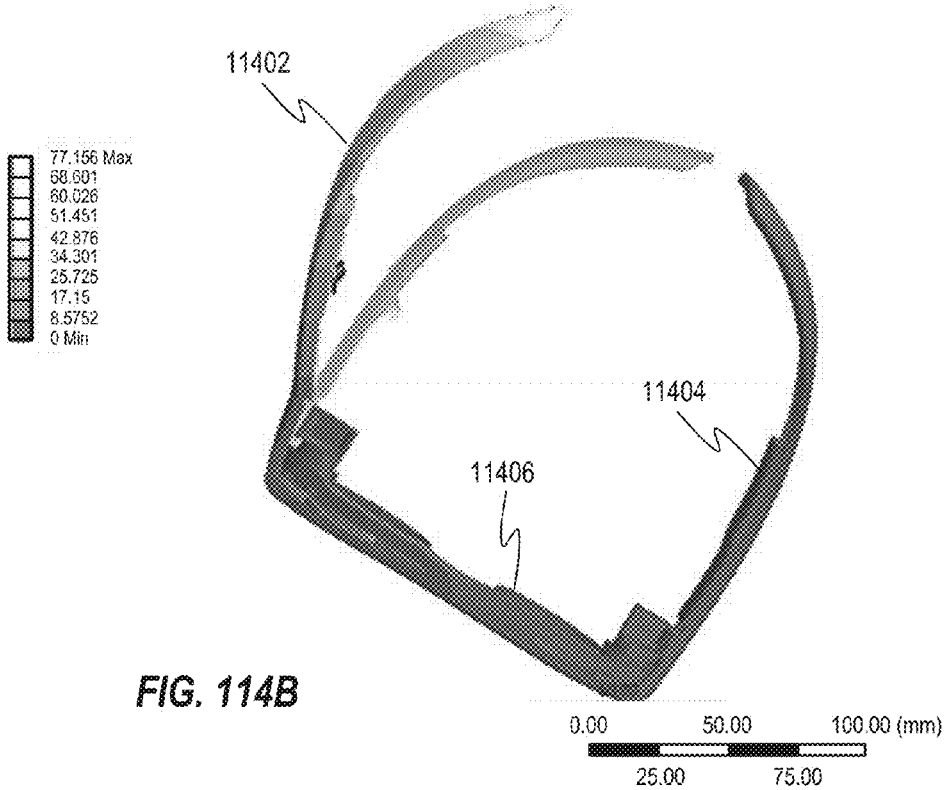

FIG. 114B

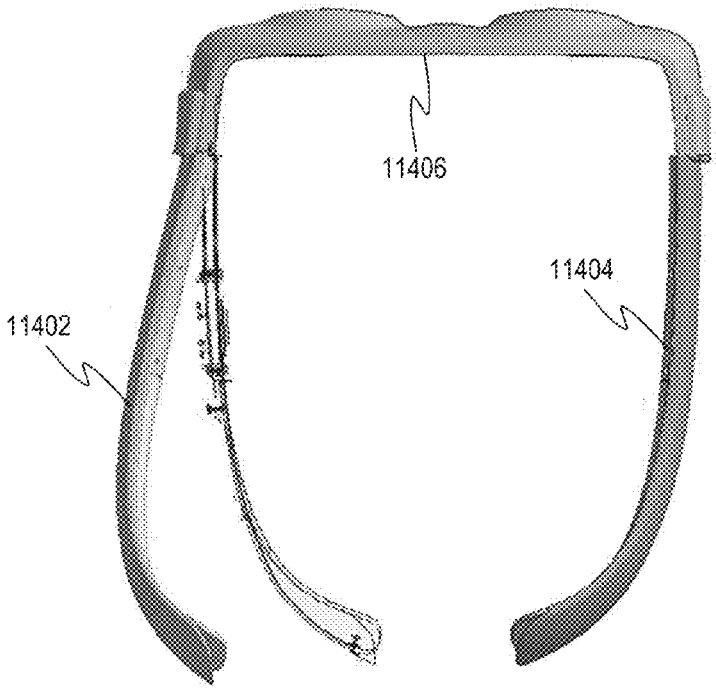

FIG. 114C

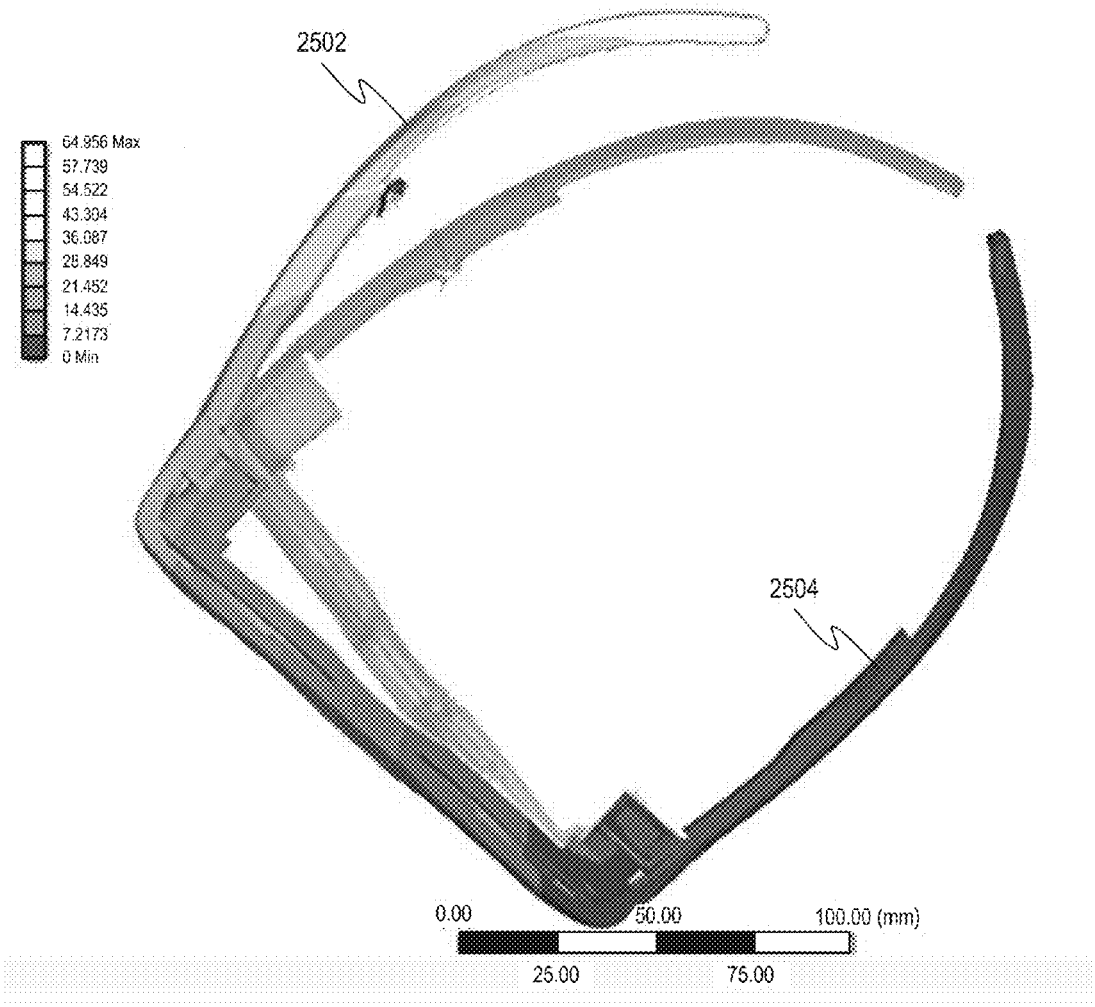
2502
64.956 Max
57.739
54.522
43.304
36.087
28.849
21.452
14.435
7.2173
0 Min
2504
0.00
50.00
100.00 (mm)
25.00
75.00

FIG. 114D

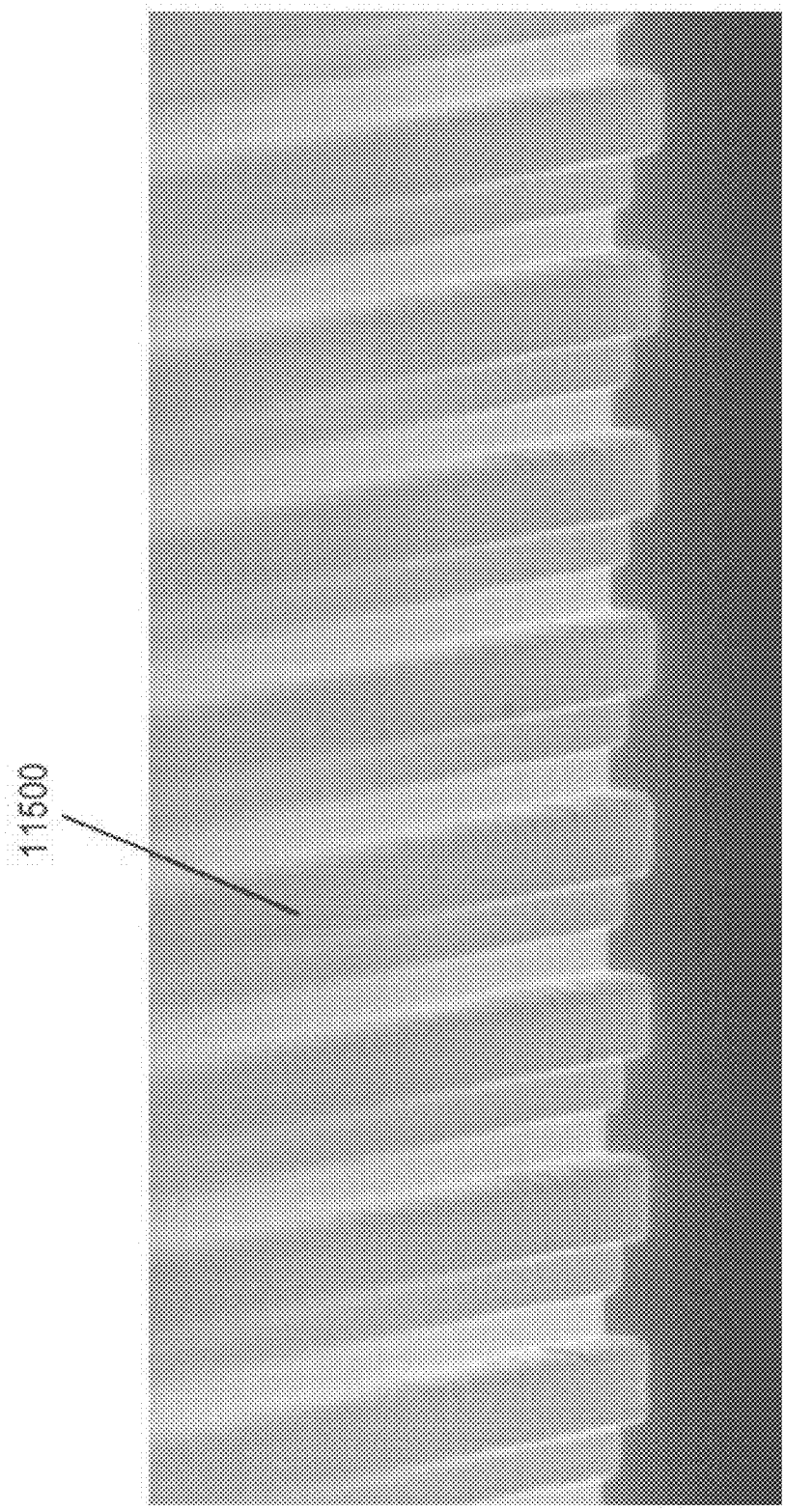

FIG. 115

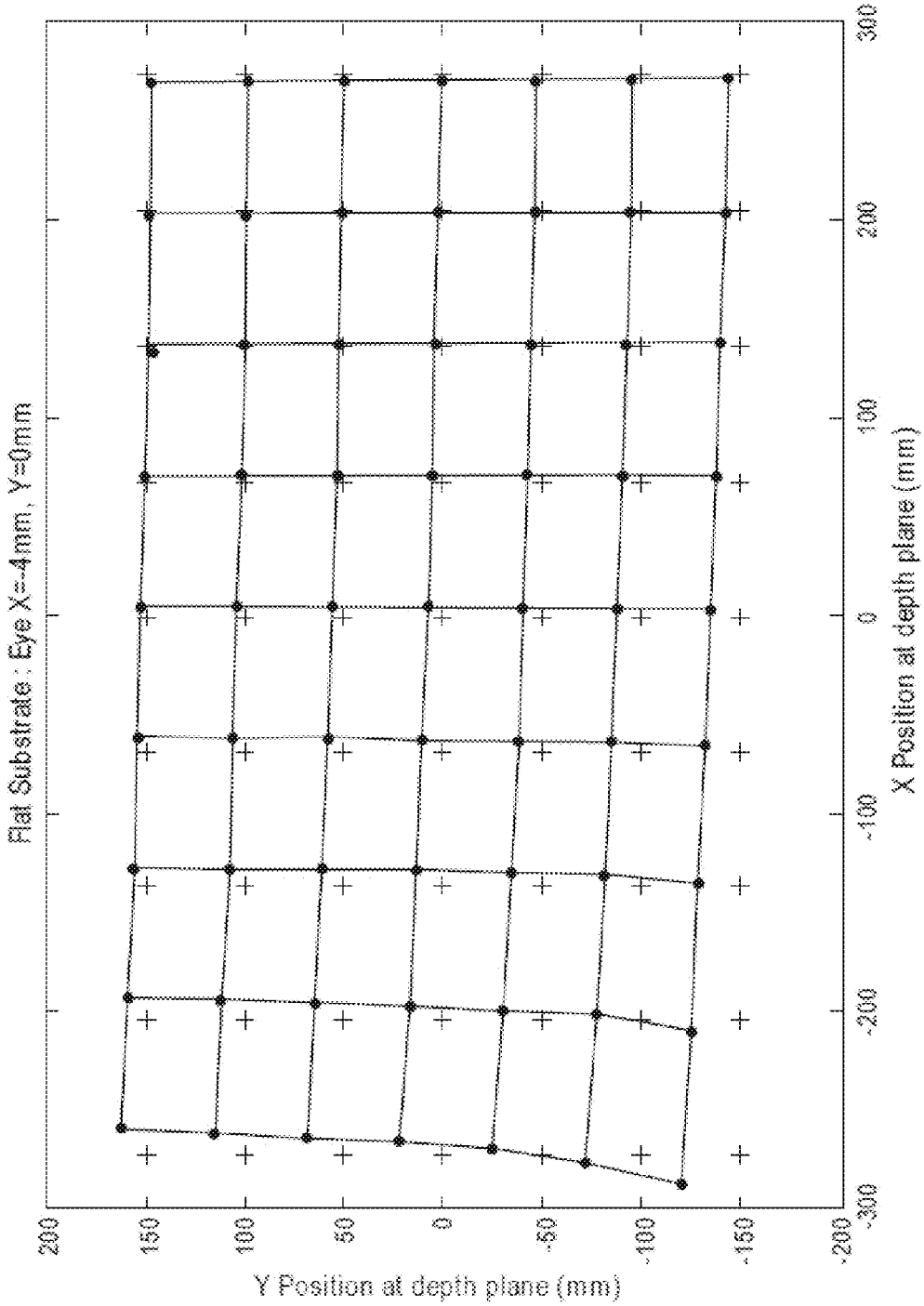
Flat Substrate : Eye X=-4mm, Y=0mm
Y Position at depth plane (mm)
200
150
100
50
0
-50
-100
-150
-200
X Position at depth plane (mm)
-300
-200
-100
0
100
200
300

FIG. 116A

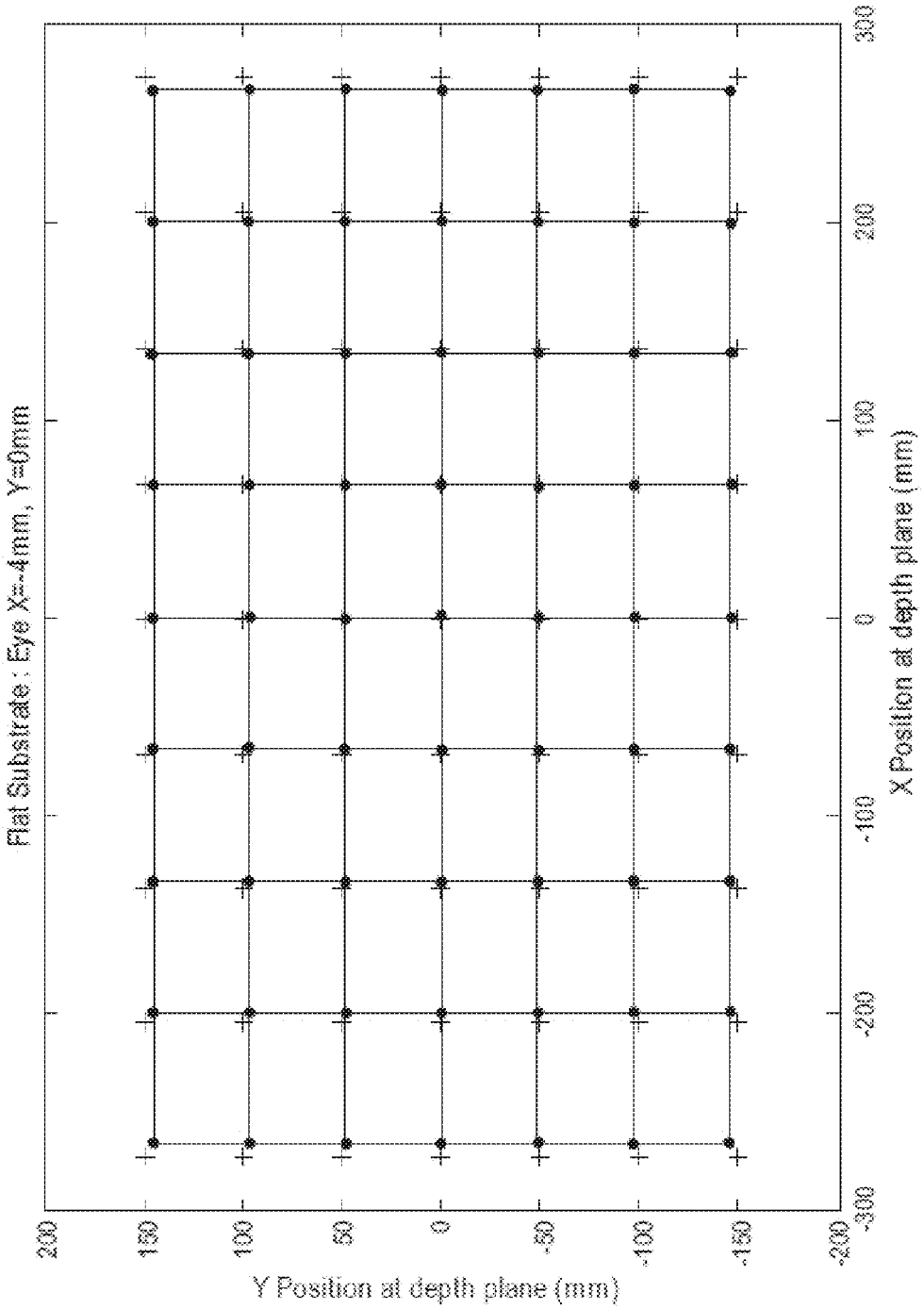
Flat Substrate : Eye X=-4mm, Y=0mm
Y Position at depth plane (mm)
200
150
100
50
0
-50
-100
-150
-200
X Position at depth plane (mm)
-300
-200
-100
0
100
200
300

FIG. 116B

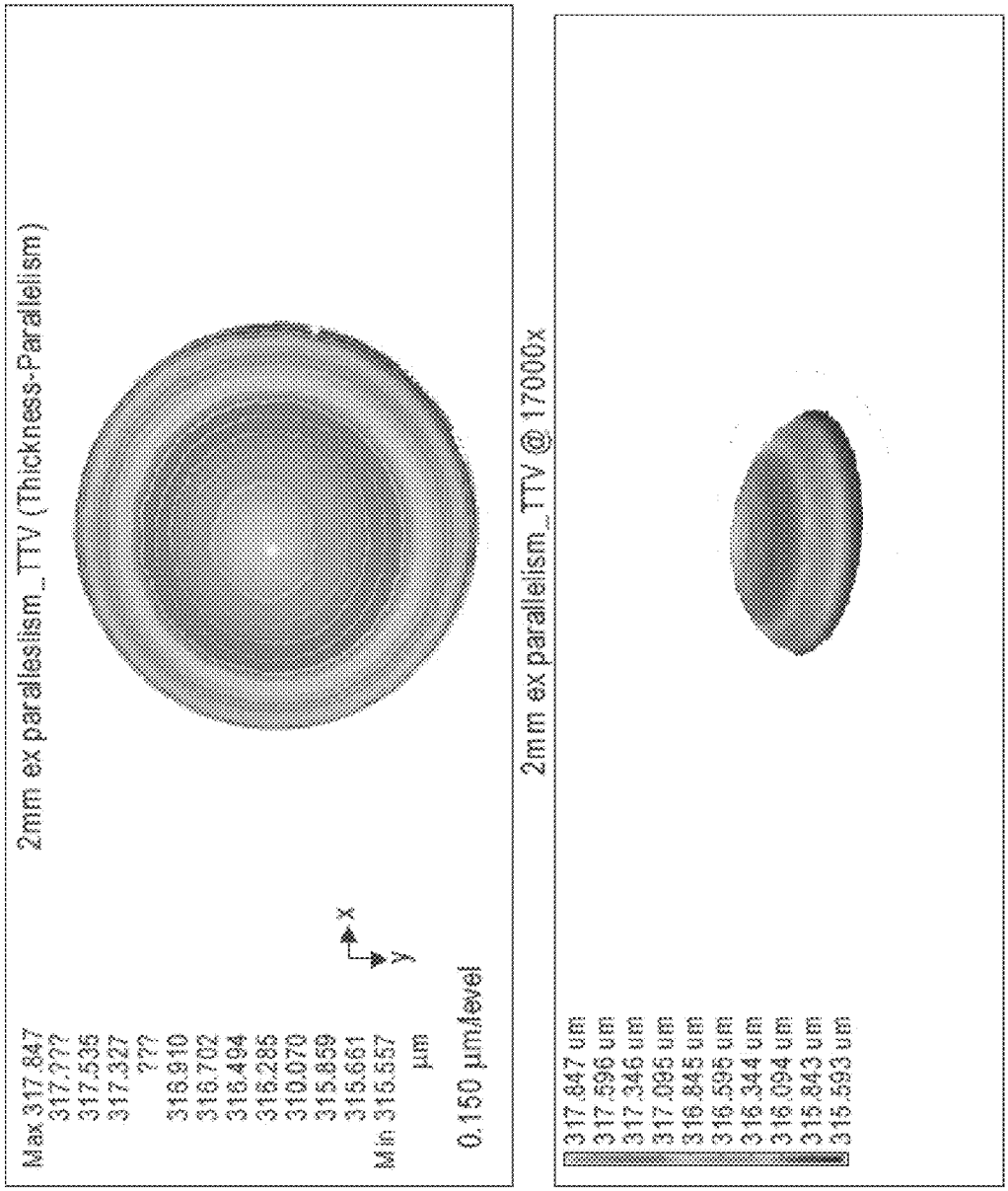
2mm ex parallelism_TTV (Thickness-Parallelism)
Max 317.847
317.777
317.536
317.327
777
316.910
316.702
316.494
316.285
316.070
315.859
315.661
Min 315.557
µm
0.150 µm/level
x
y
2mm ex parallelism_TTV @ 17000x
317.847 um
317.596 um
317.346 um
317.095 um
316.845 um
316.595 um
316.344 um
316.094 um
315.843 um
315.593 um

FIG. 116C

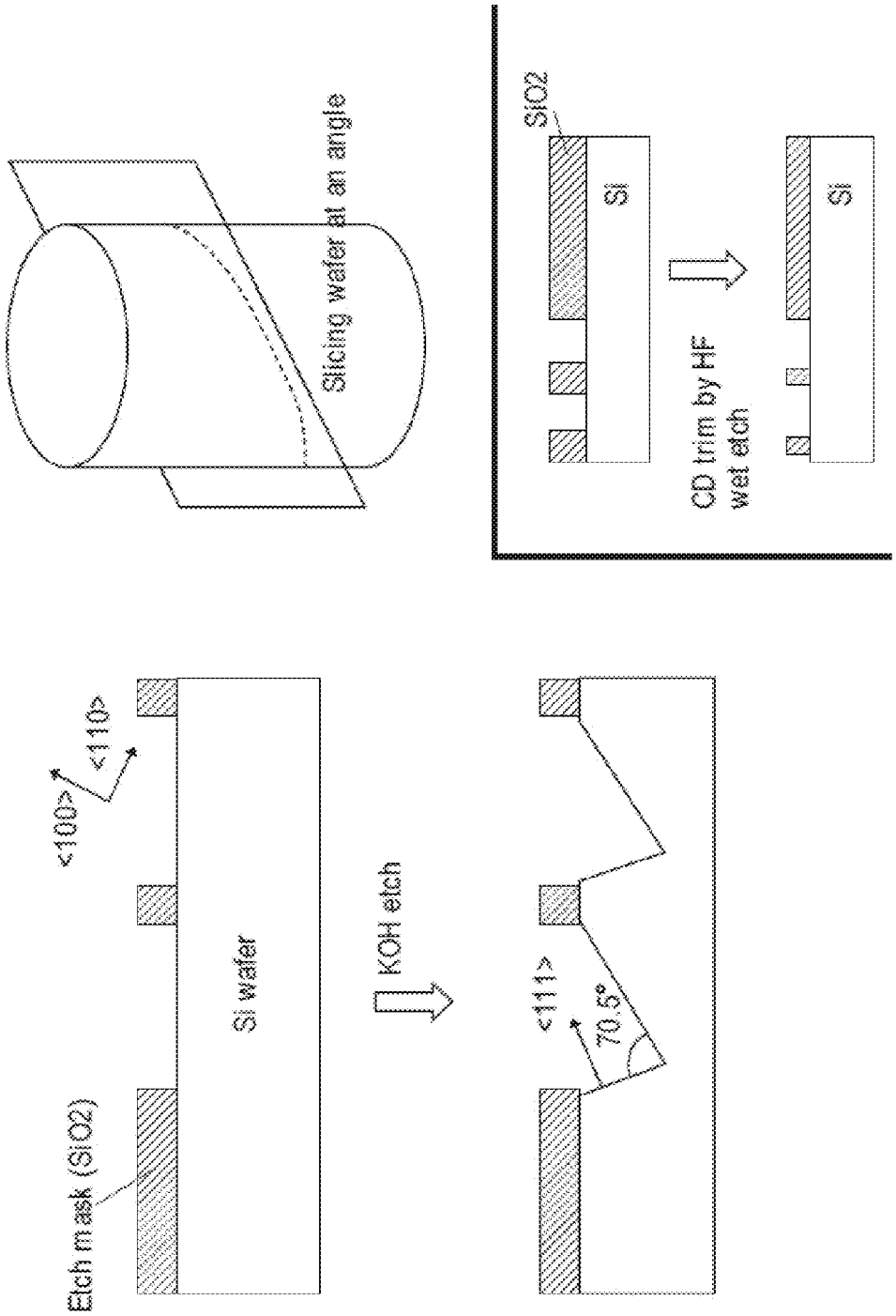
Slicing wafer at an angle
SiO2
Si
CD trim by HF
wet etch
Si
<100>
<110>
Etch mask (SiO2)
Si wafer
KOH etch
<111>
70.5°

FIG. 117A

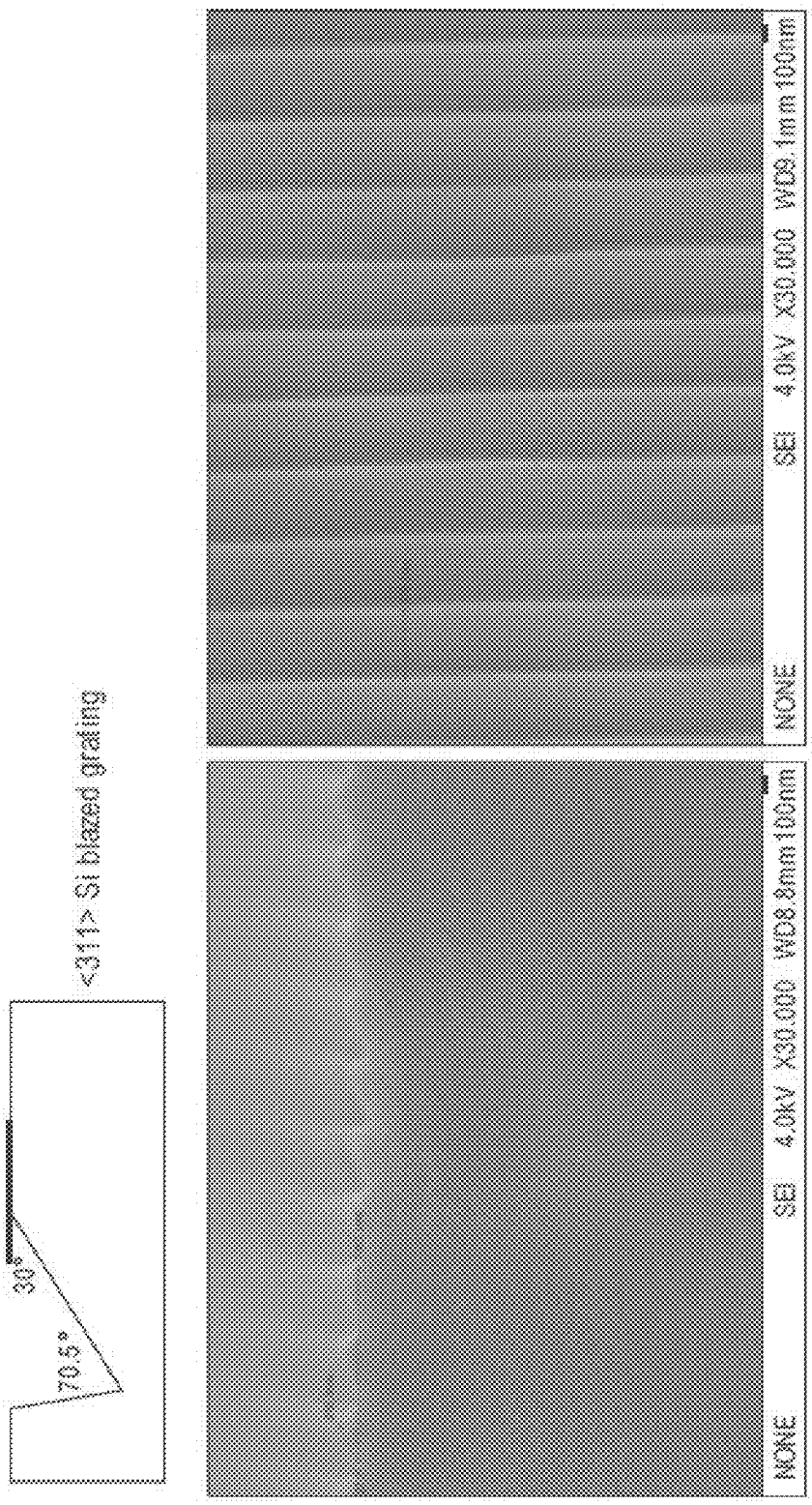
<311> Si blazed grating
30°
70.5°
NONE
SEI 4.0kV X30,000 WD8.8mm 100nm
NONE
SEI 4.0kV X30,000 WD9.1mm 100nm

FIG. 117B

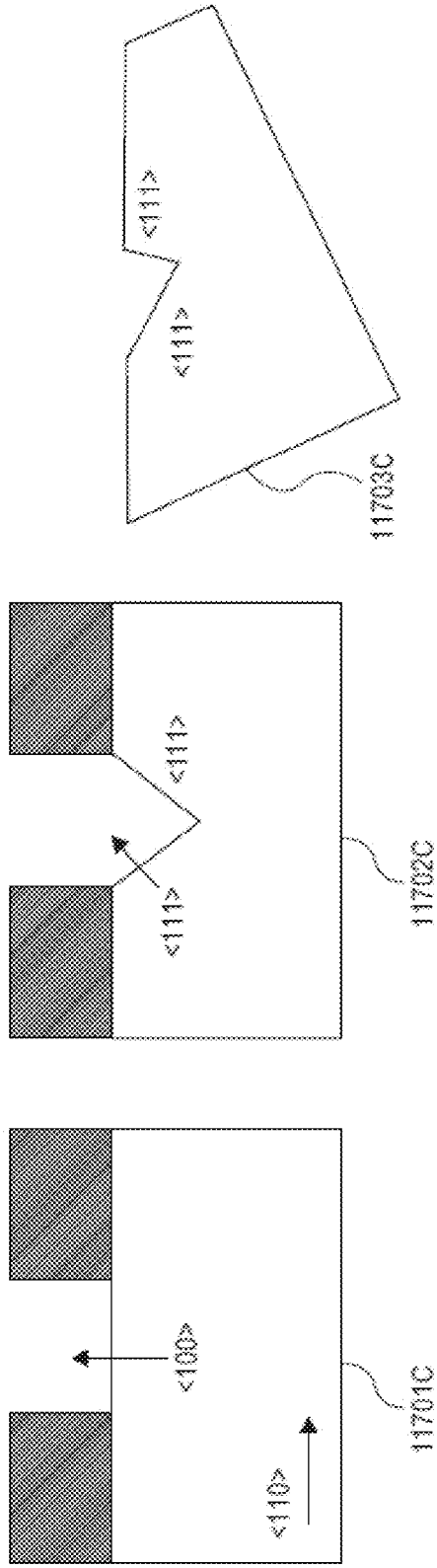

FIG. 117C

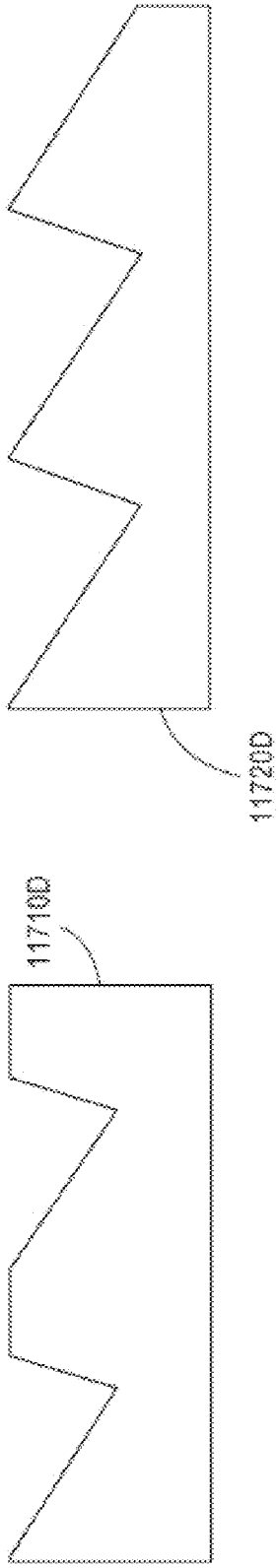

FIG. 117D

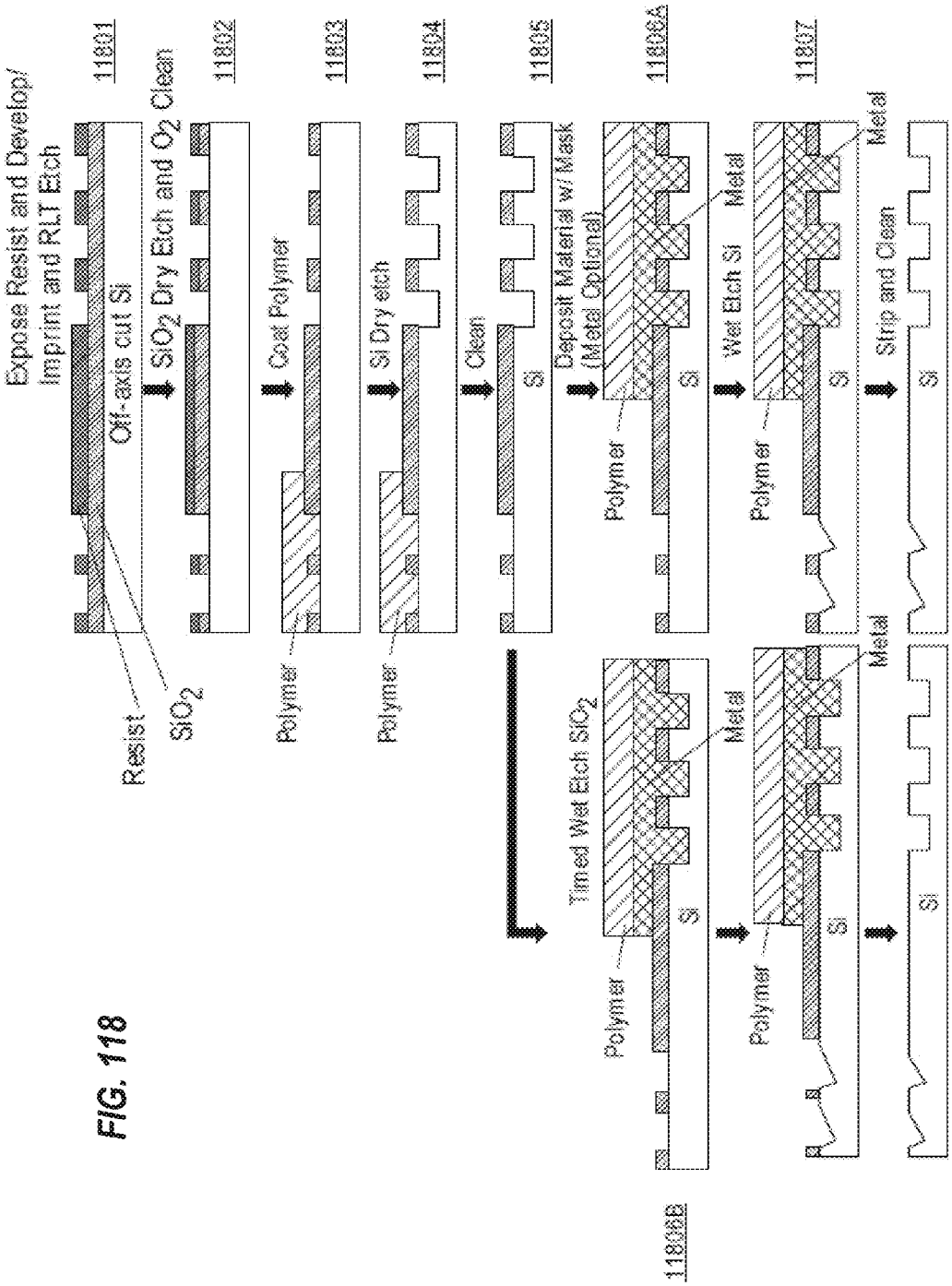
Expose Resist and Develop/
Imprint and RLT Etch
11801
Off-axis cut Si
Resist
SiO_2
SiO_2 Dry Etch and O_2 Clean
11802
Coat Polymer
Polymer
11803
Si Dry etch
Polymer
11804
Clean
Si
11805
Deposit Material w/ Mask
(Metal Optional)
Polymer
Si
11806A
Wet Etch Si
Metal
Polymer
Si
Metal
11807
Strip and Clean
Si
Timed Wet Etch SiO_2
Metal
Polymer
Si
Polymer
Si
Metal
Si
11806B

FIG. 118

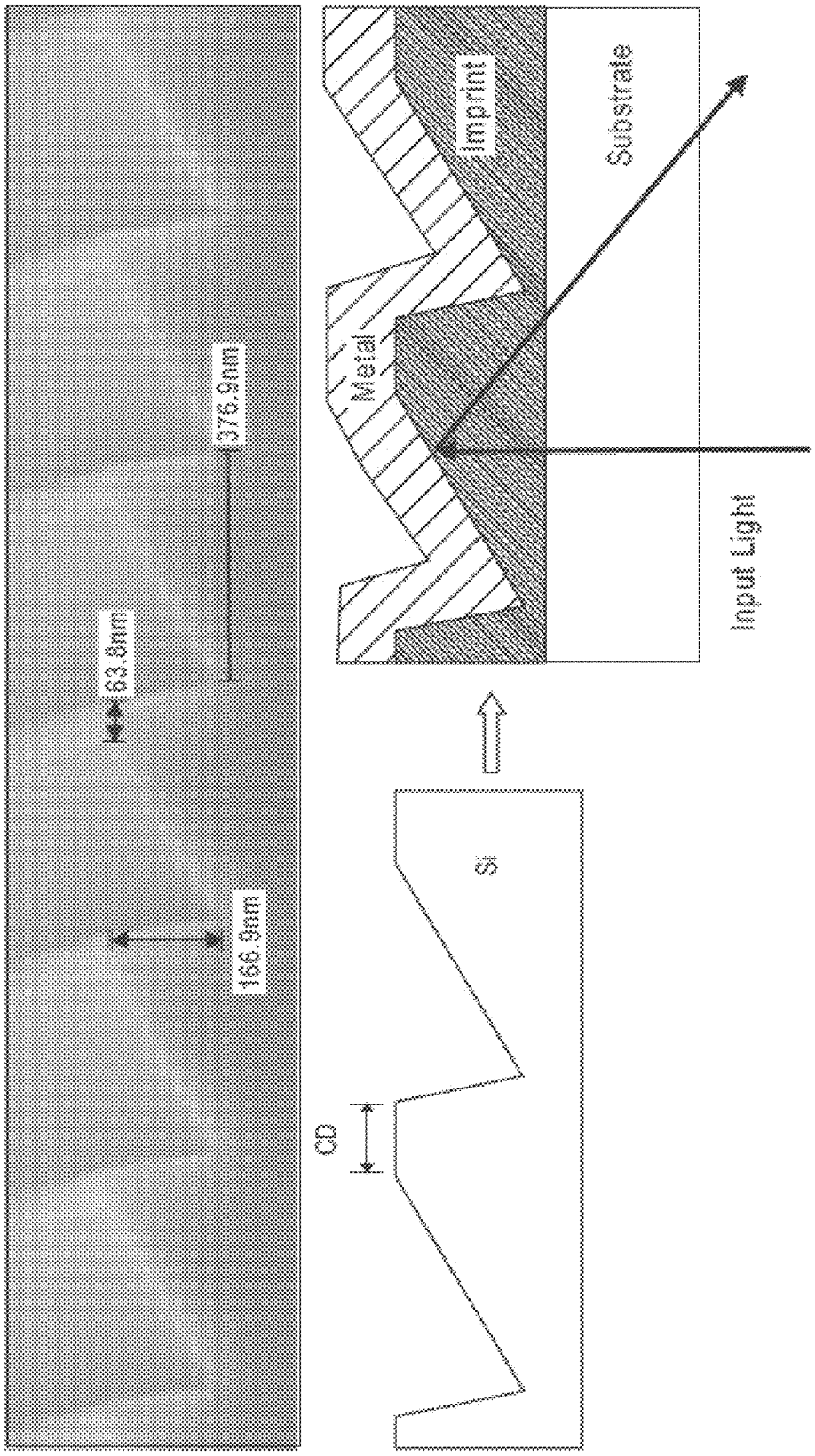
63.8nm
376.9nm
166.9nm
CD
Si
Metal
Imprint
Substrate
Input Light

FIG. 119A

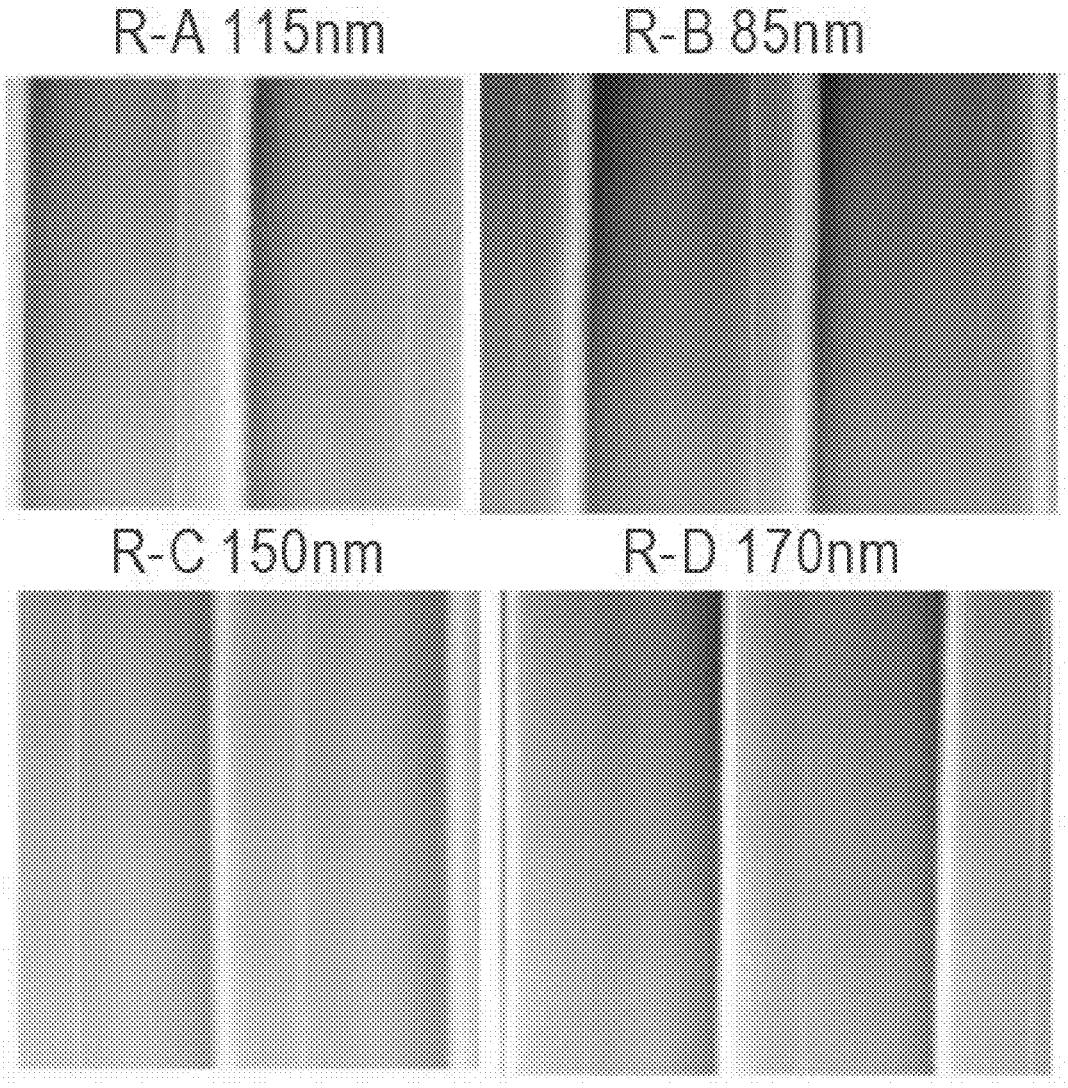

FIG. 119B

Sample	Pitch (nm)	CD Top (nm)	Efficiency % at 0 Deg
G-A	380	61	46.6
G-B	380	38	32
G-C	380	68	45.9
G-D	380	33	38
G-E	380	80	51
R-A	430	115	52.4
R-B	430	85	51.3
R-C	430	150	50.8
R-D	430	170	47

FIG. 119C

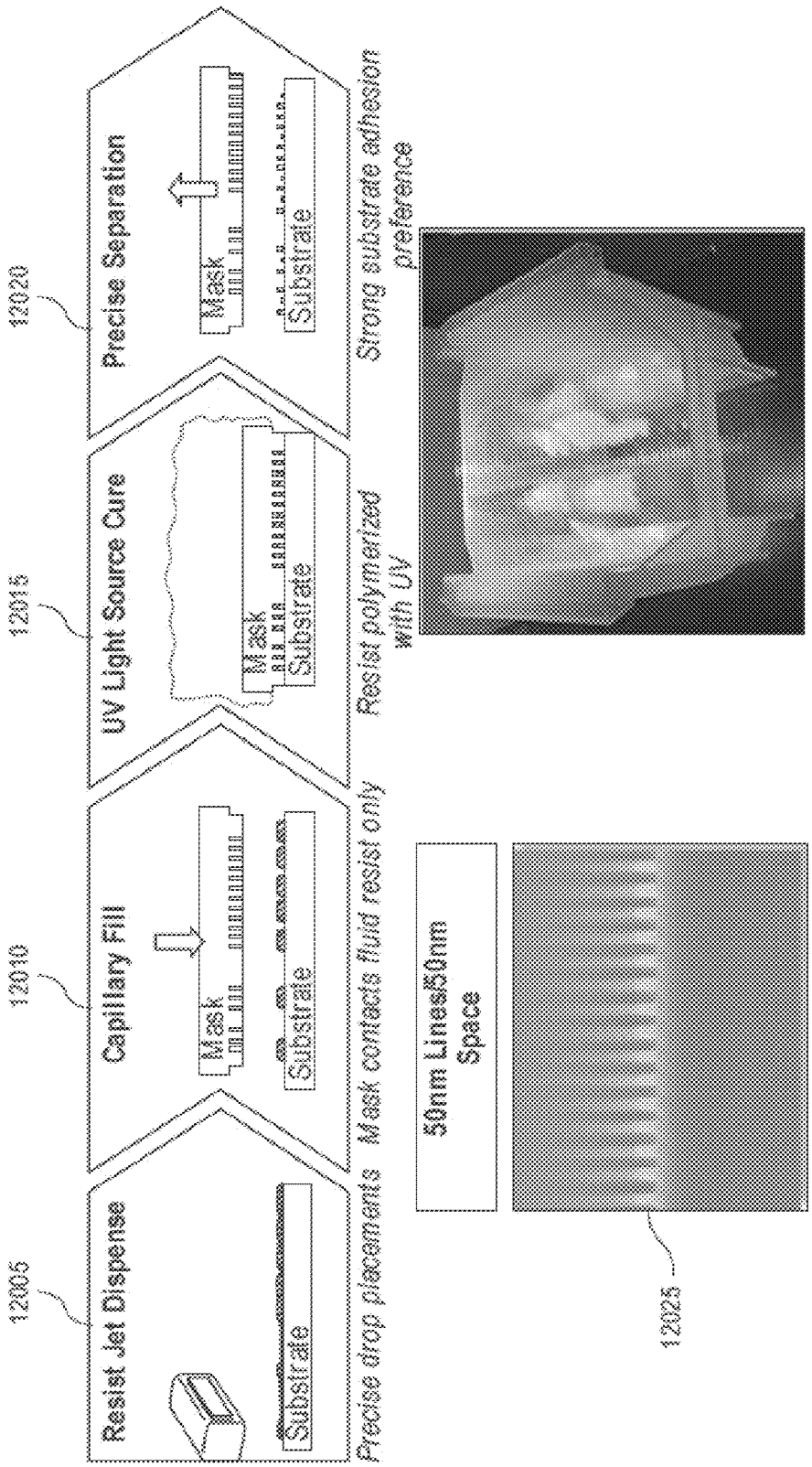
12005
Resist Jet Dispense
Substrate
Precise drop placements
12010
Capillary Fill
Mask
Substrate
Mask contacts fluid resist only
12015
UV Light Source Cure
Mask
Substrate
Resist polymerized with UV
12020
Precise Separation
Mask
Substrate
Strong substrate adhesion preference
50nm Lines/50nm Space
12025

FIG. 120

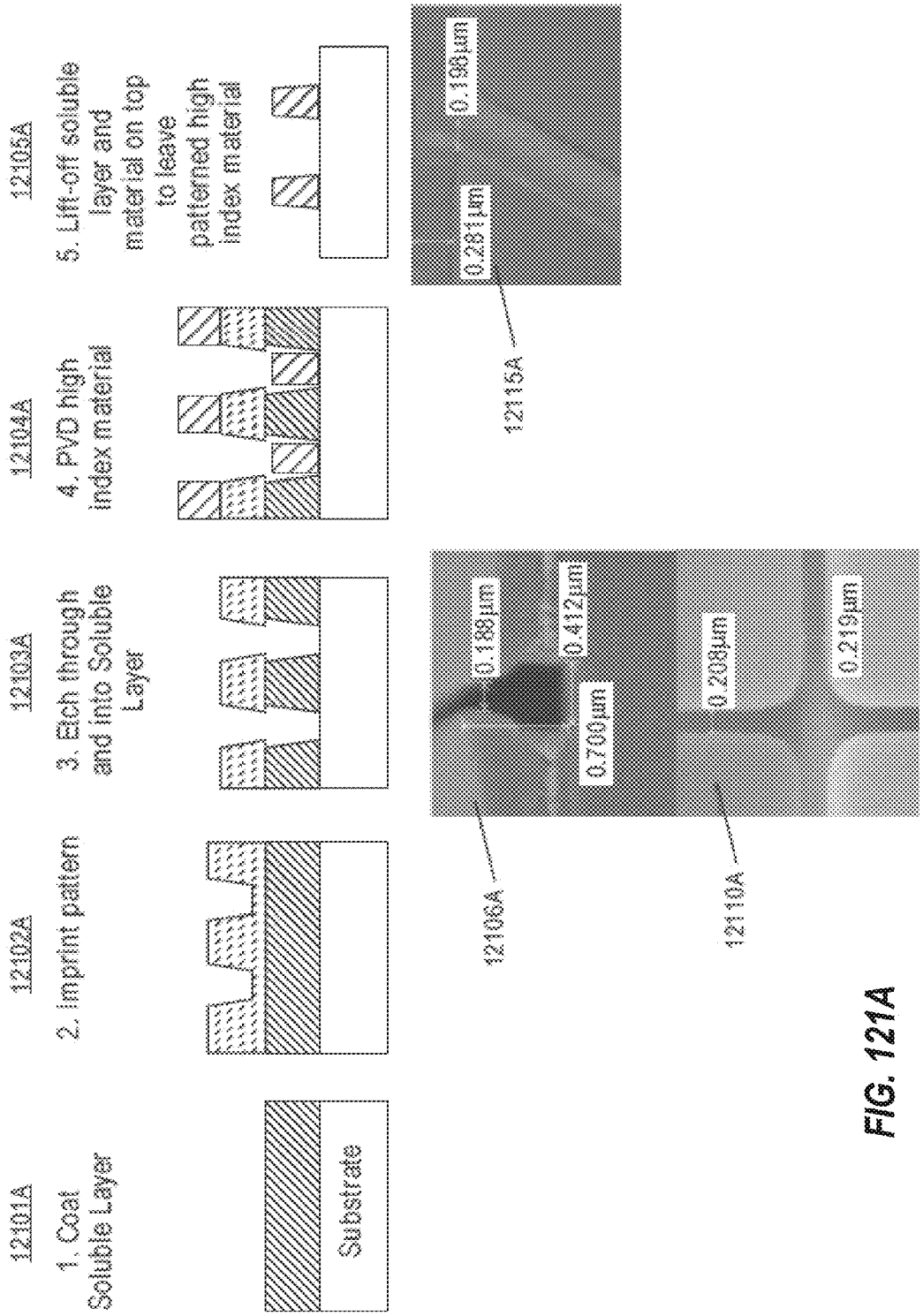
12101A
1. Coat Soluble Layer
Substrate
12102A
2. Imprint pattern
12103A
3. Etch through and into Soluble Layer
12104A
4. PVD high index material
12105A
5. Lift-off soluble layer and material on top to leave patterned high index material
0.188µm
0.412µm
0.700µm
0.208µm
0.219µm
12106A
12110A
0.198µm
0.281µm
12115A

FIG. 121A

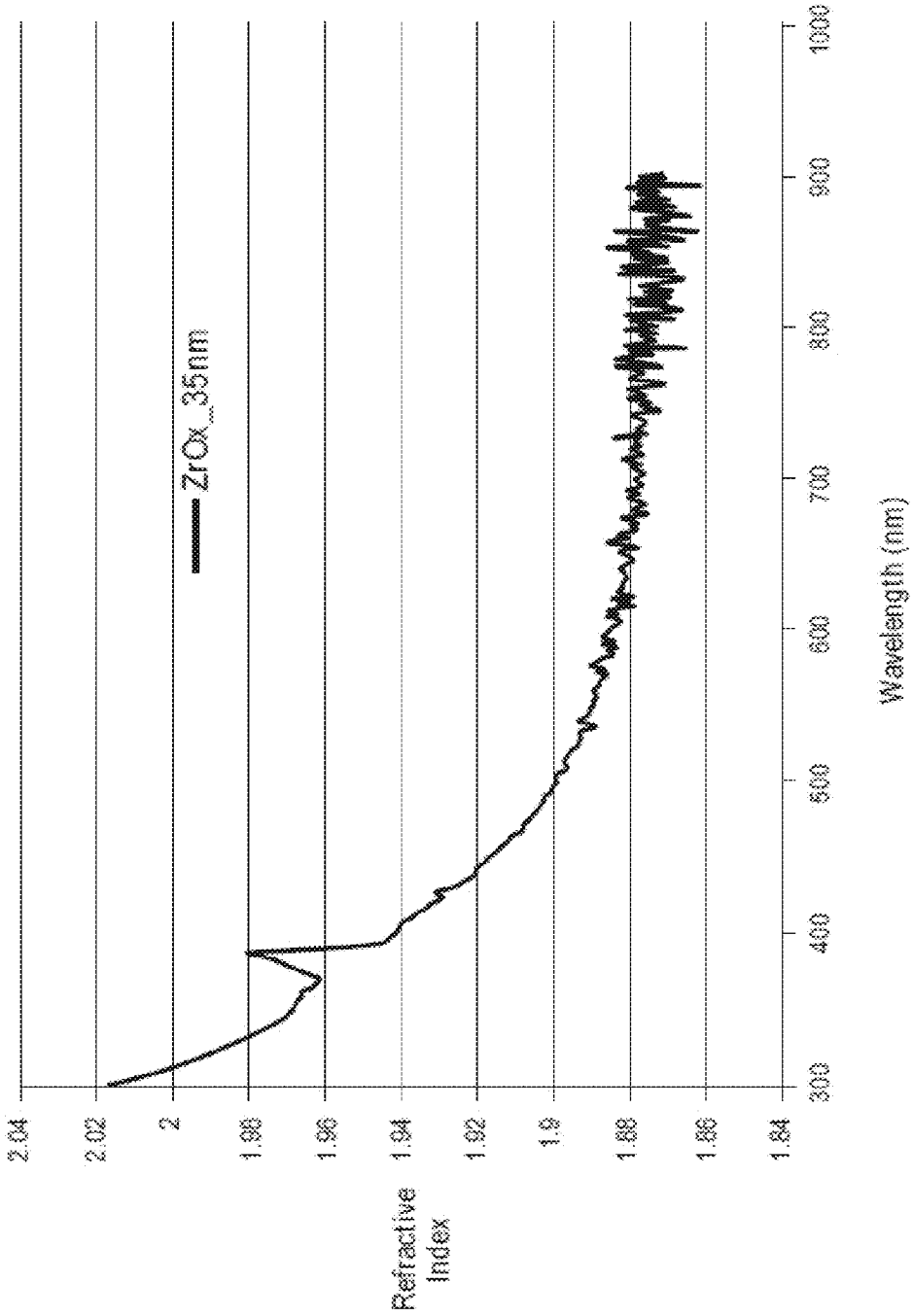
ZrOx_35nm
Refractive Index
2.04
2.02
2
1.98
1.96
1.94
1.92
1.9
1.88
1.86
1.84
300
400
500
600
700
800
900
1000
Wavelength (nm)

FIG. 121B

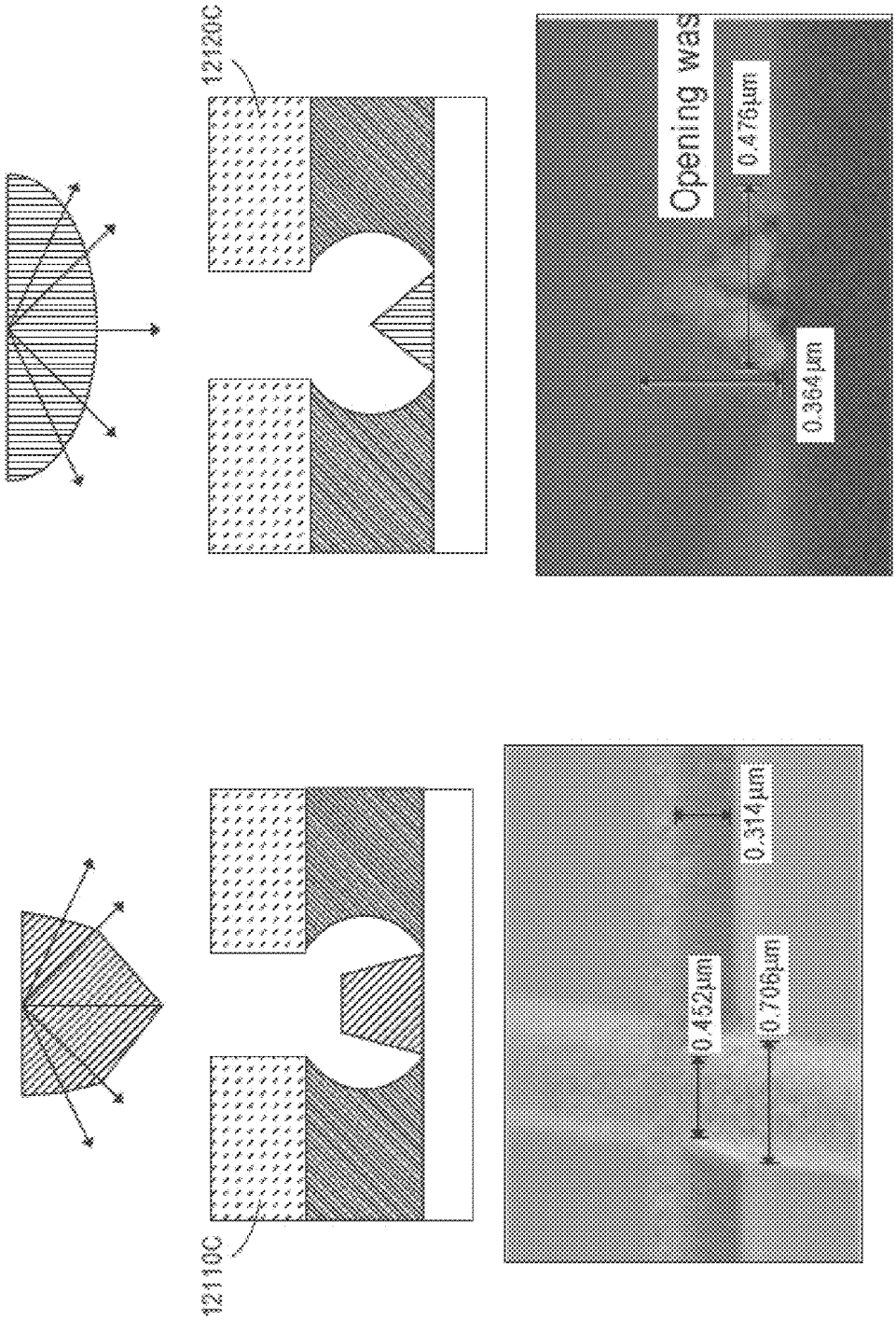
12120C
Opening was
0.476μm
0.384μm
12110C
0.314μm
0.452μm
0.705μm

FIG. 121C

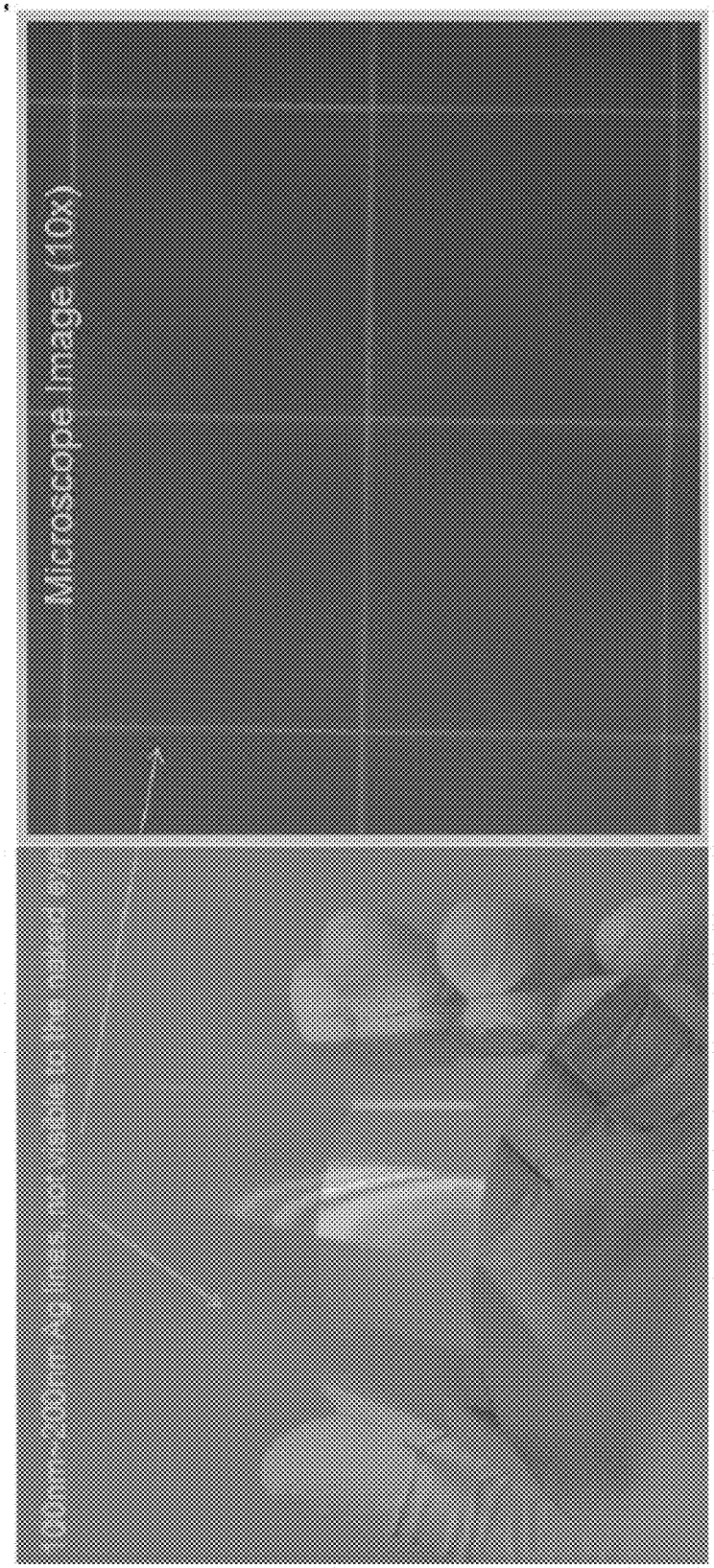

FIG. 121D

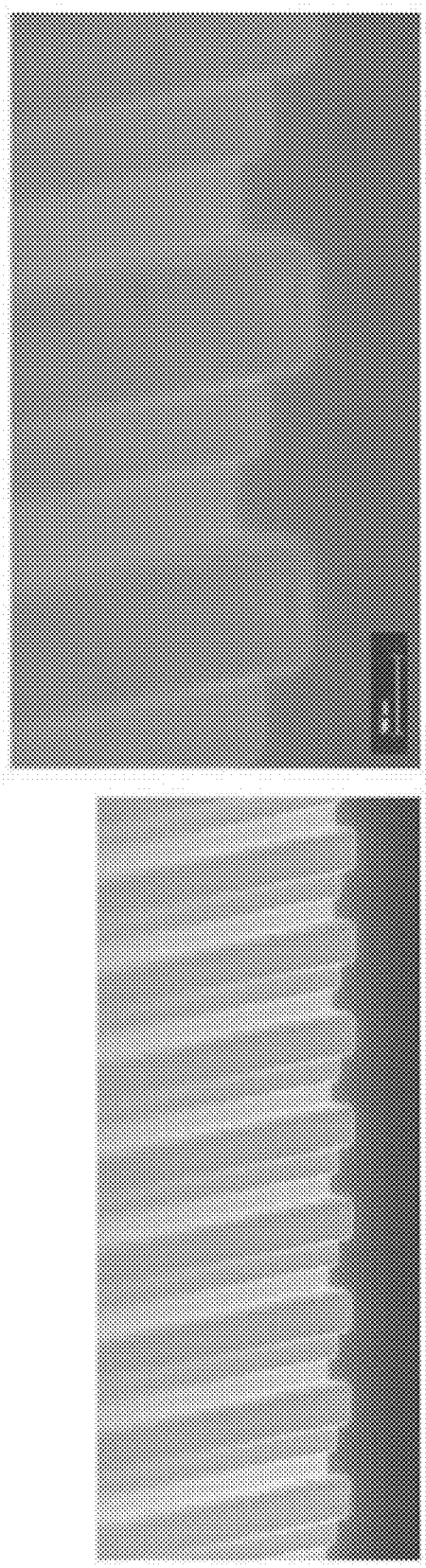

FIG. 122

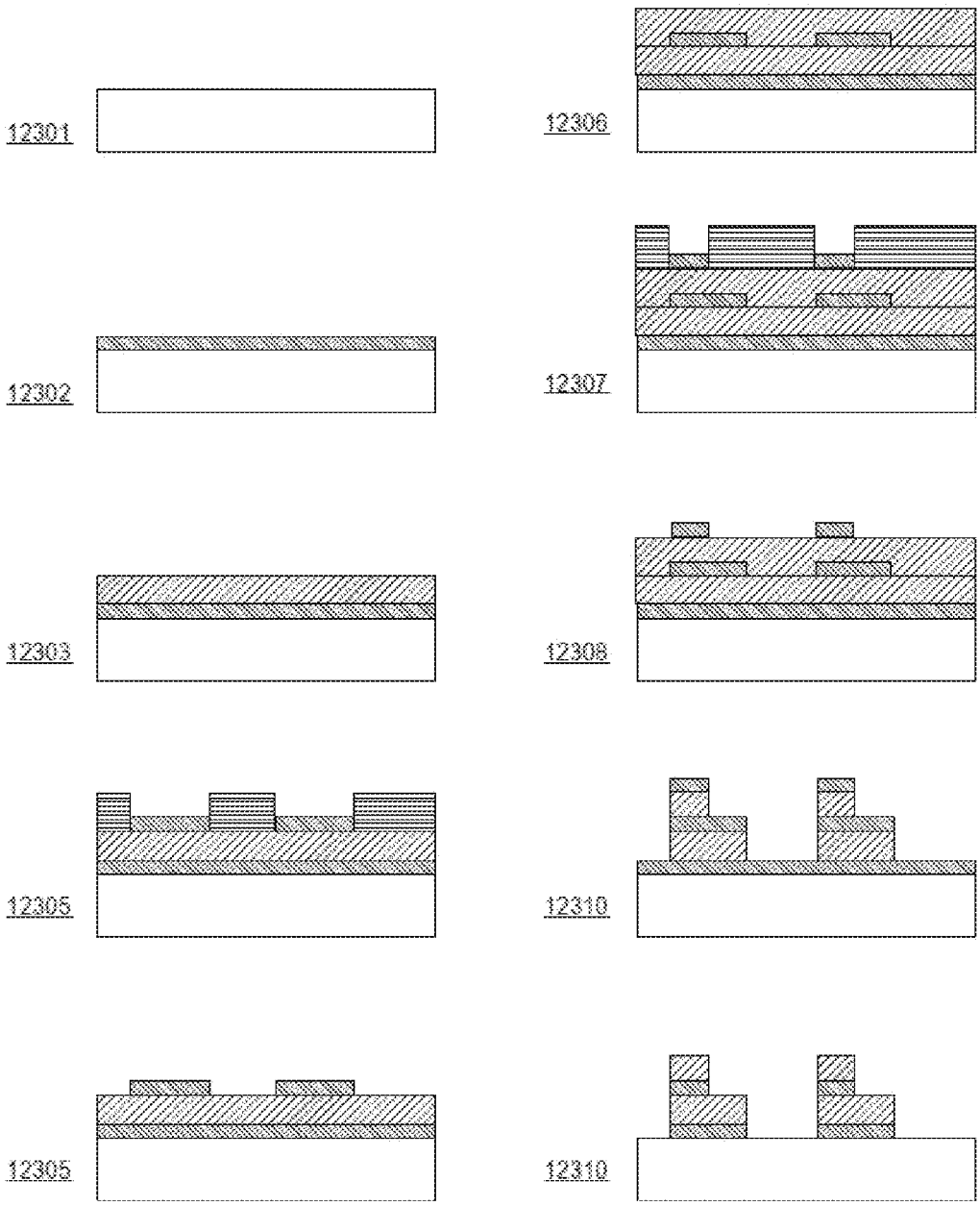
12301
12302
12303
12305
12305
12306
12307
12308
12310
12310

FIG. 123

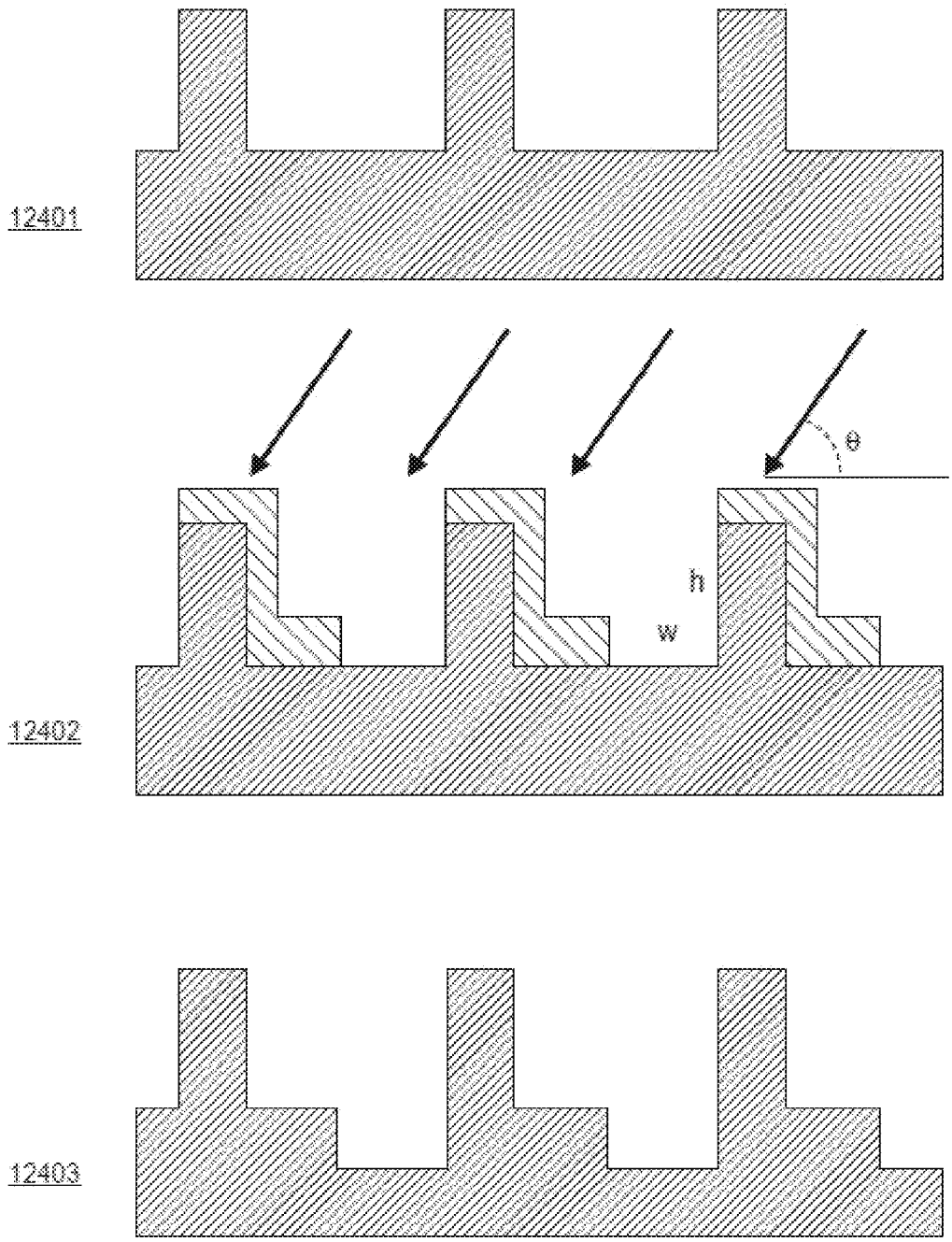

FIG. 124

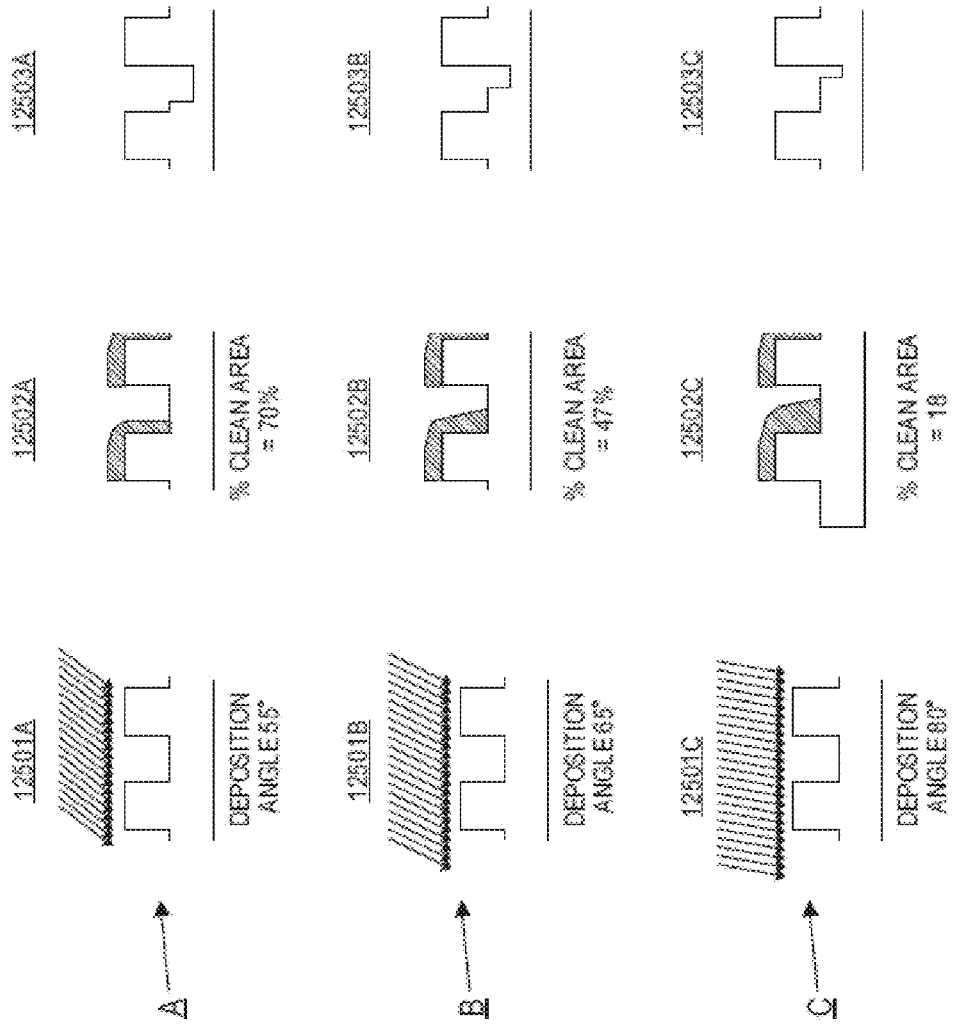
12501A
12502A
12503A
DEPOSITION ANGLE 55°
% CLEAN AREA = 70%
A
12501B
12502B
12503B
DEPOSITION ANGLE 65°
% CLEAN AREA = 47%
B
12501C
12502C
12503C
DEPOSITION ANGLE 80°
% CLEAN AREA = 18
C

FIG. 125

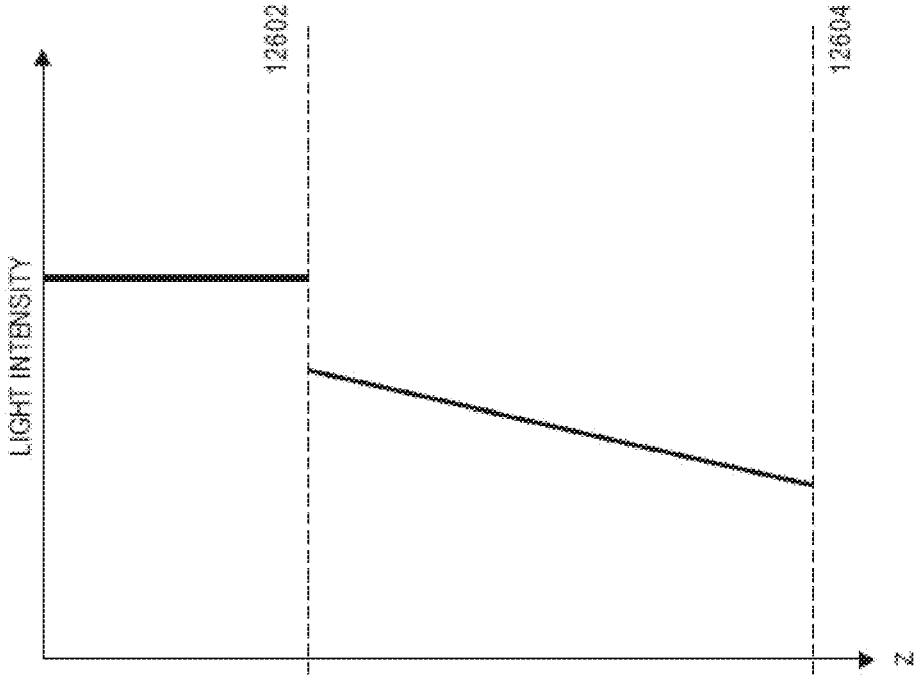

FIG. 126B

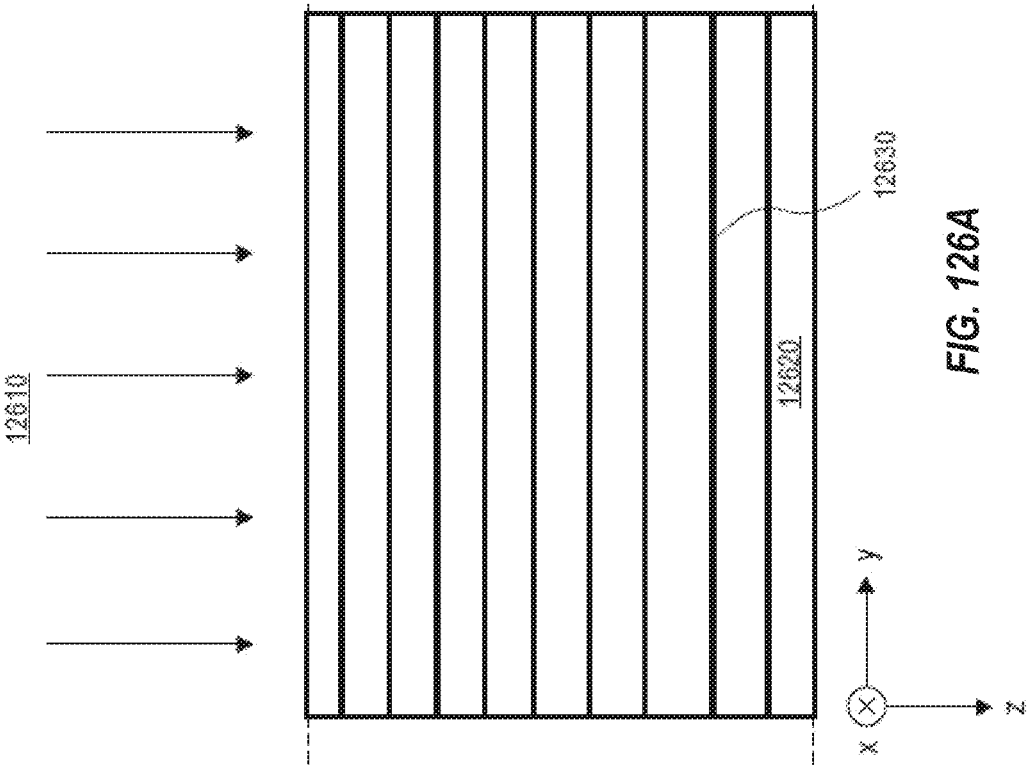

FIG. 126A

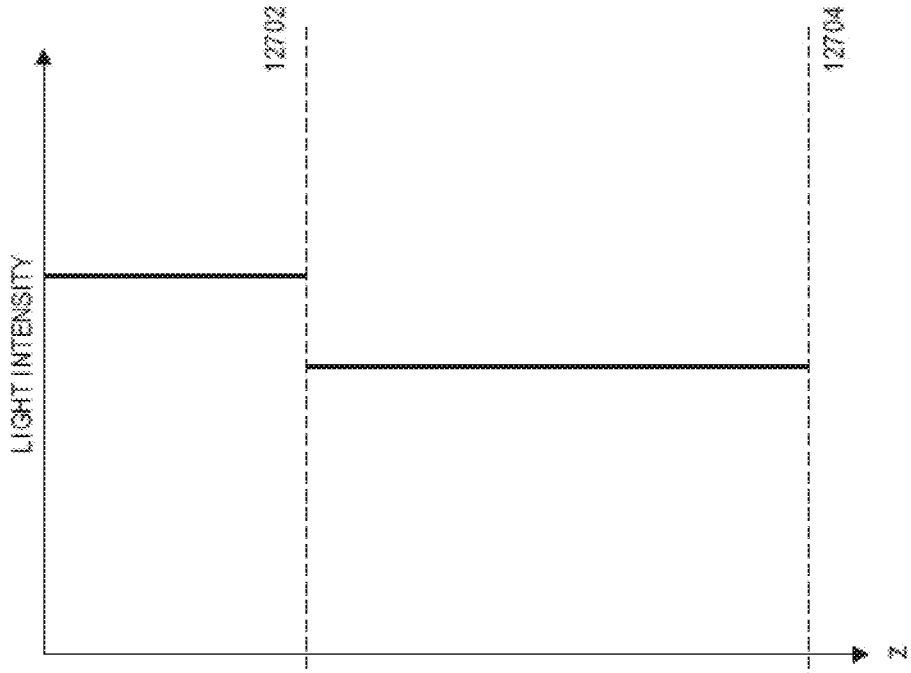

FIG. 127B

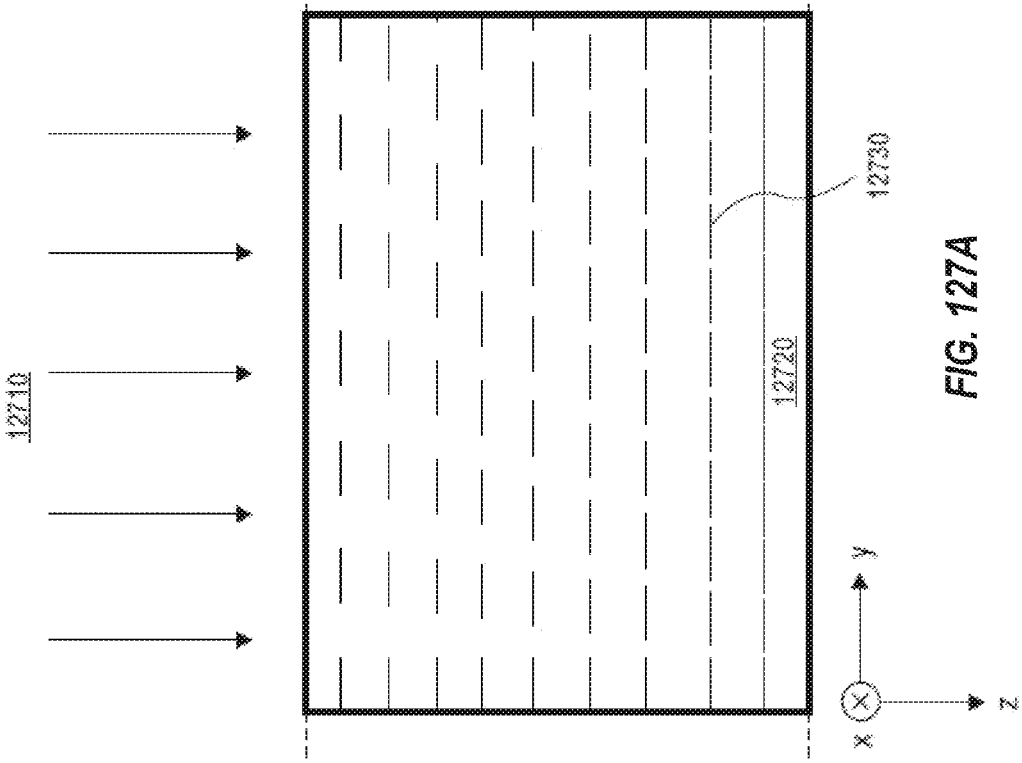

FIG. 127A

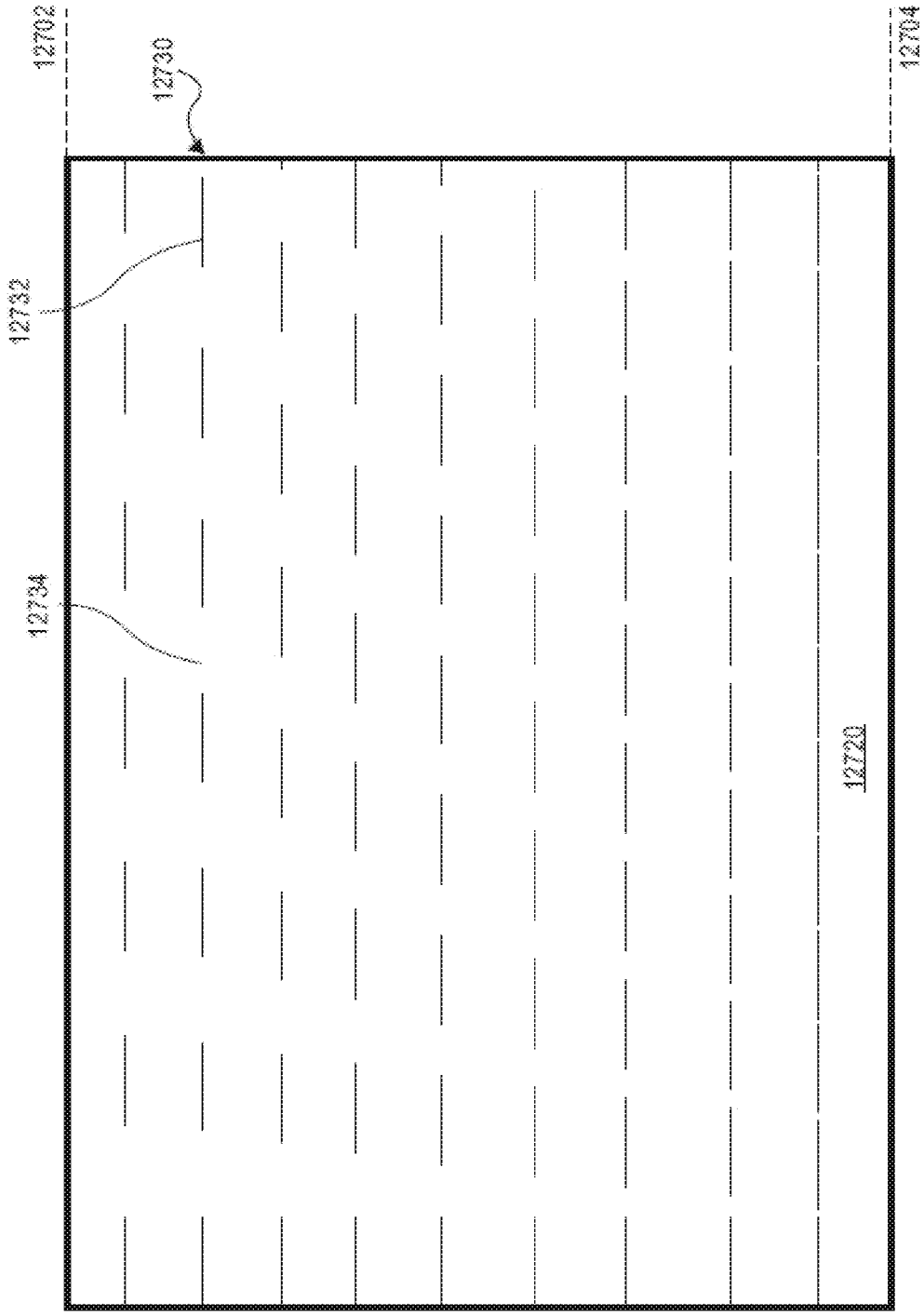

FIG. 127C

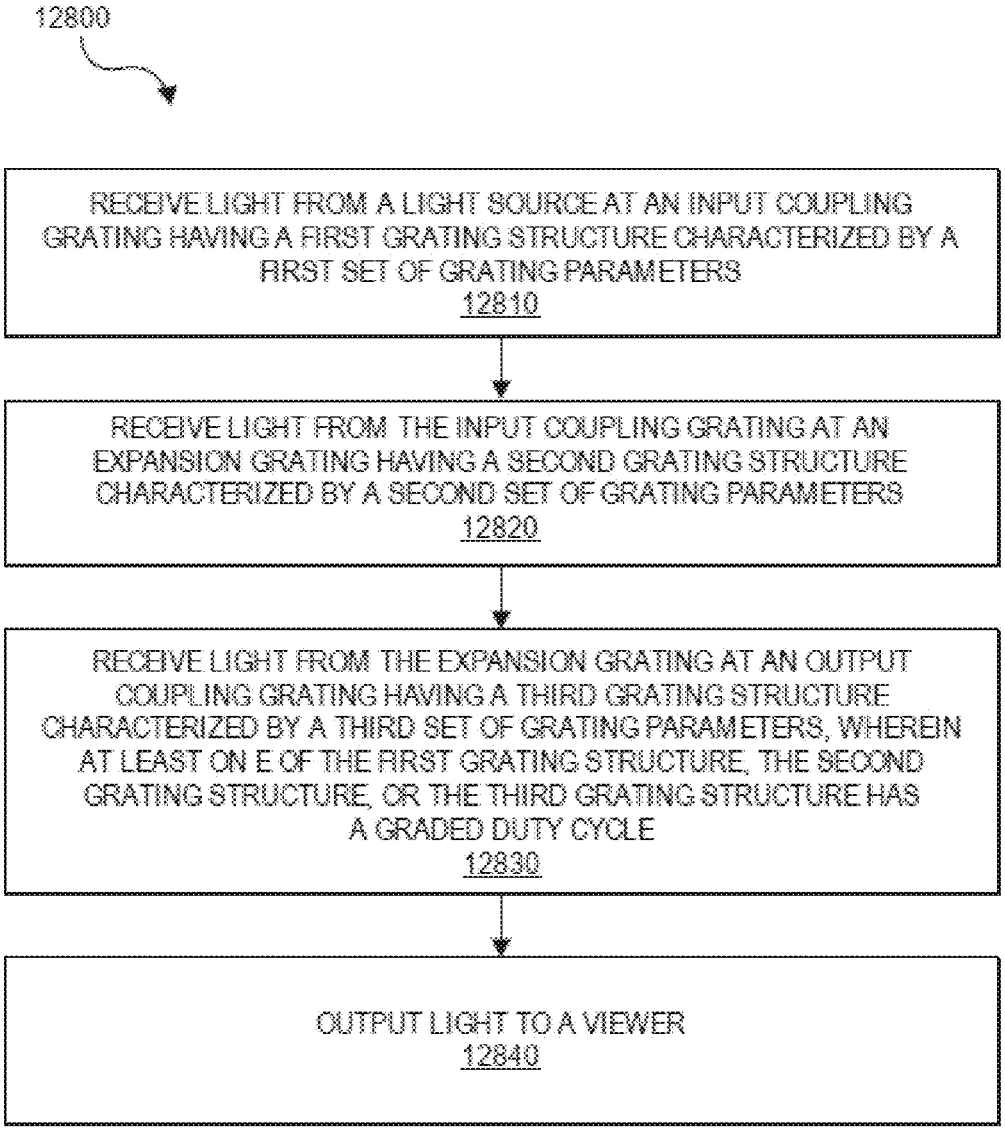
12800
RECEIVE LIGHT FROM A LIGHT SOURCE AT AN INPUT COUPLING GRATING HAVING A FIRST GRATING STRUCTURE CHARACTERIZED BY A FIRST SET OF GRATING PARAMETERS
12810
RECEIVE LIGHT FROM THE INPUT COUPLING GRATING AT AN EXPANSION GRATING HAVING A SECOND GRATING STRUCTURE CHARACTERIZED BY A SECOND SET OF GRATING PARAMETERS
12820
RECEIVE LIGHT FROM THE EXPANSION GRATING AT AN OUTPUT COUPLING GRATING HAVING A THIRD GRATING STRUCTURE CHARACTERIZED BY A THIRD SET OF GRATING PARAMETERS, WHEREIN AT LEAST ON E OF THE FIRST GRATING STRUCTURE, THE SECOND GRATING STRUCTURE, OR THE THIRD GRATING STRUCTURE HAS A GRADED DUTY CYCLE
12830
OUTPUT LIGHT TO A VIEWER
12840

FIG. 128

MULTI-LAYER DIFFRACTIVE EYEPIECE

CROSS-REFERENCES TO RELATED APPLICATIONS

[0001] This application claims priority to U.S. Provisional Patent Application No. 62/377,831, filed on Aug. 22, 2016; U.S. Provisional Patent Application No. 62/447,608, filed on Jan. 18, 2017; U.S. Provisional Patent Application No. 62/449,524, filed Jan. 23, 2017; U.S. Provisional Patent Application No. 62/509,969, filed on May 23, 2017; U.S. Provisional Patent Application No. 62/519,536, filed on Jun. 14, 2017; and U.S. Provisional Patent Application No. 62/521,889, filed on Jun. 19, 2017, the disclosures of which are hereby incorporated by reference in their entirety for all purposes.

BACKGROUND OF THE INVENTION

[0002] Modern computing and display technologies have facilitated the development of systems for so called "virtual reality" or "augmented reality" experiences, wherein digitally reproduced images or portions thereof are presented to a user in a manner wherein they seem to be, or may be perceived as, real. A virtual reality, or "VR," scenario typically involves presentation of digital or virtual image information without transparency to other actual real-world visual input; an augmented reality, or "AR," scenario typically involves presentation of digital or virtual image information as an augmentation to visualization of the actual world around the user.

[0003] Despite the progress made in these display technologies, there is a need in the art for improved methods and systems related to augmented reality systems, particularly, display systems.

SUMMARY OF THE INVENTION

[0004] The present disclosure relates to virtual reality and augmented reality imaging and visualization systems. The present disclosure relates generally to methods and systems related to projection display systems including wearable displays. More particularly, embodiments of the present disclosure provide methods and systems for reducing optical artifacts in projection display systems. The disclosure is applicable to a variety of applications in computer vision and image display systems.

[0005] According to some embodiments, an optical device includes the following: a frame defining a pair of eye openings and including a pair of arms configured to extend over the ears of a user of the optical device; a temperature monitoring system configured to monitor a distribution of heat within the frame; a display assembly configured to display content to a user of the optical device; and a processor configured to receive temperature data from the temperature monitoring system and to adjust an output of the display assembly based on variation in the distribution of heat within the frame.

[0006] According to some embodiments, an optical device includes the following: a frame assembly including a pair of arms configured to extend over the ears of a user of the optical device and defining and defining a first eye opening and a second eye opening; first and second projectors coupled to the frame assembly; diffractive optics configured to receive light emitted by the first and second projectors and orient the light toward the eyes of the user; and a processor configured to shift content projected by the first and second projectors in accordance with a thermal profile of the optical device.

[0007] According to some embodiments, an optical device includes the following: a frame assembly, which includes a pair of arms joined together by a front band, the pair of arms being configured to contact the ears of a user of the optical device, and a heat distribution system for directing heat generated by the optical device to heat dissipation regions of the optical device; electronic devices in thermal contact with the frame assembly by way of the heat distribution system, the heat distribution system being configured to distribute heat emitted by the plurality of electronic devices to the pair of arms and to the front band; a display assembly; and a processor configured to adjust operation of the display assembly in accordance with temperature changes of the plurality of electronic devices.

[0008] According to an embodiment of the present invention, an artifact mitigation system is provided. The artifact mitigation system includes a projector assembly, a set of imaging optics optically coupled to the projector assembly, and an eyepiece optically coupled to the set of imaging optics. The eyepiece includes an incoupling interface. The artifact mitigation system also includes an artifact prevention element disposed between the set of imaging optics and the eyepiece. The artifact prevention element includes a linear polarizer, a first quarter waveplate disposed adjacent the linear polarizer, and a color select component disposed adjacent the first quarter waveplate.

[0009] According to another embodiment of the present invention, an artifact mitigation system is provided. The artifact mitigation system includes a projector assembly, a set of imaging optics optically coupled to the projector assembly, and an eyepiece optically coupled to the set of imaging optics. The eyepiece includes an incoupling region having a first set of incoupling diffractive elements and a second set of incoupling diffractive elements. The artifact mitigation system further includes a set of color filters disposed between the set of imaging optics and the eyepiece. The set of color filters includes a first filter disposed adjacent the first set of incoupling diffractive elements and a second filter disposed adjacent the second set of incoupling diffractive elements.

[0010] According to a specific embodiment of the present invention, a projector assembly is provided. The projector assembly includes a polarization beam splitter (PBS), a set of spatially displaced light sources disposed adjacent the PBS, and a collimator disposed adjacent the PBS. The set of spatially displaced light sources can include a set of three LEDs having different colors. In some embodiments, the set of spatially displaced light sources are adjacent a first side of the PBS. The collimator can be adjacent a second side of the PBS adjacent the first side.

[0011] The projector assembly also includes a display panel (e.g., an LCOS panel) disposed adjacent the PBS, a circular polarizer disposed adjacent the PBS, and a set of imaging optics disposed adjacent the PBS. The circular polarizer can be disposed between the PBS and the set of imaging optics. The display panel can be disposed adjacent a third side of the PBS, wherein the third side is adjacent the first side and opposite to the second side. Furthermore, the set of imaging optics can be disposed adjacent a fourth side of the PBS, wherein the fourth side is opposite to the first side.

[0012] In an embodiment, the set of imaging optics form an image of the display panel at an incoupling interface. In this embodiment, the projector assembly includes an eyepiece positioned at the incoupling interface. Each of the light sources of the set of spatially displaced light sources can be imaged at a separate portion of the incoupling interface. The eyepiece can include a plurality of waveguide layers.

[0013] Some embodiments of the present invention provide methods and systems for projecting images to a user's eye using one or more waveguides layered together in an eyepiece. The waveguides may include one or gratings and/or diffractive elements disposed within or on one or more surfaces of the waveguides.

[0014] In some embodiments, a waveguide for viewing a projected image is provided. The waveguide may include a substrate for guiding light. The waveguide may also include an incoupling diffractive element disposed within or on the substrate and configured to diffract an incoupled light related to the projected image into the substrate. The waveguide may further include a first grating disposed within or on the substrate and configured to manipulate the diffracted incoupled light from the incoupling diffractive element so as to multiply the projected image and to direct the multiplied projected image to a second grating. In some embodiments, the waveguide includes the second grating disposed within or on the substrate and configured to outcouple the manipulated diffracted incoupled light from the waveguide. In some embodiments, the first grating and the second grating occupy a same region of the waveguide.

[0015] In some embodiments, the first grating and the second grating are disposed on or within a same side of the substrate such that the first grating and the second grating are superimposed onto each other. In some embodiments, the first grating and the second grating are disposed on or within different sides of the substrate. In some embodiments, the waveguide may include a third grating disposed within or on the substrate and configured to manipulate the diffracted incoupled light from the incoupling diffractive element so as to multiply the projected image and to direct the multiplied projected image to the second grating. In some embodiments, the first grating is configured to direct the multiplied projected image to the second grating in a first direction. In some embodiments, the third grating is configured to direct the multiplied projected image to the second grating in a second direction, the second direction being opposite the first direction. In some embodiments, the first grating, the second grating, and the third grating are disposed on or within a same side of the substrate such that the first grating, the second grating, and the third grating are superimposed onto each other. In some embodiments, the first grating and the third grating are disposed on or within a same side of the substrate such that the first grating and the third grating are superimposed onto each other. In some embodiments, the second grating is disposed on or within an opposite side of the substrate.

[0016] In some embodiments, an eyepiece for viewing a projected image is provided. The eyepiece may include a plurality of waveguides coupled together in a layered arrangement. In some embodiments, each waveguide of the plurality of waveguides includes a substrate, an incoupling diffractive element, a first grating, and a second grating.

[0017] In some embodiments, a waveguide for viewing a projected image is provided. The waveguide may include a substrate for guiding light. The waveguide may also include an incoupling diffractive element disposed within or on the substrate and configured to diffract an incoupled light related to the projected image into the substrate in at least a first direction and a second direction. The waveguide may further include a first grating disposed within or on the substrate and configured to manipulate the diffracted incoupled light in the first direction so as to multiply the projected image and to direct a first multiplied projected image to a third grating. In some embodiments, the waveguide includes a second grating disposed within or on the substrate and configured to manipulate the diffracted incoupled light in the second direction so as to multiply the projected image and to direct a second multiplied projected image to the third grating. In some embodiments, the third grating is disposed within or on the substrate and is configured to outcouple at least a portion of the first multiplied projected image from the waveguide and to outcouple at least a portion of the second multiplied projected image from the waveguide.

[0018] In some embodiments, the incoupling diffractive element is configured to diffract the incoupled light related to the projected image into the substrate in a third direction. In some embodiments, the third grating is configured to outcouple at least a portion of the diffracted incoupled light in the third direction from the waveguide. In some embodiments, the first direction is substantially opposite the second direction. In some embodiments, the third direction is substantially orthogonal to the first direction and the second direction. In some embodiments, the incoupling diffractive element comprises two superimposed diffraction gratings that are orthogonal to each other. In some embodiments, the first direction forms a 120 degree angle with the second direction. In some embodiments, the third direction forms a 60 degree angle with each of the first direction and the second direction. In some embodiments, the incoupling diffractive element comprises a plurality of islands laid out in a hexagonal grid. In some embodiments, a plurality of the waveguides may be coupled together in a layered arrangement.

[0019] Some embodiments include a plurality of waveguides coupled together in a layered arrangement, wherein each waveguide of the plurality of waveguides includes a substrate for guiding light, an incoupling diffractive element disposed within or on the substrate and configured to diffract an incoupled light related to the projected image into the substrate, a first grating disposed within or on the substrate and configured to manipulate the diffracted incoupled light from the incoupling diffractive element so as to multiply the projected image and to direct the multiplied projected image to a second grating, and the second grating disposed within or on the substrate configured to outcouple the manipulated diffracted incoupled light from the waveguide.

[0020] According to an embodiment of the present invention, an eyepiece for projecting an image to an eye of a viewer is provided. The eyepiece includes a planar waveguide having a front surface and a back surface, the planar waveguide is configured to propagate light in a first wavelength range. The eyepiece also includes a grating coupled to the back surface of the waveguide and configured to diffract a first portion of the light propagating in the waveguide out of a plane of the waveguide toward a first direction and to diffract a second portion of the light propagating in the waveguide out of the plane of the waveguide toward a second direction opposite to the first direction. The eyepiece further includes a wavelength-selective reflector coupled to

the front surface of the waveguide and configured to reflect light in the first wavelength range and transmit light outside the first wavelength range, such that the wavelength-selective reflector reflects at least part of the second portion of the light back toward the first direction.

[0021] According to another embodiment of the present invention, an eyepiece for projecting an image to an eye of a viewer is provided. The eyepiece includes a first planar waveguide having a first front surface and a first back surface and a second planar waveguide disposed substantially parallel to and in front of the first planar waveguide. The first planar waveguide is configured to propagate first light in a first wavelength range. The second planar waveguide has a second front surface and a second back surface and is configured to propagate second light in a second wavelength range. The eyepiece also includes a third planar waveguide disposed substantially parallel to and in front of the second planar waveguide. The third planar waveguide has a third front surface and a third back surface and is configured to propagate third light in a third wavelength range. The eyepiece further includes a first grating coupled to the first back surface of the first planar waveguide and configured to diffract a first portion of the first light propagating in the first planar waveguide out of a plane of the first planar waveguide toward a first direction and to diffract a second portion of the first light out of the plane of the first planar waveguide toward a second direction opposite to the first direction. The eyepiece additionally includes a second grating coupled to the second back surface of the second planar waveguide and configured to diffract a first portion of the second light propagating in the second planar waveguide out of a plane of the second planar waveguide toward the first direction and to diffract a second portion of the second light out of the plane of the second planar waveguide toward the second direction. The eyepiece also includes a third grating coupled to the third back surface of the third planar waveguide and configured to diffract a first portion of the third light propagating in the third planar waveguide out of a plane of the third planar waveguide toward the first direction and to diffract a second portion of the third light out of the plane of the third planar waveguide toward the second direction.

[0022] The eyepiece includes a first wavelength-selective reflector coupled to the first front surface of the first planar waveguide and configured to reflect light in the first wavelength range and transmit light outside the first wavelength range, such that the first wavelength-selective reflector reflects at least part of the second portion of the first light back toward the first direction. The eyepiece also includes a second wavelength-selective reflector coupled to the second front surface of the second planar waveguide and configured to reflect light in the second wavelength range and transmit light outside the second wavelength range, such that the second wavelength-selective reflector reflects at least part of the second portion of the second light back toward the first direction. The eyepiece further includes a third wavelength-selective reflector coupled to the third front surface of the third planar waveguide and configured to reflect light in the third wavelength range and transmit light outside the third wavelength range, such that the third wavelength-selective reflector reflects at least part of the second portion of the third light back toward the first direction.

[0023] According to a specific embodiment of the present invention, an eyepiece for projecting an image to an eye of a viewer is provided. The eyepiece includes a first planar waveguide having a first front surface and a first back surface and configured to propagate first light in a first wavelength range. The eyepiece also includes a second planar waveguide disposed substantially parallel to and in front of the first planar waveguide. The second planar waveguide has a second front surface and a second back surface and is configured to propagate second light in a second wavelength range. The eyepiece further includes a third planar waveguide disposed substantially parallel to and in front of the second planar waveguide. The third planar waveguide has a third front surface and a third back surface and is configured to propagate third light in a third wavelength range.

[0024] Additionally, the eyepiece includes a first grating coupled to the first front surface of the first planar waveguide and configured to diffract a first portion of the first light propagating in the first planar waveguide out of a plane of the first planar waveguide toward a first direction and to diffract a second portion of the first light out of the plane of the first planar waveguide toward a second direction opposite to the first direction. The eyepiece also includes a second grating coupled to the second front surface of the second planar waveguide and configured to diffract a first portion of the second light propagating in the second planar waveguide out of a plane of the second planar waveguide toward the first direction and to diffract a second portion of the second light out of the plane of the second planar waveguide toward the second direction. The eyepiece further includes a third grating coupled to the third front surface of the third waveguide and configured to diffract a first portion of the third light propagating in the third planar waveguide out of a plane of the third planar waveguide toward the first direction and to diffract a second portion of the third light out of the plane of the third planar waveguide toward the second direction.

[0025] Moreover, the eyepiece includes a first wavelength-selective reflector coupled to the second back surface of the second planar waveguide and configured to reflect light in the first wavelength range and transmit light outside the first wavelength range, such that the first wavelength-selective reflector reflects at least part of the second portion of the first light back toward the first direction. The eyepiece also includes a second wavelength-selective reflector coupled to the third back surface of the third planar waveguide and configured to reflect light in the second wavelength range and transmit light outside the second wavelength range, such that the second wavelength-selective reflector reflects at least part of the second portion of the second light back toward the first direction. The eyepiece further includes a front cover plate disposed substantially parallel to and in front of the third planar waveguide and a third wavelength-selective reflector coupled to a surface of the front cover plate. The third planar waveguide is configured to reflect light in the third wavelength range and transmit light outside the third wavelength range, such that the third wavelength-selective reflector reflects at least part of the second portion of the third light back toward the first direction.

[0026] Some embodiments of the present disclosure provide methods and systems for improving quality and uniformity in projection display systems.

[0027] According to some embodiments, a method of manufacturing a waveguide having a combination of a

binary grating structure and a blazed grating structure is provided. The method comprises cutting a substrate off-axis. The method further comprises depositing a first layer on the substrate. The method further comprises depositing a resist layer on the first layer, wherein the resist layer includes a pattern. The method further comprises etching the first layer in the pattern using the resist layer as a mask, wherein the pattern includes a first region and a second region. The method further comprises removing the resist layer. The method further comprises coating a first polymer layer in the first region of the pattern. The method further comprises etching the substrate in the second region of the pattern, creating the binary grating structure in the substrate in the second region. The method further comprises removing the first polymer layer. The method further comprises coating a second polymer layer in the second region of the pattern. The method further comprises etching the substrate in the first region of the pattern, creating the blazed grating structure in the substrate in the first region. The method further comprises removing the second polymer layer. The method further comprises removing the first layer from the substrate.

[0028] According to some embodiments, a method of manufacturing a waveguide having a multi-level binary grating structure is provided. The method comprises coating a first etch stop layer on a first substrate. The method further comprises adding a second substrate on the first etch stop layer. The method further comprises depositing a first resist layer on the second substrate, wherein the first resist layer includes at least one first opening. The method further comprises depositing a second etch stop layer on the second substrate in the at least one first opening. The method further comprises removing the first resist layer from the second substrate. The method further comprises adding a third substrate on the second substrate and the second etch stop layer. The method further comprises depositing a second resist layer on the third substrate, wherein the second resist layer includes at least one second opening. The method further comprises depositing a third etch stop layer on the third substrate in the at least one second opening. The method further comprises removing the second resist layer from the third substrate. The method further comprises etching the second substrate and the third substrate, leaving the first substrate, the first etch stop layer, the second etch stop layer and the second substrate in the at least one first opening, and the third etch stop layer and the third substrate in the at least one second opening. The method further comprises etching an exposed portion of the first etch stop layer, an exposed portion of the second etch stop layer, and the third etch stop layer, forming the multi-level binary grating.

[0029] According to some embodiments, a method of manufacturing a waveguide having a blazed grating structure is provided. The method comprises cutting a substrate off-axis. The method further comprises depositing a resist layer on the substrate, wherein the resist layer includes a pattern. The method further comprises etching the substrate in the pattern using the resist layer as a mask, creating the blazed grating structure in the substrate. The method further comprises removing the resist layer from the substrate.

[0030] According to some embodiments, a method of manipulating light by an eyepiece layer is provided. The method comprises receiving light from a light source at an input coupling grating having a first grating structure characterized by a first set of grating parameters. The method further comprises receiving light from the input coupling grating at an expansion grating having a second grating structure characterized by a second set of grating parameters. The method further comprises receiving light from the expansion grating at an output coupling grating having a third grating structure characterized by a third set of grating parameters. At least one of the first grating structure, the second grating structure, or the third grating structure has a duty cycle that is graded.

[0031] Some embodiments of the present invention provide methods and systems for dithering eyepiece layers of a wearable display device.

[0032] According to some embodiments, a device is provided. The device comprises an input coupling grating having a first grating structure characterized by a first set of grating parameters. The input coupling grating is configured to receive light from a light source. The device further comprises an expansion grating having a second grating structure characterized by a second set of grating parameters varying in at least two dimensions. The second grating structure is configured to receive light from the input coupling grating. The device further comprises an output coupling grating having a third grating structure characterized by a third set of grating parameters. The output coupling grating is configured to receive light from the expansion grating and to output light to a viewer.

[0033] According to some embodiments, an optical structure is provided. The optical structure comprises a waveguide layer lying at least partially in a plane defined by a first dimension and a second dimension. The optical structure further comprises a diffractive element coupled to the waveguide layer and operable to diffract light in the plane. The diffractive element is characterized by a set of diffraction parameters that vary in at least the first dimension and the second dimension.

[0034] Numerous benefits are achieved by way of the present disclosure over conventional techniques. For example, embodiments of the present invention provide methods and systems that improve the reliability and performance of augmented reality display systems. High efficiency heat spreading and heat dissipation devices are described that distribute and dissipate heat generated due to operation of the wearable device. Methods and systems are described for adapting the output of display systems of the wearable device to account for changes in relative positioning of optical sensors, projectors and wearable display optics resulting from uneven thermal distribution or rapid increases in thermal loading.

[0035] Other embodiments of the present disclosure provide methods and systems that reduce or eliminate artifacts including ghost images in projection display systems. Additionally, embodiments of the present disclosure reduce eye strain, reduce artifacts due to stray light, and improve resolution, ANSI contrast, and general signal to noise of the displayed images or videos.

[0036] For example, embodiments of the present invention provide methods and systems that improve the scalability of eyepieces for use in augmented reality applications by decreasing the dimensions of the eyepiece and/or increasing the field of view for the user, or improving light properties of light that is delivered to a user such as brightness. Smaller dimensions of the eyepiece are often critical to user comfort when a user is wearing a particular system. Embodiments of the present invention also enable high quality images to be

projected to the user's eye due to the wide range and density of light exit points within the eyepiece.

[0037] Other embodiments of the present disclosure provide methods and systems for providing gratings on eyepiece layers that improve the passage of light in projection display systems. Additionally, some embodiments of the present disclosure may provide increases in the uniformity of light intensity across an output image being projected to a viewer. In some embodiments, uniformity may be balanced, resulting in improved manufacturability and greater flexibility of design. These and other embodiments of the disclosure along with many of its advantages and features are described in more detail in conjunction with the text below and attached figures.

[0038] Some embodiments of the present invention provide methods and systems that improve uniformity of luminance, uniformity of intensity, diffraction efficiency, and/or brightness of output light, while reducing image artifacts, wave interference, and/or reflections.

[0039] It should be noted that one or more of the embodiments and implementations described herein may be combined to provide functionality enabled by the combination of the different implementations. Accordingly, the embodiments described herein can be implemented independently or in combination as appropriate to the particular application. One of ordinary skill in the art would recognize many variations, modifications, and alternatives.

[0040] These and other embodiments of the disclosure along with many of its advantages and features are described in more detail in conjunction with the text below and attached figures.

BRIEF DESCRIPTION OF THE DRAWINGS

[0041] FIG. **1** is a drawing illustrating an augmented reality (AR) scene as viewed through a wearable AR device according to an embodiment described herein.

[0042] FIG. **2**A illustrates stereoscopic three-dimensional (3D) displays.

[0043] FIG. **2**B illustrates variable depth plane accommodation distances.

[0044] FIG. **3**A illustrates accommodation-vergence focus at a given depth plane.

[0045] FIG. **3**B illustrates accommodation-vergence mismatch relative to a given depth plane.

[0046] FIG. **4** illustrates comparative accommodation-vergence mismatch between two objects beyond a given depth plane.

[0047] FIG. **5** illustrates depth plane selection and effects on accommodation-vergence mismatch according to some embodiments.

[0048] FIGS. **6**A-B illustrate comparative accommodation-vergence mismatch between two objects given certain depth planes according to some embodiments.

[0049] FIGS. **7**A-B illustrate cross section views of light projection into a user's eye through a waveguide according to some embodiments.

[0050] FIG. **8** illustrates a light field projected to a user's eye by a diffractive optical element (DOE) in a waveguide according to some embodiments.

[0051] FIG. **9** illustrates a wide light field projected to a user's eye by a plurality of DOEs in a waveguide according to some embodiments.

[0052] FIG. **10** illustrates a focused light pattern outcoupled to a user's eye by a DOE within a waveguide according to some embodiments.

[0053] FIG. **11** illustrates beamlets injected into a plurality of subpupils of a user's eye according to some embodiments.

[0054] FIG. **12** illustrates focusing certain collimated beamlets through subpupils as if the aggregate beamlets were a larger diameter single beam according to some embodiments.

[0055] FIG. **13** illustrates a stack of waveguides outcoupling light to a user's eye while also permitting world light to permeate through the stack to the user's eye according to some embodiments.

[0056] FIG. **14** illustrates an incoupling DOE, an orthogonal DOE, and an exit DOE configured to redirect injected light into, through, and out of a plurality of waveguides according to some embodiments.

[0057] FIG. **15** illustrates a wearable augmented reality display system according to some embodiments.

[0058] FIG. **16**A illustrates an interaction of a user of an augmented reality display system interacting with a real world environment according to some embodiments.

[0059] FIG. **16**B illustrates components to a viewing optics assembly according to some embodiments.

[0060] FIG. **17** illustrates an exploded view of a head mounted display with certain components according to some embodiments.

[0061] FIG. **18** illustrates an exploded view of a viewing optics assembly according to some embodiments.

[0062] FIG. **19** illustrates a world camera assembly according to some embodiments.

[0063] FIG. **20** illustrates schematically the light paths in a viewing optics assembly (VOA) that may be used to present a digital or virtual image to a viewer, according to an embodiment described herein.

[0064] FIG. **21** illustrates an example of an eyepiece according to an embodiment of the present invention.

[0065] FIG. **22** illustrates an example of layers of waveguides for an eyepiece according to an embodiment of the present invention.

[0066] FIG. **23** illustrates an example of a path of a single beamlet of light incoupled into a waveguide of an eyepiece according to an embodiment of the present invention.

[0067] FIG. **24** illustrates an example of an over/under topology for a waveguide according to an embodiment of the present invention.

[0068] FIG. **25** illustrates an example of an overlap topology for a waveguide according to an embodiment of the present invention.

[0069] FIG. **26** illustrates an example of an in-line topology for a waveguide according to an embodiment of the present invention.

[0070] FIG. **27** illustrates an example of an OPE with zones of varying diffraction efficiency according to an embodiment of the present invention.

[0071] FIG. **28** illustrates an example of a tip and clip topology for a waveguide according to an embodiment of the present invention.

[0072] FIG. **29** illustrates an example of a bowtie topology for a waveguide according to an embodiment of the present invention.

[0073] FIG. **30**A illustrates an example of a bowtie topology for a waveguide according to an embodiment of the present invention.

[0074] FIG. **30**B illustrates various magnified views of diffractive optical features for a waveguide according to an embodiment of the present invention.

[0075] FIG. **30**C illustrates the optical operation of the OPE regions for the waveguide according to an embodiment of the present invention.

[0076] FIG. **31**A illustrates an example of a waveguide which includes an input coupler region having two superimposed diffraction gratings according to an embodiment of the present invention.

[0077] FIG. **31**B illustrates a perspective view of an example of an input coupler region made up of two superimposed diffraction gratings according to an embodiment of the present invention.

[0078] FIG. **32**A illustrates an example of a waveguide having a compact form factor according to an embodiment of the present invention.

[0079] FIG. **32**B illustrates an example of diffractive optical features of an input coupler region of a waveguide according to an embodiment of the present invention.

[0080] FIG. **32**C illustrates an example of diffractive optical features of an OPE region of a waveguide according to an embodiment of the present invention.

[0081] FIG. **33**A illustrates an example of a waveguide having a combined OPE/EPE region in a single-sided configuration according to an embodiment of the present invention.

[0082] FIG. **33**B illustrates an example of a combined OPE/EPE region in a single-sided configuration, captured by an SEM according to an embodiment of the present invention.

[0083] FIG. **33**C illustrates an example of a light path within a waveguide according to an embodiment of the present invention.

[0084] FIG. **33**D illustrates a side view of an example of a light path within a waveguide according to an embodiment of the present invention.

[0085] FIG. **34**A illustrates an example of a waveguide having a combined OPE/EPE region in a two-sided configuration according to an embodiment of the present invention.

[0086] FIG. **34**B illustrates a side view of a waveguide and a light path according to an embodiment of the present invention.

[0087] FIGS. **35**A-**35**J illustrate various designs of waveguides for implementation in an eyepiece according to an embodiment of the present invention.

[0088] FIG. **36**A is a simplified plan view diagram illustrating a diffractive element with a periodically varying index of refraction according to an embodiment of the present invention.

[0089] FIG. **36**B is a simplified plan view diagram illustrating a diffractive element with a distributed variation in index of refraction according to an embodiment of the present invention.

[0090] FIG. **36**C is a simplified plan view diagram illustrating a set of diffractive elements with varying index of refraction according to an embodiment of the present invention.

[0091] FIG. **36**D is a simplified plan view diagram illustrating a set of diffractive elements having different uniform index of refractions according to an embodiment of the present invention.

[0092] FIG. **36**E is a simplified flowchart illustrating a method of fabricating a diffractive element with varying index of refraction according to an embodiment of the present invention.

[0093] FIG. **36**F is an image illustrating a film of varying index of refraction abutting a planar substrate according to an embodiment of the present invention.

[0094] FIG. **36**G is an image illustrating a film of varying index of refraction abutting a diffractive substrate according to an embodiment of the present invention.

[0095] FIG. **36**H is an image illustrating a film of varying index of refraction in a first diffractive element according to an embodiment of the present invention.

[0096] FIG. **36**I is an image illustrating a film of varying index of refraction in a second diffractive element according to an embodiment of the present invention.

[0097] FIG. **36**J is a simplified flowchart illustrating a method of fabricating a diffractive element with varying index of refraction according to an embodiment of the present invention.

[0098] FIG. **36**K is a simplified side view diagram illustrating a variable index of refraction structure for a diffractive element according to an embodiment of the present invention.

[0099] FIG. **36**L is a simplified side view diagram illustrating a multi-layer variable index of refraction structure for a diffractive element according to an embodiment of the present invention.

[0100] FIG. **37** is a schematic diagram of an exemplary optical system using diffractive structures on a substrate according to some embodiments of the present invention.

[0101] FIG. **38** shows photographs of electric field intensity exhibiting wave interference for different fields-of-view and different thicknesses of waveguides according to some embodiments of the present invention.

[0102] FIG. **39**A is a simplified diagram illustrating an undithered OPE and its output image according to some embodiments of the present invention.

[0103] FIG. **39**B is a simplified diagram illustrating a sinusoidally dithered OPE and its output image according to some embodiments of the present invention.

[0104] FIG. **39**C is a simplified diagram illustrating an optimized 2D-dithered OPE and its output image according to some embodiments of the present invention.

[0105] FIG. **39**D shows photographs comparing an image with many artifacts and an image with fewer artifacts according to some embodiments of the present invention.

[0106] FIG. **40**A shows an example of adding continuous phase variation patterns to a diffractive structure according to some embodiments of the present invention.

[0107] FIG. **40**B shows output images from an optical system having a diffractive structure without and with phase variations according to some embodiments of the present invention.

[0108] FIG. **40**C shows an example of adding a discrete phase variation pattern to a diffractive structure according to some embodiments of the present invention.

[0109] FIG. **41**A show simplified diagrams illustrating different slowly-varying dither patterns for gratings according to some embodiments of the present invention.

[0110] FIGS. **41**B-C show different types of discrete phase variation patterns that can be implemented in diffractive structures according to some embodiments of the present invention.

[0111] FIG. **42**A is a simplified diagram illustrating additional dither variation patterns for gratings according to some embodiments of the present invention.

[0112] FIG. **42**B shows an example method of fabricating a diffraction grating with varying grating heights to implement phase perturbations in the diffraction grating according to some embodiments of the present invention.

[0113] FIG. **42**C is a flow diagram of an exemplary method of fabricating a diffractive structure with a phase variation pattern according to some embodiments of the present invention.

[0114] FIG. **42**D is a flow diagram of an exemplary method of manipulating light by a dithered eyepiece layer according to some embodiments of the present invention.

[0115] FIG. **43** is a schematic diagram of light diffracted in an example device including a diffractive structure in a waveguide according to some embodiments of the present invention.

[0116] FIG. **44**A is a simplified diagram illustrating light paths through a beam multiplier according to some embodiments of the present invention.

[0117] FIG. **44**B is a simplified diagram illustrating light paths through a beam multiplier that manipulated wave interference according to some embodiments of the present invention.

[0118] FIGS. **45**A-B are a simplified diagrams comparing light paths through dithering of a grating structure according to some embodiments of the present invention.

[0119] FIG. **46** is a block diagram illustrating a viewing optics system in a near-to-eye display device according to some embodiments of the present invention.

[0120] FIG. **47**A is a block diagram of a waveguide display according to some embodiments of the present invention.

[0121] FIG. **47**B is an output image produced using a waveguide display according to some embodiments of the present invention.

[0122] FIG. **48**A is a block diagram illustrating multiple inputs into a waveguide display according to some embodiments of the present invention.

[0123] FIG. **48**B is an output image from a waveguide display having multiple inputs according to some embodiments of the present invention.

[0124] FIG. **48**C is a simplified flowchart illustrating a method for generation of multiple incoherent images in a waveguide display using multiple input light beams according to some embodiments of the present invention.

[0125] FIG. **49**A is a block diagram illustrating a single input into a waveguide display utilizing a diffractive beam splitter according to some embodiments of the present invention.

[0126] FIG. **49**B is a simplified flowchart illustrating a method for generation of multiple incoherent images in a waveguide display using a diffractive beam splitter according to some embodiments of the present invention.

[0127] FIG. **50**A is a block diagram illustrating a single input into a waveguide display utilizing multiple diffractive beam splitters according to some embodiments of the present invention.

[0128] FIG. **50**B is a simplified flowchart illustrating a method for generation of multiple incoherent images in a waveguide display using multiple diffractive beam splitters according to some embodiments of the present invention.

[0129] FIG. **51**A is a block diagram illustrating a telecentric projector system according to some embodiments of the present invention.

[0130] FIG. **51**B is a block diagram illustrating a non-telecentric projector system according to some embodiments of the present invention.

[0131] FIG. **52** is a block diagram illustrating a system for suppressing reflections from a telecentric projector in a near-to-eye display device according to some embodiments of the present invention.

[0132] FIG. **53**A is a block diagram illustrating a square lattice grating structure on a diffractive optical element according to some embodiments of the present invention.

[0133] FIG. **53**B is a photograph illustrating a circular round element grating structure on a diffractive optical element according to some embodiments of the present invention.

[0134] FIG. **54**A is a top view of binary grating ridges of a diffractive optical element according to some embodiments of the present invention.

[0135] FIG. **54**B is a top review of cross-cut binary grating ridges of a diffractive optical element according to some embodiments of the present invention.

[0136] FIG. **55** is a top view of cross-cut biased grating ridges of a diffractive optical element according to some embodiments of the present invention.

[0137] FIG. **56** is a photograph illustrating a triangular element grating structure on a diffractive optical element according to some embodiments of the present invention.

[0138] FIG. **57** is a photograph illustrating an oval element grating structure on a diffractive optical element according to some embodiments of the present invention.

[0139] FIG. **58** is a simplified flowchart illustrating a method of suppressing reflections from telecentric projectors in near-to-eye display devices according to some embodiments of the present invention.

[0140] FIG. **59**A is a simplified schematic diagram illustrating a plan view of a diffractive structure characterized by a constant diffraction efficiency according to some embodiments of the present invention.

[0141] FIG. **59**B is a simplified schematic diagram illustrating a plan view of a diffractive structure characterized by regions of differing diffraction efficiency according to some embodiments of the present invention.

[0142] FIG. **59**C is a simplified schematic diagram illustrating a plan view of a diffractive structure characterized by regions of differing diffraction efficiency according to some embodiments of the present invention.

[0143] FIGS. **60**A-H are simplified process flow diagrams illustrating a process for fabricating variable diffraction efficiency gratings using gray scale lithography according to some embodiments of the present invention.

[0144] FIGS. **61**A-C are simplified process flow diagrams illustrating a process for fabricating regions with differing surface heights according to some embodiments of the present invention.

[0145] FIGS. **62**A-C are simplified process flow diagrams illustrating a process for fabricating regions with gratings having differing diffraction efficiencies according to some embodiments of the present invention.

[0146] FIGS. **63**A-H are simplified process flow diagrams illustrating use of a multi-level etching process to fabricate regions characterized by differing diffraction efficiencies according to some embodiments of the present invention.

[0147] FIGS. **64**A-H are simplified process flow diagrams illustrating use of a multi-level etching process to fabricate variable diffraction efficiency gratings according to some embodiments of the present invention.

[0148] FIG. **65** is a simplified cross-sectional view of an incoupling grating according to some embodiments of the present invention.

[0149] FIG. **66** is a simplified flowchart illustrating a method of fabricating a diffractive structure with varying diffraction efficiency according to some embodiments of the present invention.

[0150] FIG. **67** is a simplified flowchart illustrating a method of fabricating a diffractive structure characterized by regions of differing diffraction efficiency according to some embodiments of the present invention.

[0151] FIGS. **68**A-D are simplified process flow diagrams illustrating a process for fabricating variable diffraction efficiency gratings using gray scale lithography according to some embodiments of the present invention.

[0152] FIG. **69** is a simplified flowchart illustrating a method of fabricating a diffractive structure with varying diffraction efficiency according to some embodiments of the present invention.

[0153] FIG. **70** illustrates schematically a partial cross-sectional view of an eyepiece according to some embodiments.

[0154] FIG. **71** illustrates schematically exemplary reflectance spectra of some wavelength-selective reflectors according to some embodiments.

[0155] FIG. **72** illustrates schematically a partial cross-sectional view of an eyepiece according to some other embodiments.

[0156] FIG. **73** illustrates schematically a partial cross-sectional view of an eyepiece according to some other embodiments.

[0157] FIG. **74** illustrates schematically exemplary reflectance spectra of a long-pass filter and of a short-pass filter, according to some embodiments.

[0158] FIG. **75** illustrates an example of a metasurface according to some embodiments.

[0159] FIG. **76** shows plots of transmission and reflection spectra for a metasurface having the general structure shown in FIG. **75** according to some embodiments.

[0160] FIGS. **77**A and **77**B show a top view and a side view, respectively, of a metasurface that is formed by one-dimensional nanobeams according to some embodiments.

[0161] FIGS. **77**C and **77**D show a plan view and a side view, respectively, of a metasurface that is formed by one-dimensional nanobeams according to some other embodiments.

[0162] FIGS. **78**A and **78**B show a top view and a side view, respectively, of a single-layer two-dimensional metasurface that is formed by a plurality of nano antennas formed on a surface of a substrate according to some embodiments.

[0163] FIGS. **78**C and **78**D show a plan view and a side view, respectively, of a multilayer two-dimensional metasurface according to some embodiments.

[0164] FIG. **79** shows plots of simulated reflectance as a function of angle of incidence for a wavelength corresponding to green color (solid line), and for a wavelength corresponding to red color (dashed line) of the metasurface illustrated in FIGS. **77**C and **77**D, for TE polarization, according to some embodiments.

[0165] FIG. **80** shows plots of a simulated reflectance spectrum (solid line) and a simulated transmission spectrum (dashed line) of the metasurface illustrated in FIGS. **77**C and **77**D, for TE polarization, according to some embodiments.

[0166] FIG. **81** shows plots of simulated reflectance as a function of angle of incidence for a wavelength corresponding to green color (solid line), and for a wavelength corresponding to red color (dashed line) of the metasurface illustrated in FIGS. **77**C and **77**D, for TM polarization, according to some embodiments.

[0167] FIG. **82** shows plots of a simulated reflectance spectrum (solid line) and a simulated transmission spectrum (dashed line) of the metasurface illustrated in FIGS. **77**C and **77**D, for TM polarization, according to some embodiments.

[0168] FIGS. **83**A-**83**F illustrate schematically how a composite metasurface may be formed by interleaving two sub-metasurfaces according to some embodiments.

[0169] FIGS. **84**A and **84**B show a top view and a side view, respectively, of a metasurface according to some embodiments.

[0170] FIG. **84**C illustrates schematically reflectance spectra of the metasurface illustrated in FIGS. **84**A and **84**B as a function of angle of incidence according to some embodiments.

[0171] FIG. **85**A illustrates schematically a partial side view of an eyepiece **8500** according to some embodiments.

[0172] FIG. **85**B illustrates schematically a top view of the wavelength-selective reflector shown in FIG. **85**A according to some embodiments.

[0173] FIG. **86**A illustrates schematically a partial cross-sectional view of a volume phase hologram according to some embodiments.

[0174] FIG. **86**B illustrates schematically a reflectance spectrum of the volume phase hologram illustrated in FIG. **86**A according to some embodiments.

[0175] FIG. **86**C illustrates schematically a partial cross-sectional view of a volume phase hologram according to some embodiments.

[0176] FIG. **86**D illustrates schematically a reflectance spectrum of the volume phase hologram illustrated in FIG. **86**C according to some embodiments.

[0177] FIG. **86**E illustrates schematically a partial cross-sectional view of a composite volume phase hologram according to some embodiments.

[0178] FIG. **86**F illustrates schematically a side view of a composite volume phase hologram formed on a waveguide according to some embodiments.

[0179] FIG. **87** is a schematic diagram illustrating an example of a projector according to one embodiments.

[0180] FIG. **88** is a schematic diagram illustrating an example of a projector according to one embodiment.

[0181] FIG. **89** is a schematic diagram illustrating multiple colors of light being coupled into corresponding waveguides using an incoupling grating disposed in each waveguide, according to one embodiment.

[0182] FIGS. **90**A-**90**C are top views of distributed sub-pupil architectures according to one embodiment.

[0183] FIG. **91** is a schematic diagram illustrating time sequential encoding of colors for multiple depth planes, according to one embodiment.

[0184] FIG. **92**A is a schematic diagram illustrating a projector assembly according to one embodiment.

[0185] FIG. **92**B is an unfolded schematic diagram illustrating the projector assembly shown in FIG. **92**A.

[0186] FIG. **93**A is a schematic diagram illustrating an artifact formation in a projector assembly according to one embodiment.

[0187] FIG. **93**B is an unfolded schematic diagram illustrating artifact formation in the projector assembly shown in FIG. **93**A.

[0188] FIG. **94** illustrates presence of an artifact in a scene for the projector assembly illustrated in FIG. **92**A.

[0189] FIG. **95**A is a schematic diagram illustrating a projector assembly with artifact prevention according to one embodiment.

[0190] FIG. **95**B is a flowchart illustrating a method of reducing optical artifacts according to one embodiment.

[0191] FIG. **96** illustrates reduction in intensity of the artifact using the projector assembly shown in FIG. **95**A.

[0192] FIG. **97**A is a schematic diagram illustrating artifact formation resulting from reflections from an in-coupling grating element in a projection display system, according to one embodiment.

[0193] FIG. **97**B is an unfolded schematic diagram illustrating artifact formation resulting from reflections from an in-coupling grating in the projection display system shown in FIG. **97**A.

[0194] FIG. **98** is a schematic diagram illustrating reflections from an in-coupling grating element, according to one embodiment.

[0195] FIG. **99**A is a schematic diagram illustrating a projector assembly with artifact prevention, according to another embodiment.

[0196] FIG. **99**B is a flowchart illustrating a method of reducing artifacts in an optical system, according to an embodiment.

[0197] FIG. **100** illustrates reflection of light at the eyepiece in the absence of the reflection prevention element.

[0198] FIG. **101**A illustrates blocking of reflections using an artifact prevention element, according to one embodiment.

[0199] FIG. **101**B is a flowchart illustrating a method of reducing artifacts in an optical system, according to one embodiment.

[0200] FIG. **102** illustrates blocking of reflections using an alternative geometry artifact prevention element, according to one embodiment.

[0201] FIG. **103** is a schematic diagram of a projector assembly with multiple artifact prevention elements, according to one embodiment.

[0202] FIG. **104**A is a schematic diagram illustrating a projector assembly with artifact prevention using color filters, according to one embodiment.

[0203] FIG. **104**B is a unfolded schematic diagram illustrating the projector assembly shown in FIG. **104**A.

[0204] FIG. **104**C is a transmission plot for cyan and magenta color filters, according to one embodiment.

[0205] FIG. **104**D is a schematic diagram illustrating spatial arrangement of color filters and sub-pupils, according to one embodiment.

[0206] FIG. **104**E is a flowchart illustrating a method of reducing artifacts in an optical system, according to one embodiment.

[0207] FIG. **105** is a schematic diagram illustrating a color filter system, according to one embodiment.

[0208] FIG. **106** is a schematic diagram illustrating a wire bonded LED, according to one embodiment.

[0209] FIG. **107** is a schematic diagram illustrating a flip-chip bonded LED, according to one embodiment.

[0210] FIG. **108** is a schematic diagram illustrating an LED integrated with a parabolic beam expander, according to one embodiment.

[0211] FIG. **109** is a schematic diagram illustrating a single pupil system including a projector assembly and eyepiece, according to one embodiment.

[0212] FIG. **110**A-**110**B show perspective views of an optical device;

[0213] FIG. **110**C shows a perspective view of an optics frame of the optical device with multiple electronic components attached thereto;

[0214] FIG. **110**D shows a perspective view of a front band and sensor cover of the optical device;

[0215] FIG. **110**E shows an exploded perspective view of the optics frame and other associated components;

[0216] FIGS. **111**A-**111**D show how heat is distributed along various components of the optical device;

[0217] FIG. **111**E-**111**G show perspective and side cross-sectional views of a heat dissipation system that utilizes forced convection as opposed to the passive convection illustrated in previous embodiments;

[0218] FIG. **112**A shows a cross-sectional view depicting the transfer of heat from a PCB through a conduction layer to a heat-spreading layer;

[0219] FIG. **112**B shows a chart listing the material properties of a conduction layer;

[0220] FIGS. **113**A-**113**D show various heat maps overlaid on parts of the optical device;

[0221] FIG. **114**A shows a perspective view of an optical device in which only one arm is capable of moving with respect to the frame;

[0222] FIG. **114**B shows an overlay illustrating which portions of the optical device deform the most with respect to one another;

[0223] FIG. **114**C shows a top view of the optical device showing a range of motion of the flexible arm; and

[0224] FIG. **114**D shows an overlay illustrating how portions of an optical device in which both arms flex move with respect to one another.

[0225] FIG. **115** is a simplified diagram illustrating optimizations for an eyepiece of a viewing optics assembly according to some embodiments of the present invention.

[0226] FIG. **116**A is a graph illustrating the total thickness variation (TTV) effect on field distortion for a dome apex in the EPE according to some embodiments of the present invention.

[0227] FIG. **116**B is a graph illustrating the TTV effect on field distortion for a flat substrate according to some embodiments of the present invention.

[0228] FIG. **116**C is a graph illustrating measured TTV according to some embodiments of the present invention.

[0229] FIG. **117**A is a simplified diagram illustrating a manufacturing process for a blazed grating structure according to some embodiments of the present invention.

[0230] FIG. **117**B shows photographs illustrating a blazed grating structure according to some embodiments of the present invention.

[0231] FIG. **117**C is a simplified diagram comparing a manufacturing process of a triangular grating structure to a blazed grating structure according to some embodiments of the present invention.

[0232] FIG. **117**D is a simplified diagram illustrating a flat-top ICG structure as compared to a point-top ICG structure according to some embodiments of the present invention.

[0233] FIG. **118** is a simplified process flow diagram illustrating a manufacturing process of a blazed grating structure according to some embodiments of the present invention.

[0234] FIG. **119**A shows photographs illustrating how a blaze geometry looks once wet etched according to some embodiments of the invention.

[0235] FIG. **119**B shows photographs illustrating exemplary scanning electron microscope (SEM) images of four different critical dimensions (CDs) according to some embodiments of the invention.

[0236] FIG. **119**C shows the control of CD of the input coupler (IC) in silicon dioxide creating high efficiency IC according to some embodiments of the invention.

[0237] FIG. **120** is a simplified diagram illustrating imprint-based manufacturing according to some embodiments of the invention.

[0238] FIG. **121**A is a simplified process flow diagram illustrating a manufacturing process of a patterned grating structure for a waveguide according to some embodiments of the invention.

[0239] FIG. **121**B is a graph illustrating the refractive index of a ZrOx film deposited using a PVD type process according to some embodiments of the invention.

[0240] FIG. **121**C is a simplified diagram illustrating varying profiles of material deposited based on deposition parameters and etch profile according to some embodiments of the invention.

[0241] FIG. **121**D shows photographs of high index lines patterned over a large area on a substrate according to some embodiments of the invention.

[0242] FIG. **122** shows photographs of multi-level binary gratings according to some embodiments of the invention.

[0243] FIG. **123** is a simplified process flow diagram illustrating a manufacturing process of a multi-level binary grating structure using a stack of stop layers according to some embodiments of the invention.

[0244] FIG. **124** is a simplified process flow diagram illustrating a manufacturing process of a multi-level binary grating structure using an etching mask according to some embodiments of the invention.

[0245] FIG. **125** shows simplified process flow diagrams illustrating different grating structures due to different deposition angles of an etching mask according to some embodiments of the invention.

[0246] FIG. **126**A is a simplified plan view diagram illustrating a constant grating structure according to some embodiments of the invention.

[0247] FIG. **126**B is a graph illustrating light intensity through a constant grating structure according to some embodiments of the invention.

[0248] FIG. **127**A is a simplified plan view diagram illustrating a grating structure with a graded duty cycle according to some embodiments of the invention.

[0249] FIG. **127**B is a graph illustrating light intensity through a grating structure with a graded duty cycle according to some embodiments.

[0250] FIG. **127**C is a zoomed in, simplified diagram illustrating a grating structure with a graded duty cycle according to some embodiments of the invention.

[0251] FIG. **128** is a flow diagram of an exemplary method of manipulating light by an eyepiece layer having a grating structure with a graded duty cycle according to some embodiments of the present invention

DETAILED DESCRIPTION OF SPECIFIC EMBODIMENTS

[0252] FIG. **1** is a drawing illustrating an augmented reality (AR) scene as viewed through a wearable AR device according to an embodiment described herein. Referring to FIG. **1**, an augmented reality scene **100** is depicted wherein a user of an AR technology sees a real-world park-like setting **106** featuring people, trees, buildings in the background, and a concrete platform **120**. In addition to these items, the user of the AR technology also perceives that he "sees" a robot statue (**110**) standing upon the real-world platform (**120**), and a cartoon-like avatar character (**102**) flying by, which seems to be a personification of a bumble bee, even though these elements (**102**, **110**) do not exist in the real world. Due to the extreme complexity of the human visual perception and nervous system, it is challenging to produce a VR or AR technology that facilitates a comfortable, natural-feeling, rich presentation of virtual image elements amongst other virtual or real-world imagery elements.

[0253] FIG. **2**A illustrates a conventional display system for presenting 3D imagery to a user. Two distinct images **5** and **7**, one for each eye **4** and **6**, are displayed to the user. The images **5** and **7** are spaced from the eyes **4** and **6** by a distance **10** along an optical or z-axis parallel to the line of sight of the viewer. The images **5** and **7** are flat and the eyes **4** and **6** may focus on the images by assuming a single accommodated state, triggering a vergence reflex to match the accommodated state. Such systems rely on the human visual system to combine the images **5** and **7** to provide a perception of depth for the combined image.

[0254] It will be appreciated, however, that the human visual system is more complicated and providing a realistic perception of depth is more challenging. For example, many viewers of conventional 3D display systems depicted in FIG. **2**A find such systems to be uncomfortable or may not perceive a sense of depth at all due to a mismatch in accommodation and vergence, that is, the line of sight to look at an object on a particular depth plane may not be the optimal accommodation distance to focus on the same depth plane. As depicted in FIG. **2**B, a system that can display content at a variable or plurality of depth planes **12** can provide an accommodation-vergence state more similar to the eye's natural function.

[0255] For example, FIG. **3**A depicts eyes **4** and **6** observing content **15** at depth plane **14**. As depicted, content **15** is located at depth plane **14**, where depth plane **14** may be the depth plane of a given 3D system with a single depth plane such as a stereoscopic system. The accommodation distance A_d, the distance eyes **4** and **6** focus at, is the same as vergence distance V_d, the distance eyes **4** and **6** look at. However, in FIG. **3**B content **15***y* is intended to be perceived further away than depth plane **14**, for example a stereoscopic 3D system is configured for a depth plane at two meters but content is intended to appear 3 m away from the user. As depicted, each of eye **4** and **6** will have an accommodation distance A_d to focus on depth plane **14**, but each of eye **4** and **6** will have a respective vergence point **15***a* and **15***b* on depth plane **14**, and an overall vergence distance V_{d1}. The ratio of V_{d1} to A_d may be referred to as "accommodation-vergence

mismatch" (AVM) and at certain AVMs the user may no longer perceive depth of content **15***y* or may experience discomfort as the visual and nervous systems attempt to correct the large AVM.

[0256] It will be appreciated then, the conventional 3D stereoscopic displays work against the accommodation-vergence reflex and induce accommodation-vergence mismatch. Display systems that provide a better match between accommodation and vergence may form more realistic and comfortable simulations of 3D imagery.

[0257] FIG. **4** illustrates the benefits of simulating three-dimensional imagery using multiple depth planes. With reference to FIG. **4**, content **15***y* and **15***z* are placed at respective vergence distances V_{d2} and V_{d3} from eyes **4** and **6**, but the system has only one depth plane **14** to create accommodation distance A_{d2}. The eyes **4** and **6** assume particular accommodated states to bring **15***y* and **15***z* into focus along the z-axis. Consequently, to focus on **15***y* the eyes **4** and **6** assume vergence positions of **15***c* and **15***d* on depth plane **14**; to focus on **15***z* the eyes **4** and **6** assume vergence positions of **15***e* and **15***f* on depth plane **14**. It is readily apparent that the eyes **4** and **6** have a wider vergence stance **15***e* and **15***f* to observe **15***z*, as compared to the vergence stance **15***c* and **15***d* to observe **15***y*, and that for depth plane **14** natural viewing would be felt if **15***e* and **15***f* were collocated on depth plane **14**. This difference in vergence stance, and the ratio of V_{d3} to A_{d2} and V_{d2} to A_{d2} are all illustrative of AVM.

[0258] To create as natural a 3D experience as possible, some embodiments implement multiple depth planes to cap AVM below given thresholds and reduce user discomfort that may otherwise result from AVM. For example, FIG. **5** depicts one embodiment in which tolerated AVM is configured as 0.333 diopters. This diopter distance corresponds to three meters from a user, where AVM would be zero for content rendered at that depth plane. As diopter-to-distance is an inverse relationship, AVM will asymptotically approach but never be more than 0.333 diopters as content approaches optical infinity. As content is rendered closer to a user than 3 m, a second depth plane can be implemented so that content may be displayed at that second depth plane without rising above the 0.333 diopter AVM. Content will then increase in AVM as it is brought in even closer from that second depth plane, just as naturally occurs with objects very close to an eye. For example when bringing a finger in from arm's length towards the eye, the eyes will have a harder and harder time maintaining the same quality of focus on the eye, the finger may appear to jump between focus of a dominant and non-dominant eye or the field of view of the user or may split into two images completely. One of skill in the art will appreciate that additional AVM thresholds are possible and will induce depth plane placements at different distances corresponding to that AVM threshold, or that even more depth planes to render content even closer to the eyes within a particular AVM threshold is possible. FIG. **5** merely illustrates one embodiment with depth planes at 0.333 and 1 diopter (3 meters and 1 meter respectively) to maintain all rendered content beyond seventy-six centimeters below an AVM threshold of 0.333 diopters.

[0259] FIG. **6**B depicts the benefits of multiple depth planes. FIG. **6**A is a duplicate of FIG. **4**, re-displayed for ease of comparison to FIG. **6**B. In FIG. **6**B, a second depth plane **16** is added, at an accommodation distance A_{d3} from eyes **4** and **6**. To focus on content **15***z*, the eyes **4** and **6** no longer need to assume a vergence stance of **15***e* and **15***f* as in FIG. **6**A, but instead can assume the vergence stance **15***g* and **15***h*. With the ratio of V_{d3} to A_{d3} lower as compared to V_{d3} to A_{d2} of FIG. **6**A, a user can focus on the more distant content **15***z* at depth plane **16** with the almost same visual perception required to focus on nearer content **15***y* at depth plane **14**. In other words, the vergence position of **15***g* and **15***h* is much smaller and more natural than the vergence position **15***e* and **15***f* to view the same content **15***z*, by virtue of the multiple depth plane system of FIG. **6**B.

[0260] FIG. **7**A depicts a simplified display configuration to present the human eyes with an external light pattern that can be comfortably perceived as augmentations to physical reality, with high levels of image quality and 3D perception, as well as being capable of letting real world light and images be perceived. As depicted, a single at least partially transparent waveguide **104** receives a light pattern **106**, and a diffraction grating **102** within waveguide **104** outcouples the light to eye **58**. In some embodiments, diffraction grating **102** is configured for a particular depth plane, such that when lens **45** focuses through accommodation-vergence reflex on the light pattern it receives, retina **54** processes the light pattern as an image located at the configured depth plane. In some embodiments, light pattern **106** is configured for a particular depth plane, such that when lens **45** focuses through accommodation-vergence reflex on the light pattern it receives, retina **54** processes the light pattern as an image located at the configured depth plane.

[0261] As depicted, for illustrative purposes only, light pattern **106** is a photon-based radiation pattern into waveguide **104** but one of skill in the art will appreciate that light pattern **106** could easily be a single beam of light injected into waveguide **104** and propagates to diffraction grating **102** by total internal reflection before outcoupling to eye **58**. One of skill in the art will further appreciate that multiple diffractive gratings **102** may be employed to direct light pattern **106** to eye **58** in a desired manner.

[0262] To create richer fields of view for such a system, FIG. **7**B depicts a second at least partially transparent waveguide **204** configured to outcouple light pattern **206** to eye **58** in much the same way as depicted in FIG. **6**A. Second waveguide **204** outcouples light pattern **206** to eye **58** by diffraction grating **202**. Eye **58** receives light pattern **206** on retina **54**, but lens **45** perceives light **206** at a different depth plane through a different accommodation-vergence reflex than that required for light pattern **106**. For example, light pattern **106** is gathered in one part of the retina **54** with a first depth perception **500**, whereas light pattern **206** is gathered in a second part of the retina **54** with a second depth perception **502**. In instances where light patterns **106** and **206** correspond to the same rendered augment reality content, the depth richness creates a more realistic and comfortable to perceive image than that simply produced as depicted in FIG. **6**A by a single depth plane. Furthermore, in some embodiments, a frame-sequential configuration of light pattern **106** and **206** may present eye **58** with a sequence of frames at high frequency that provides the perception of a single coherent augmented reality scene, or augmented reality content in motion, across multiple depths and fuller field of view than a narrow projection perceived by a retina **54** at a single depth plane.

[0263] FIG. **8** further depicts a simplified version of a planar waveguide **216**, which may comprise at least two waveguides configured to propagate light of a particular

wavelength, but at different depth planes relative to eye **58**. As depicted, a diffraction grating **220**, which may be a diffractive optical element (DOE) has been embedded within the entire vertical length of planar waveguide **216** such that as a light pattern is totally internally reflected along planar waveguide **216**, it intersects the DOE **220** at a multiplicity of locations. As light is outcoupled to eye **58**, portions may nonetheless continue to propagate due to the diffraction efficiency of the DOE **220** within planar waveguide **216**. As portions continue to totally internally reflect through planar waveguide **216**, they may encounter the additional DOE **220** gratings and outcouple to the eye, or other portions may continue to propagate by total internal reflection along the length of planar waveguide **216**.

[0264] Preferably, DOE **220** has a relatively low diffraction efficiency so that only a portion of the light pattern propagating within planar waveguide **216** is diffracted away toward the eye **58** at any given intersection of the DOE **220**, while the rest continues to move through the planar waveguide **216** via total internal reflection. The light pattern carrying any image information is thus divided into a number of related light beams that exit planar waveguide **216** at a multiplicity of locations and the result is a large pattern of outcoupled light incident upon eye **58** to create a rich image perception from a single light pattern.

[0265] FIG. **9** depicts a plurality of outcoupled light patterns, illustrating the even richer light field incident upon eye **58** when light propagates a waveguide in both an x and y direction before outcoupling in a z direction towards eye **58**. Embodiments with a series of DOEs **220** configured to permit partial diffraction of light patterns outcoupled in a z direction, and permit other portions to totally internally reflect in an x or y direction before outcoupling in a z direction create imagery across an entire retina of eye **58**

[0266] FIG. **10** depicts the retinal pattern of a plurality of outcoupled light patterns from outcoupling DOEs **110** from waveguide **106**; as depicted, FIG. **10** illustrates the multiple retinal areas that may activated by a single light pattern **106**, enabling wider fields of view or time sequential framing of light patterns to excite different part of the retina to perceive motion of rendered augmented reality content. One of skill in the art will appreciate that when combined with the rich field of view patterns depicted in FIG. **9**, the retina can receive a large amount of light patterns by virtue of the DOEs **110** throughout waveguide **106**. As depicted, FIG. **10** illustrates all light focusing in lens **45** of eye **58**. FIG. **11** illustrates a "sub-pupil" system wherein a multiplicity of incoming light pattern beamlets **332** enters the eye through separate small exit pupils **330** of eye **58** at discrete vertical focal points. By doing so, smaller beamlets of a light pattern, which may be easier to project and diffract through a waveguide or can carry specific light pattern properties such as wavelength, can be aggregated to be perceived as a larger diameter beam. For example, whereas the light pattern of FIG. **7**A produced a focal point in lens **45** from a light pattern **106**; the beamlets **332** may be much smaller and still produce the same effect by creating a plurality of sub-pupils **330**.

[0267] In other words, a set of multiple narrow beams may be used to emulate what is going on with a larger diameter variable focus beam; if the beamlet diameters are kept to a maximum of about 0.5 mm, they maintain a relatively static focus level, and to produce the perception of out-of-focus when desired, the beamlet angular trajectories may be selected to create an effect much like a larger out-of-focus beam (such a defocussing treatment may not be the same as a Gaussian blur treatment as for a larger beam, but will create a multimodal point spread function that may be interpreted in a similar fashion to a Gaussian blur).

[0268] In a some embodiments, the beamlets are not mechanically deflected to form this aggregate focus effect, but rather the eye receives a superset of many beamlets that includes both a multiplicity of incident angles and a multiplicity of locations at which the beamlets intersect the pupil; to represent a given pixel from a particular viewing distance, a subset of beamlets from the superset that comprise the appropriate angles of incidence and points of intersection with the pupil (as if they were being emitted from the same shared point of origin in space) are matched by color and intensity to represent that an aggregate wavefront, while beamlets in the superset that are inconsistent with the shared point of origin are not matched with that color and intensity and will not be perceived.

[0269] FIG. **12** shows another subset of beamlets representing an aggregated collimated beam **334** in the field of view of eye **58**. Here, the eye **58** is accommodated to infinity to account for collimated beam **334**, so the beamlets within the collimated beam **334** fall on the same spot of the retina, and the pixel created by the beamlets is perceived to be in focus. Similarly, collimated beam **326** falls on a different part of the retina to perceive a pixel in that area of the field of view. If, in contrast, a different subset of beamlets were chosen that were reaching the eye as a diverging fan of rays, those beamlets would not fall on the same location of the retina and not be perceived as in focus until the eye were to shift accommodation to a near point that matches the geometrical point of origin of that fan of rays.

[0270] FIG. **13** depicts a stack **664** of planar waveguides each fed a light pattern by an incoupling DOE **690** diffracting light of a particular wavelength into a planar waveguide of stack **644**. Each waveguide comprises a plurality of DOEs **680**, **682**, **684**, **686**, and **688** configured to diffract light through the respective planar waveguide and outcouple towards eye **58** to create the perception of augmented reality content across a field of view or at multiple depth planes. FIG. **13** depicts five waveguides within stack **644** for illustrative purposes only, preferably a stack **664** comprises six waveguides, corresponding to two waveguides associated with a depth plane at each of a red, green, and blue wavelength of light. World light **144** may also permeate and transmit through stack **644**, as each waveguide within stack **644** is at least partially transparent to permit rendering of augmented reality content in conjunction with natural perception of the real world environment.

[0271] In some embodiments, and as depicted in FIG. **14**, an eyepiece **1200** to an augmented reality display system may comprise a plurality of DOE types disposed on a waveguide to direct light with particular properties to a user's eye. A plurality of light patterns **1240**, **1242** and **1244** are injected into a waveguide stack comprising waveguides **1210**, **1220**, and **1230**. In some embodiments, plurality of light patterns **1240**, **1242**, and **1244** are injected from a common light source, but represent different wavelengths within the common light source. In some embodiments, each of light pattern **1240**, **1242** and **1244** are separate light beams in a particular wavelength, for example red, green and blue light. In some embodiments, each of light patterns **1240**, **1242**, and **1244** are injected to respective waveguide

1210, **1220**, and **1230** by incoupling DOEs **1212**, **1222**, and **1232**. Each incoupling DOE **1212**, **1222**, and **1232** diffracts at least a portion of light of a particular wavelength of light pattern **1240**, **1242**, or **1244** into one of waveguide **1210**, **1220**, or **1230** configured to propagate the incoupled light of the same wavelength of incoupling DOE **1212**, **1222**, and **1232**. In some embodiments, after incoupling, light patterns **1240**, **1242**, and **1244** propagate into OPE **1214**, **1224**, and **1234** respectively. OPE **1214**, **1224** and **1234** diffract a portion of light into EPE **1250**, **1252**, and **1254** respectively, where light patterns **1240**, **1242**, and **1244** are outcoupled in a z direction towards the eye of a user.

[0272] In some embodiments, the net effect of the plurality of light patterns diffracted through a series of waveguides and a plurality of DOEs and then outcoupled to the eye of a user creates a field of view rendering and depth plane placement of virtual or augmented reality content comfortably perceived by the user.

[0273] FIG. **15** illustrates an example of wearable display system **80**. The display system **80** includes a head mounted display **62**, and various mechanical and electronic modules and systems to support the functioning of that display **62**. The display **62** may be coupled to a frame **64**, which is wearable by a display system user or viewer **60** and configured to position the head mounted display **62** in front of the eyes of the user **60**. In some embodiments, a speaker **66** is coupled to the frame **64** and positioned proximate the ear canal of the user (in some embodiments, another speaker, not shown, is positioned adjacent the other ear canal of the user to provide for stereo/shapeable sound control). The head mounted display **62** is operatively coupled **68**, such as by a wired lead or wireless connectivity, to a local data processing module **70** which may be mounted in a variety of configurations, such as fixedly attached to the frame **64**, fixedly attached to a helmet or hat worn by the user, embedded in headphones, or otherwise removably attached to the user **60** (e.g., in a backpack-style configuration, in a belt-coupling style configuration).

[0274] The local data processing module **70** may comprise a processor, as well as digital memory, such as non-volatile memory (e.g., flash memory), both of which may be utilized to assist in the processing, caching, and storage of data. The data include data a) captured from sensors (which may be, e.g., operatively coupled to the frame **64**) or otherwise attached to the user **60**, such as image capture devices (such as cameras), microphones, inertial measurement units, accelerometers, compasses, GPS units, radio devices, and/or gyros; and/or b) acquired and/or processed using remote processing module **72** and/or remote data repository **74**, possibly for passage to the display **62** after such processing or retrieval. The local data processing module **70** may be operatively coupled by communication links **76**, **78**, such as via a wired or wireless communication links, to the remote processing module **72** and remote data repository **74** such that these remote modules **72**, **74** are operatively coupled to each other and available as resources to the local processing and data module **70**.

[0275] In some embodiments, the local data processing module **70** may comprise one or more processors configured to analyze and process data and/or image information. In some embodiments, the remote data repository **74** may comprise a digital data storage facility, which may be available through the internet or other networking configuration in a "cloud" resource configuration. In some embodiments, all data is stored and all computations are performed in the local processing and data module, allowing fully autonomous use from a remote module.

[0276] In some embodiments, local data processing module **70** is operatively coupled to battery **82**. In some embodiments, battery **82** is a removable power source, such as over the counter batteries. In other embodiments, battery **82** is a lithium-ion battery. In some embodiments, battery **82** comprises both an internal lithium-ion battery chargeable by user **60** during non-operation times of wearable display system **80** and removable batteries such that a user may operate wearable display system **80** for longer periods of time without having to be tethered to a power source to charge the lithium-ion battery or having to shut the wearable display system off to replace batteries.

[0277] FIG. **16**A depicts a user **1660** wearing an augmented reality display system rendering augmented reality content as user **1660** moves through a real world environment **1600**. The user positions the augmented reality display system at positions **1610**, and the augmented reality display system records ambient information of the passable world relative to positions **1610** such as pose relation to mapped features or directional audio inputs. Positions **1610** are aggregated to data inputs **1612** and processed at least by passable world module **1620**, such as in remote processing module **72** depicted in FIG. **15**. Passable world module **1620** determines where and how augmented reality content **1630** can be placed in the real world as determined from inputs **1612**, such as on a fixed element **1632** (a table as depicted in FIG. **16**A) or within structures not yet within a field of view **1640** or relative to mapped mesh model of the real world **1642**. As depicted, fixed elements **1632** serves as a proxy for any fixed element within the real world which may be stored in passable world module **1620** so that user **1660** can perceive content on table **1632** without having to map table **1632** each time user **1660** sees it. Fixed content **1632** may, therefore, be a mapped mesh model from a previous modeling session or determined from a separate user but nonetheless stored on passable world module **1620** for future reference by a plurality of users. Therefore, passable world model could recognize the environment **1600** from a previously mapped environment and display augmented reality content without the user's device mapping the environment **1600** first, saving computation process and cycles and avoiding latency of any rendered augmented reality content.

[0278] Similarly, mapped mesh model of the real world **1642** can be created by the augmented reality display system and appropriate surfaces and metrics for interacting and displaying augmented reality content **1630** can be mapped and stored in the passable world module **1620** for future retrieval by the user or other users without the need to re-map or model. In some embodiments aggregated data inputs **1612** are inputs such as geolocation, user identification, and current activity to indicate to passable world module **1620** which fixed elements **1632** are available, which augmented reality content **1630** has last been placed on fixed element **1632** and whether to display that same content (such augmented reality content being "persistent" content regardless of user viewing a particular passable world model).

[0279] FIG. **16**B depicts a schematic of a viewing optics assembly **1664** and the attendant components. Oriented to user eyes **1666**, in some embodiments, two eye tracking cameras **1662** detect metrics of user eyes **1666** such as eye

shape, eyelid occlusion, pupil direction and glint on user eyes **1666**. In some embodiments, a depth sensor **1690**, such as a time of flight sensor, emits relay signals to the world to determine distance to given objects. In some embodiments, world cameras **1650** record a greater-than-peripheral view to map the real world environment and detect inputs that may affect augmented reality content. Camera **1680** may further capture a specific timestamp of real world images within a user field of view. Each of world cameras **1650**, camera **1680** and depth sensor **1690** have respective fields of view of **1652**, **1682**, and **1692** to collect data from and record a real world scene, such as real world environment **1600** depicted in FIG. **16**A.

[0280] Inertial measurement units **1670** may determine movement and orientation of viewing optics assembly **1664**. In some embodiments, each component is operatively coupled to at least one other component; for example depth sensor **1690** is operatively coupled to eye tracking cameras **1662** as a confirmation of measured accommodation against actual distance a user eyes **1666** are looking at.

[0281] FIG. **17** depicts a head mounted display **1700**, such as the head mounted display **62** depicted in FIG. **15**. Viewing optics assembly **1702** comprises rigid frame **1708** to which projectors **1704** are coupled. In some embodiments, projectors **1704** comprise an LCOS mechanism with LED illuminators and spatial light modulators. In some embodiments, viewing optics assembly **1702** further comprises eyepieces **1706**. In some embodiments, eyepieces **1706** are comprise a plurality of waveguides configured to direct light from projectors **1704** to an eye of a user of head mounted display **1700**. In some embodiments, viewing optics assembly **1702** further comprises eye tracking cameras (not depicted) configured to collect eye tracking data of a wearer of head mounted display **1700**, such as eyelid position or pupil direction.

[0282] In some embodiments, viewing optics assembly **1702** hosts additional sensors and components arranged on rigid frame **1708**, such as primary control board (PCB) **1716**. PCB **1716** hosts various processors and circuitry to operate the various components assembled within viewing optics assembly **1702** and rigid frame **1708**. In some embodiments, world cameras **1718** attach to rigid frame **1708** at either end of viewing optics assembly **1702**. In some embodiments, world cameras **1718** are instead disposed between eyepieces **1706** of viewing optics assembly **1702**. In some embodiments, depth sensor **1719** is attached to rigid frame **1708** between eyepieces **1706**. In some embodiments, depth sensor **1719** is a vertical cavity surface emitting laser (VCSEL), in some embodiments depth sensor **1719** is an edge-emitting laser or other time of flight sensor. One of skill in the art will appreciate other sensors and components that may be hosted within viewing optics assembly **1702** and operably controlled by primary control board **1716**, for example, IMUs or picture cameras may be disposed on viewing optics assembly **1702** or attached to rigid frame **1708**.

[0283] In some embodiments, front band **1710** couples to viewing optics assembly **1702**. Front band **1710** both protects components of viewing optics assembly **1702** from external elements, but also serves as a thermal barrier between a user of head mounted display **1700** and viewing optics assembly **1702**. In some embodiments, sensor cover **1712** attaches to front band **1710** to further protect viewing optics assembly **1702** and components thereon.

[0284] In some embodiments, arms **1714** are coupled to rigid frame **1708** and are configured to traverse the head of a user of head mounted display system **1700** and maintain eyepieces **1706** in front of a user's eyes. In some embodiments, arms **1714** are configured to rest on the ears of a user; in some embodiments, frame arms **1714** are configured to retain inward tension to grip the head of the user to maintain a secure position on a user's head. In some embodiments, pads **1715** are attached to the inside of arms **1714** (inside being the side of arms **1714** in contact with the user). In some embodiments, pads **1715** comprise heat spreaders to mitigate thermal effects within head mounted display **1700**. In some embodiments, pads **1715** are made from a soft foam or coated with a rubber interface to semi-deform when placed in compression against a user's head from inward tension of arms **1714** and still produce a comfortable feel to the user.

[0285] In some embodiments, audio assembly **1720** is coupled to rigid frame **1708** and traverse either of arms **1714** to place speakers **1722** proximate to an ear of a user of head mounted display system **1700**. In some embodiments, PCB **1716** further controls audio inputs and outputs to audio assembly **1720**. In some embodiments audio assembly **1720** comprises a microphone to record sounds from the external world and relay them to primary control board **1716**. Primary control board **1716**, given such audio inputs may perform a variety of functions. For example, given microphone inputs from audio assembly **1720**, head mounted display **1700** can store them for future retrieval (such as in remote data repository **74** depicted in FIG. **15**), alter augmented reality content performance in response to given audio input (e.g. a verbal "off" command could shut the entire system down), or transmit the audio input to other user of communications devices (e.g. phone calls, voice messaging for electronic delivery). Cables **1724** facilitate communication between components throughout head mounted display **1700**, as well as communication to a local data processing module such as local data processing module **70** depicted in FIG. **15**.

[0286] In some embodiments, inner covers **1707** may provide further optical effects to a user. For example, inner covers **1707** may include a prescriptive lens to adjust optical properties of augmented reality content to a particular vision prescription of a user. Such a prescriptive lens would be disposed between the eye of a user and a eyepiece **1706** of head mounted display **1700**. In some embodiments, inner covers **1707** may include detachable light modifiers, such as polarized lens to reflect or absorb certain light.

[0287] FIG. **18** depicts an exploded view of viewing optics assembly **1800**. Rigid frame **1808** houses eyepieces **1806**, which may comprise a plurality of waveguides for incoupling light into the eye of a user of head mounted display **1700** (depicted in FIG. **17**) to which viewing optics assembly **1800** is a part of Projector **1804**, depicted at **1804'** in a cross section view as an LCOS system with a polarized beam splitter and plurality of lens, optically couples to eyepieces **1806** at incoupling point **1805**. In some embodiments, incoupling point **1805** is the entry point for injected light into the eyepiece **1806** and waveguides within the eyepiece **1806**.

[0288] Eyepieces **1806** are affixed to rigid frame **1808**. Rigid frame **1808** further houses mounting structure **1811**. Mounting structure **1811** may house cover lens **1809**, disposed on the world side of viewing optics assembly **1800**, or

inner cover **1707** depicted in FIG. **17** on the user side of a viewing optics assembly. In some embodiments, cover lens **1809** may comprise anti-scratch material or other protective covering to prevent contact of the eyepieces **1806** such as with oils from fingertips or dust and debris from the external environment. In some embodiments, cover lens **1809** may include light modifiers, such as polarized lens to reflect or absorb certain light. In some embodiments, eyepieces **1806** comprise such a protective cover lens in addition to the plurality of waveguides. In some embodiments, eye tracking system **1803** couples to mounting structure **1811** to dispose a pair of eye tracking cameras at the bottom of mounting structure **1811** looking upward into the eyes of a user.

[0289] FIG. **19** further depicts various sensors and components that may be attached to a viewing optics assembly or rigid frame of a head mounted display system in closer detail. Depth sensor **1903** is shown fully assembled as a depth sensor that may be attached to a viewing optics assembly or rigid frame. Depth sensor **1903** may further be comprised of depth sensor housing assembly **1905**, vertical cavity surface emitting laser (VCSEL) **1902**, and depth imager **1904**.

[0290] Six degree of freedom (6DoF) sensor **1906** is housed within 6DoF housing **1907** and operatively coupled to viewing optics assembly (or primary control board **1716** as depicted in FIG. **17**) through 6DoF flex **1909**. 6DoF sensor **1906** may provide inertial measurement unit information to a head mounted display to provide information on location, pose, and motion of a user to a head mounted display. In some embodiments inertial measurements are provided by IMUs **1926** coupled to world camera assembly **1918**. IMUs **1926** provide positional information through accelerometer and gyro measurements, and in some embodiments operatively couple to 6 DoF sensor **1909** to initiate a change to a sensor or component position within a viewing optics assembly. For example, a measurement of IMU **1926** indicating that a user is rotating the head pose to look down may prompt 6DoF sensor **1906** to redirect depth sensor **1902** to adjust depth measurements downward as well, in time with or even in front of the IMU **1926** measurements to avoid latency in measuring. In other words, if the IMU **1926** is detecting motion, 6DoF sensor **1906** is configured to manipulate any one or more of the sensors and components within a viewing optics assembly to continue rendering accurate content matching the detected motion with no latency in augmented reality content detectable by the user. Viewing optics display may host one or more 6DoF sensors **1906** or IMUs **1926**.

[0291] FIG. **19** further depicts world camera assembly **1918**. In some embodiments, world camera assembly **1918** comprises four world cameras, two disposed to look substantially outward relative to a user's field of view, and two disposed to look substantially obliquely to provide a greater-than-peripheral field of view information to the viewing optics assembly. Additional, or fewer, world cameras are of course possible. A picture camera **1928** may be coupled to world camera assembly **1918** to capture real time images or videos within a field of view of the user or picture camera **1928**. World camera assembly **1918** may provide visual information to measured sensor information, or activate certain sensors. For example, a world camera may provide constraints on sensors to only detect and gather information within the field of view of the world cameras, or may communicate with a projector to only use processor power to render content within the field of view. For example, a graphics processor unit (GPU) within a local data processing module **70** as depicted in FIG. **15** may only be activated to render augmented reality content if world cameras bring certain objects into certain fields of view; whereas depth sensors and accelerometers and geolocators within a head mounted display or wearable display system may record input to an environment relative to rendering augmented reality content, a GPU may not be activated until the world cameras actually bring such input into a field of view of the user.

[0292] For example, the greater-than-peripheral field of view of the world camera assembly **1918** may begin to process imaging of augmented reality content in a GPU even though the content is not yet within a field of view of a user. In other embodiments, the greater-than-peripheral field of view may capture data and images from the real world and display a prompt to the user's field of view of the activity within the world camera assembly **1918** field of view but outside the user field of view.

[0293] FIG. **20** illustrates schematically the light paths in a viewing optics assembly (VOA) that may be used to present a digital or virtual image to a viewer, according to one embodiment. The VOA includes a projector **2001** and an eyepiece **2000** that may be worn by a viewer. In some embodiments, the projector **2001** may include a group of red LEDs, a group of green LEDs, and a group of blue LEDs. For example, the projector **2001** may include two red LEDs, two green LEDs, and two blue LEDs. The eyepiece **2000** may include one or more eyepiece layers. In one embodiment, the eyepiece **2000** includes three eyepiece layers, one eyepiece layer for each of the three primary colors, red, green, and blue. In another embodiment, the eyepiece **2000** may include six eyepiece layers, one set of eyepiece layers for each of the three primary colors configured for forming a virtual image at one depth plane, and another set of eyepiece layers for each of the three primary colors configured for forming a virtual image at another depth plane. In yet another embodiment, the eyepiece **2000** may include three or more eyepiece layers for each of the three primary colors for three or more different depth planes. Each eyepiece layer includes a planar waveguide and may include an incoupling grating (ICG) **2007**, an orthogonal pupil expander (OPE) region **2008**, and an exit pupil expander (EPE) region **2009**.

[0294] The projector **2001** projects image light onto the ICG **2007** in an eyepiece layer **2000**. The ICG **2007** couples the image light from the projector **2001** into the planar waveguide propagating in a direction toward the OPE region **2008**. The waveguide propagates the image light in the horizontal direction by total internal reflection (TIR). The OPE region **2008** also includes a diffractive element that multiplies and redirects image light from the ICG **207** propagating in the waveguide toward the EPE region **2009**. In other words, the OPE region **2009** multiplies beamlets in an orthogonal direction that are delivered to the different portions of the EPE. The EPE region **2009** includes an diffractive element that outcouples and directs a portion of the image light propagating in the waveguide in a direction approximately perpendicular to the plane of the eyepiece layer **2000** toward a viewer's eye **2002**. In this fashion, an image projected by projector **2001** may be viewed by the viewer's eye **2002**.

[0295] As described above, image light generated by the projector **2001** may include light in the three primary colors, namely blue (B), green (G), and red (R). Such image light can be separated into the constituent colors, so that image light in each constituent color may be coupled to a respective waveguide in the eyepiece. Embodiments of the present disclosure are not limited to the use of the illustrated projector and other types of projectors can be utilized in various embodiments of the present disclosure.

[0296] Although a projector **2001** including an LED light source **2003** and a liquid crystal on silicon (LCOS) spatial light modulator (SLM) **2004**, embodiments of the present disclosure are not limited to this projector technology and can include other projector technologies, including fiber scanning projectors, deformable mirror devices, micro-mechanical scanners, use of lasers light sources rather than LEDs, other arrangements of optics, waveguides, and beam-splitters including front lit designs, and the like.

[0297] FIG. **21** illustrates an example of an eyepiece **2100** according to an embodiment of the present invention. The eyepiece **2100** may include a world side cover window **2102** and an eye side cover window **2106** to protect one or more waveguides **2104** positioned between the world side cover window **2102** and the eye side cover window **2106**. In some embodiments, the eyepiece **2100** does not include one or both of the world side cover window **2102** and the eye side cover window **2106**. The one or more waveguides **2104** may be coupled together in a layered arrangement such that each individual waveguide is coupled to one or both of its neighboring waveguides. In some embodiments, the one or more waveguides **2104** are coupled together via an edge seal (such as edge seal **2208** shown in FIG. **22**) such that the one or more waveguides **2104** are not in direct contact with each other.

[0298] FIG. **22** illustrates an example of layers of waveguides **2204** for an eyepiece **2200** according to an embodiment of the present invention. As can be seen, each waveguide **2204** can be aligned on top of one another with air space or another material disposed between. In one illustrative example, the world side cover window **2202** and the eye side cover window **2206** can be 0.330 mm thick. In such an example, each waveguide **2204** can be 0.325 mm thick. In addition, between each layer can be an air space that is 0.027 mm thick. A person of ordinary skill will recognize that the dimensions can be different. FIG. **22** also illustrates that each waveguide **2204** can be associated with a color and a depth plane. For example, the eyepiece **2200** can include red waveguides for 3 m and 1 m depths planes. The red waveguides can relay red light and outcouple red light to an eye of a user at the designated depths. The eyepiece can further include blue waveguides for 3 m and 1 m depth planes. The blue waveguides can relay blue light and outcouple blue light to the eye of the user at the designated depths. The eyepiece can further include green waveguides for 3 m and 1 m depth planes. The green waveguides can relay green light and outcouple green light to the eye of the user at the designated depths. A person of ordinary skill will recognize that the waveguides can be in a different order than illustrated in FIG. **22**. A depth plane relates to the optical power of the respective waveguide, such that light outcoupled from the EPE of that waveguide will diverge and be perceived by a user to originate at a certain distance from the user: one of skill in the art will appreciate that alternative designated depths may be used and that the 3 m and 1 m depth planes used herein and in FIG. **22** are merely for illustrative purposes.

[0299] FIG. **23** illustrates an example of a path of a single beamlet of light incoupled into a waveguide **2312** of an eyepiece **2300** according to an embodiment of the present invention. The waveguide **2312** can include an ICG **2320**, an OPE **2330**, and an EPE **2340**, each disposed on or within a substrate **2302** comprised of a material capable of guiding optical waves by total internal reflection (typically a dielectric material having a high permittivity). In some embodiments, the eyepiece **2300** can include three waveguides **2312**, **2314**, and **2316**, each waveguide corresponding to a particular wavelength of light. Additional or fewer waveguides are possible. Each of waveguides **2314** and **2316** can include an ICG, an OPE, and an EPE, similar to the waveguide **2312**. In some embodiments, injected light **2322** can enter the eyepiece **2300** at the ICG **2320** in a z-direction orthogonal to the depiction of FIG. **23**. The injected light **2322** can enter the ICG **2320** where the grating within the ICG **2320** may diffract certain wavelengths of light within the incoupled light **2322**, and other wavelengths of the incoupled light **2322** continue through to subsequent waveguide layers of the eyepiece **2310**. In some embodiments, the ICG **2320** is a plurality of separate gratings specific to a particular wavelength.

[0300] The incoupled light **2322** can be diffracted by the ICG **2320** in certain directions within the waveguide, spanning a range such as depicted by fan pattern **2324** toward the OPE **2330** in a generally +x-direction, but also in a range spanning a fan pattern **2326** away from the OPE **2330** in a generally −x-direction. Other light paths spanning other fan patterns are of course possible and depend on the projection optics, and the particular grating and diffraction pattern configured by the ICG **2320**. That is, light does not diffract into the waveguide as a diverging beam, but in some embodiments the progressive distributed sampling of portions of image light may create a progressively expanding distribution pattern of beamlets across an eyepiece. The incoupled light **2322** that is diffracted within the depicted fan pattern **2324** can generally follow a light path **2328** to enter the OPE **2330** and traverse in an +x-direction, with attendant distributed sampling through the OPE **2330** as it strikes the diffractive gratings making up the OPE **2330**, with portions periodically directed down to the EPE **2340** and traversing in a −y-direction before outcoupling in a −z-direction towards the eye of a user.

[0301] As FIG. **23** depicts, much light in the wavelength corresponding to the waveguide **2312** may be lost either due to directional loss such as light diffracted to the fan pattern **2326** or due to capture loss due to an inadequately positioned or sized OPE **2330** to capture all light within the fan pattern **2324**.

[0302] FIG. **24** illustrates an example of an over/under topology for a waveguide **2400** according to an embodiment of the present invention. In some embodiments, the light can be associated with, or from, a projected image. In some embodiments, an eyepiece, and a waveguide (e.g., the waveguide **2400**), can be at least partially transparent such that a user can see through the eyepiece. In some embodiments, the waveguide **2400** can include one or more areas, each area with a particular grating. For example, the waveguide **2400** can include an input area with an incoupling DOE (e.g., ICG **2420**). The incoupling DOE can receive light

from a projector relay, as described throughout this description. The light can be incoming to the input area orthogonal to the waveguide **2400**. The ICG **2420** can incouple the light into the waveguide **2400** (i.e., into the substrate **2402**).

[0303] In some embodiments, the waveguide **2400** can further include a first area, also referred to as a portion of the waveguide (e.g., an orthogonal pupil expander **2430**) having a first grating. The first grating can be disposed within or on a planar surface of the waveguide **2400** to manipulate the light propagating in the waveguide **2400** by total internal reflection after diffraction or incoupling into the planar waveguide by the ICG **2420**. In some embodiments, the periodic structures of the first grating redirect image light throughout the first area. Such redirection occurs through diffractive sampling of an incoupled light beam as the incoupled light beam passes a periodic structure of the first grating. Accordingly, gratings described herein may multiply (or clone) the viewing pupil of a projected image by diffracting the beams comprising a projector pupil many times over to create a plurality of beamlets propagating through the waveguide. In many instances, each beamlet carries the image data, and when the plurality of beamlets eventually outcouple from the waveguide **2400** as described below, the user eye perceives the emerging plurality of beamlets as an enlarged sampled pupil conveying the image information. In some embodiments, the first grating can direct at least a portion of the light (e.g., a cloned or sampled beamlet) to a second area (e.g., an EPE **2440**). The second area or portion can have a second grating comprising periodic structures. In such embodiments, an orientation of a periodic structure of the first grating can be such that a sampled beamlet is diffracted at a nominally right angle when the beamlet interacts with a portion of the, simultaneously diffracting a beamlet towards the EPE and directing a sample further across the OPE to continue diffracting and sampling, and thus replicating image light within the OPE and diffracting additional beamlets towards the EPE **2440**. Although gratings are discussed as exemplary diffractive optical structures in some embodiments, it will be appreciated that the present invention is not limited to diffraction gratings and other diffractive structures (e.g., plurality of islands laid out in a hexagonal grid) can be included within the scope of the present invention.

[0304] It will thus be appreciated that according to some embodiments, any one portion of light can be diffracted a multitude of times by the first grating across the first area (e.g. the OPE **2430**), For example, and as explained below in relation to FIG. **30**C in greater detail, a periodic structure within the first grating can diffract a portion of the image light in a given direction (such as towards the EPE **2440**), while transmitting a remaining portion in a second direction. By progressively diffracting the light, the light can be thought of as "stair stepping" cloned beamlets (i.e., multiply or sample a portion of image light by diffraction) across the OPE **2430**. For example, each time a ray is diffracted while traveling in the substantially x-direction, some portion of the light can diffract toward the EPE **2440**. A portion of the diffracted light continues in the substantially x-direction through the OPE **2430** until it again diffracts a portion toward the EPE **2440** in the substantially y-direction, and a remaining portion continues in the substantially x-direction. In some embodiments, a central ray of the light can be incoupled into the waveguide by the ICG **2420** and be directed toward the OPE **2430**. While traveling in the OPE **2430**, the central ray may be diffracted at a right angle by the OPE **2430** and be directed toward the EPE **2440** (or, in other embodiments, be diffracted at an acute angle).

[0305] In some embodiments, the EPE **2440** can receive light from the OPE **2430**. In some embodiments, the second grating of the EPE **2440** can outcouple the light from the waveguide **2400** after such light has traveled in a substantially y-direction in relation to the OPE **2430**. In such embodiments, the light can be directed to an eye of a user such that the original projected image incoupled to the eyepiece appears as an enlarged pupil of the projector in a field of view of the user through an eyebox. In some embodiments, the first area and the second area can occupy separate areas of the waveguide **2400**.

[0306] FIG. **25** illustrates an example of an overlap topology for a waveguide **2500** according to an embodiment of the present invention. An overlapping arrangement, such as illustrated in FIG. **25** when EPE **2540** and OPE **2530** may share a similar region relative to an orthogonal view, permits smaller eyepieces, and fewer sampling instances to direct light to the user's eyebox in a distributed fashion (which may reduce light interference). One of skill in the art will appreciate other advantages. The waveguide **2500** can perform similar to the waveguide **2400**. For example, in some embodiments, the waveguide **2500** can include an ICG **2520**, an OPE **2530**, and an EPE **2540**, each coupled to a substrate **2502**. In some embodiments, a first region of the OPE **2530** can occupy a separate region of the waveguide **2500** than a first region of the EPE **2540**. In addition, a second region of the OPE **2530** can occupy an overlapped region of the waveguide **2500** that a second region of the EPE **2540** also occupies. In other words, a region of the OPE **2530** can share a region of the waveguide **2500** where the EPE **2540** is. In some embodiments, the region that the OPE **2530** and the EPE **2540** both occupy can be on different planes (e.g., different sides of the substrate **2502**). In some embodiments, the OPE **2530** can be on a first plane and the EPE **2540** can be on a second plane. In such embodiments, portions of the light can propagate through the OPE **2530** in the overlapped region while other portions of the light are transmitted out of the waveguide **2500** by the EPE **2540** in the same overlapped region.

[0307] In some embodiments, the light outcoupled from the waveguide **2500** can propagate along a transmission direction. The OPE **2530** can be disposed at a first position measured along the transmission direction. In addition, the EPE **2540** can be disposed at a second position measured along the transmission direction. In such embodiments, the second position measured along the transmission direction can be closer to an eye of a user than the first position measured along the transmission direction. In some embodiments, the first position of the OPE **2530** can be on a back side of the waveguide **2500**, that is, closer to the world side of the waveguide **2500**, and the second position of the EPE **2540** can be on a front side of the waveguide **2500**, the side closer to the eye of the user.

[0308] In some embodiments, the OPE **2530** can be on a front side of the waveguide **2500** and the EPE **2540** can be on a back side of the waveguide **2500**. For example, the light outcoupled from the waveguide **2500** can propagate along a transmission direction. The OPE **2530** can be disposed at a first position measured along the transmission direction. In addition, the EPE **2540** can be disposed at a second position measured along the transmission direction. In such embodi-

ments, the first position measured along the transmission direction can be closer to an eye of a user than the second position measured along the transmission direction.

[0309] In some embodiments, a planar waveguide layer can include a first pupil expander (e.g., an OPE) and a second pupil expander (e.g., an EPE). In such embodiments, a first plane of the first pupil expander can be parallel in a z-direction to a second plane of the second pupil expander. In such embodiments, a first region of the first plane can have a first grating disposed on the first region; and a second region of the second plane can have a second grating disposed on the second region. In such embodiments, the first region is configured to diffract light in an x-direction and/or y-direction using the first grating; and the second region is configured to outcouple light to an eye of a user using the second grating. In such embodiments, the first region can spatially overlap with the second region.

[0310] In the embodiments described in the preceding paragraph, the light outcoupled to the eye of the user can propagate along a transmission direction. In such an example, the first area of the planar waveguide layer can be disposed at a first position measured along the transmission direction. In addition, the second area of the planar waveguide layer can be disposed at a second position measured along the transmission direction. In such embodiments, the second position measured along the transmission direction can be closer to the eye of the user than the first position measured along the transmission direction as illustrated in FIG. **25**. In other embodiments, the first position measured along the transmission direction can be closer to the eye of the user than the second position measured along the transmission direction.

[0311] In the embodiments described above, the ICG **2520**, the OPE **2530**, and the EPE **2540** were not in line. For example, the OPE **2530** was displaced from the ICG **2520** in a first direction (e.g., substantially x-direction) while the EPE **2540** was displaced from the ICG **2520** in a second direction (e.g., a substantially y-direction) that is different from the first direction.

[0312] FIG. **26** illustrates an example of an in-line topology for a waveguide **2600** according to an embodiment of the present invention. In the in-line topology, the OPE **2630** and the EPE **2640** can both be displaced from the ICG **2620** in a first direction. In other words, rather than light ultimately flowing in a first direction on the OPE and a second direction on the EPE, the eyepiece can be structured such that the OPE feeds the EPE in the same direction as the light was originally diffracted into the planar waveguide (i.e., the substrate **2602**) by the ICG. In some embodiments, the light can still stair step through the OPE **2630**, as described above. In such embodiments, the EPE **2640** can receive light from the same direction as the light was originally going rather than at a right angle relative to how light entered an OPE.

[0313] In some embodiments, a planar waveguide layer can include an incoupling DOE (e.g., an ICG) configured to receive incoupled light. The planar waveguide layer can further include a first pupil expander and a second pupil expander. The first pupil expander can be configured to receive light from the incoupling DOE and to diffract light toward the second pupil expander. The second pupil expander can be configured to receive light from the first pupil expander and to outcouple light towards an eye of a user. In some embodiments, the planar waveguide layer can be configured for light to flow from the incoupling DOE to the first pupil expander in a first direction. In such embodiments, the planar waveguide layer can further be configured for light to flow from the first pupil expander to the second pupil expander in the first direction.

[0314] In some embodiments, a diffraction efficiency of the OPE **2630** can be configured such that light cannot just penetrate right through the OPE **2630** without any diffractive sampling (stair stepping effect), and configured to create a more uniform distribution of light in the x-direction that diffracts in a y-direction toward the EPE. In some embodiments, the OPE **2630** can have a variable diffraction efficiency based on a location of the grating relative to the proximity of the ICG **2620** to the OPE **2630**. For example, a low diffraction efficiency of portions of the OPE **2630** can be used closer to the ICG **2620** to direct portions of light towards the EPE **2640** but permit a substantial portion to traverse the OPE **2630** in a substantially x-direction before higher efficiency diffraction gratings further away from the ICG **2620** direct the light to the EPE **2640**. In such an example, the diffraction efficiency can then be varied across the OPE **2630** to ensure a balance and not all light diffracted into the planar waveguide by the ICG **2620** is immediately directed to the EPE **2640**, or that by the time light has reached the far end of the OPE **2630** by total internal reflection there is roughly the same amount of light as diffracted to the EPE **2640** by the OPE **2630** across the OPE **2630**.

[0315] FIG. **27** illustrates an example of an OPE **2730** with zones of varying diffraction efficiency according to an embodiment of the present invention. A first zone **2732** can have a diffraction efficiency of twenty percent. A second zone **2734** can have a diffraction efficiency of twenty-five percent. A third zone **2736** can have a diffraction efficiency of thirty-three percent. A fourth zone **2738** can have a diffraction efficiency of fifty percent. A fifth zone **2739** can have a diffraction efficiency of ninety-nine percent. As light propagates throughout the OPE **2730** and enters each zone, the diffraction efficiency will diffract a roughly equal amount of light towards the EPE **2740** in each zone, creating a balance across the OPE **2730**. If the diffraction efficiency were too high, for example if the first zone **2732** and the second zone **2734** had diffraction efficiencies of 80% each, then very little light would propagate in a substantially x-direction, and a resultant eyebox for a user to view content in would be very narrow as compared to an OPE with lower diffraction efficiencies across its breadth to permit more light to propagate before diffraction to an EPE for outcoupling. One of skill in the art will appreciate that similar varying diffraction efficiencies of an EPE will produce similar desirable effects for outcoupling light from the planar waveguide. One of skill in the art will further appreciate that the percentages listed are illustrative only, and diffraction efficiencies towards the OPE end closer to the ICG may need to be higher as the stair step effect will continue to diffract light away from the ICG, perhaps before reaching the EPE.

[0316] FIG. **28** illustrates an example of a tip and clip topology for a waveguide **2800** according to an embodiment of the present invention. While the waveguide **2800** can include similar components to waveguides described herein, a topology of the waveguide **2800** can be different. For example, one or more components of the waveguide **2800** can be tipped to follow an angle of the fanning of the light into the planar waveguide (i.e., the substrate **2802**), such that an edge of the fanning of light from incoupling grating **2820**

aligns with a common interface of first pupil expander **2830** and second pupil expander **2840**. For comparison, see FIG. **23** which depicts incoupling grating **2320** and resultant fan pattern **2324**, orthogonal pupil expander **2330** substantially follows the edges of the fan pattern in its own shape, but leaves a gap between orthogonal pupil expander **2330** and exit pupil expander **2340**. In the tip and clip topology of FIG. **28**, the gap of FIG. **23** is removed, and the respective pupil expanders may occupy less space, resulting in a smaller form factor. In some embodiments, the fanning (caused by a grating of an ICG **2820**) of the waveguide **2800** can be plus or minus 20 degrees in relation to the OPE **2830**. The fanning of the waveguide **2800** can be changed such that the fanning can be plus 30 degrees and minus zero degrees in relation to a first pupil expander **2830** (which may correspond to the OPE **2430** of FIG. **24**).

[0317] The first pupil expander **2830** can perform similarly to the OPE **2430** of FIG. **24**. In some embodiments, a first grating disposed within or on a planar surface of a planar waveguide associated with the first pupil expander **2830** can cause a light incoupled into the planar waveguide to be diffracted at an acute angle (in the x-y plane) so as to re-direct in a substantially y-direction towards second pupil expander **2840**. A person of ordinary skill in art will recognize that the topology of the waveguide **2800** can cause a plurality of rays multiplied from such central ray by the pupil expander to follow substantially similar paths as the rays of light depicted in FIG. **28**. A light path **2828** is illustrated in FIG. **28** to show a direction of a light beam that is incoupled into the waveguide **2800** by the ICG **2820**, an subsequently multiplied by the first pupil expander **2830** and then diffracted towards second pupil expander **2840**.

[0318] By changing the topology of the components of a waveguide, the waveguide **2800** can eliminate space included in the waveguide **2400** between the OPE **2430** and the EPE **2440**, as illustrated in FIG. **24**. In addition, a portion (i.e., removed area **2860**) of the first pupil expander **2830** can be removed (as compared to the OPE **2430** of FIG. **24**) to maximize weight and size of the eyepiece relative to marginal amount of light from removed area **2860** that would otherwise be diffracted to the second pupil expander **2840**.

[0319] In some embodiments, the second pupil expander **2840** can also be tilted to some degree. The second pupil expander **2840** can be tilted an amount independent of the amount the ICG **2820** and/or the first pupil expander **2830** are tilted. In some embodiments, the second pupil expander **2840** can include a portion identified as an eyebox. The eyebox can be where a user's field of view with respect to a particular eye of a user should be located relative to the waveguide. As described previously in this description, the x-axis of the eyebox's dimension in the x-direction is largely a function of the OPE and the amount of light that propagates the planar waveguide in a substantially x-direction, and the eyebox's dimension in the y-direction is largely a function of the EPE and the amount of light that propagates the planar waveguide in a substantially y-direction. One of skill in the art will appreciate the relevance and geometries of the eyebox as and if applied in any of the described waveguides throughout this description.

[0320] FIG. **29** illustrates an example of a bowtie topology for a waveguide **2900** according to an embodiment of the present invention. The waveguide **2900** may mitigate loss present in other waveguide designs by utilizing light that would typically be diffracted away from the pupil expanders. By orienting the ICG **2920** such that the resultant fan patterns are aligned with the y-axis and the x-axis (as shown in FIG. **29**), the waveguide **2900** can include a first pupil expander **2930**A and a second pupil expander **2930**B that capture much more diffracted incoupled light. In some embodiments, the first pupil expander **2930**A and the second pupil expander **2930**B can be OPEs. In some embodiments, the waveguide **2900** can further include a third pupil expander **2940**, such as an EPE.

[0321] The waveguide **2900** can reduce the size of a single OPE (such as those described above) because the waveguide **2900** can include two smaller pupil expanders (e.g., the first pupil expander **2930**A and the second pupil expander **2930**B). In some embodiments, the first pupil expander **2930**A and the second pupil expander **2930**B can be similar to an OPE with a portion removed (e.g., removed area **2932**A and **2932**B), as described above. The first pupil expander **2930**A and the second pupil expander **2930**B can mutiply light received and direct the light to the third pupil expander **2940** (as similarly described above). In some embodiments, the first pupil expander **2930**A and the second pupil expander **2930**B can direct the light at an angle in the x-y plane rather than in a generally x-direction, as described above. The angle can cause the first pupil expanders **2930**A and **2930**B to send light to the third pupil expander **2940** as illustrated by light path **2928**. In some embodiments, the waveguide **2900** can approximately double an efficiency compared to other waveguides described herein.

[0322] In some embodiments, the waveguide **2900** can further include one or more spreaders (e.g., spreader **2932**A and spreader **2932**B). The one or more spreaders can capture light that is transmitting from the ICG **2920** directly to a center of the third pupil expander **2940**. The one or more spreaders can include a grating similar to one or more OPEs described herein. In some embodiments, the grating of the one or more spreaders can similarly stair step the light to the third pupil expander **2940**.

[0323] In some embodiments, an eyepiece can include a planar waveguide layer. The planar waveguide layer can include a first pupil expander, a second pupil expander, and a third pupil expander. The first pupil expander can be configured to receive light from an incoupling DOE (e.g., ICG). In some embodiments, the first pupil expander can have a first grating configured to diffract light toward the third pupil expander. The second pupil expander can be configured to receive light from the incoupling DOE. In some embodiments, the second pupil expander can have a grating to diffract light toward the third pupil expander. The second pupil expander can be located on an opposite side of the incoupling DOE as the first pupil expander. In some embodiments, the third pupil expander can have a second grating. The third pupil expander can be configured to receive light from the first pupil expander and the second pupil expander. In some embodiments, the third pupil expander can also be configured to outcouple light to an eye of a user using the second grating. In some embodiments, the planar waveguide layer can further include a spreader configured to receive light from the incoupling DOE and to transmit light to an eyebox of the third pupil expander. In some embodiments, the spreader can have a third grating configured to diffract light a plurality of times before directing the light to the third pupil expander. In some embodi-

ments, the spreader cam be located on a different side of the incoupling DOE than the first pupil expander and the second pupil expander.

[0324] FIG. **30**A illustrates an example of a bowtie topology for a waveguide **3000** according to an embodiment of the present invention. The waveguide **3000** can include an input coupler region **3010** (including an ICG), an upper OPE region **3020**A, a lower OPE region **3020**B, and an EPE region **3030**. In some embodiments, the waveguide **3000** can also include an upper spreader region **3040**A and a lower spreader region **3040**B. The waveguide **3000** may be made of a substrate material that is at least partially transparent. For example, the waveguide **3000** can be made of a glass, plastic, polycarbonate, sapphire, etc. substrate **3002**. The selected material may have an index of refraction above 1, more preferably a relatively high index of refraction above 1.4, or more preferably above 1.6, or most preferably above 1.8 to facilitate light guiding. The thickness of the substrate **3002** may be, for example, 325 microns or less. Each of the described regions of the waveguide **3000** can be made by forming one or more diffractive structures on or within the waveguide substrate **3002**. The specific diffractive structures vary from region to region.

[0325] As shown in FIG. **30**A, light rays **3024**A and **3024**B respectively illustrate the paths along which input rays corresponding to the four corners of an input image projected at the 9 o'clock position of the input coupler region **3010** are re-directed toward the upper OPE region **3020**A and the lower OPE region **3020**B. Similarly, light rays **3026**A and **3026**B respectively illustrate the paths along which input rays corresponding to the four corners of input imagery projected at the 3 o'clock position of the input coupler region **3010** are re-directed toward the upper OPE region **3020**A and the lower OPE region **3020**B.

[0326] FIG. **30**B illustrates various magnified views of diffractive optical features for the waveguide **3000** according to an embodiment of the present invention. The diffractive optical features of the waveguide **3000** cause imagery projected into the eyepiece at the input coupler region **3010** to propagate through the waveguide **3000** and to be projected out toward the user's eye from the EPE region **3030**. Generally speaking, imagery is projected into the waveguide **3000** via rays of light which travel approximately along the illustrated z-axis and are incident on the input coupler region **3010** from outside of the substrate **3002**. The input coupler region **3010** includes diffractive optical features which redirect the input rays of light such that they propagate inside the substrate **3002** of the waveguide **3000** via total internal reflection. In some embodiments, the input coupler region **3010** is symmetrically located between upper and lower OPE regions **3020**. The input coupler region **3010** may divide and redirect the input light towards both of these OPE regions **3020**.

[0327] The OPE regions **3020** include diffractive optical features which perform at least two functions: first, they divide each input ray of light into a plurality of many spaced apart parallel rays; second, they redirect this plurality of rays of light on a path generally toward the EPE region **3030**. The EPE region **3030** likewise includes diffractive optical features. The diffractive optical features of the EPE region **3030** redirect the rays of light coming from the OPE regions **3020** such that they exit the substrate **3002** of the waveguide **3000** and propagate toward the user's eye. The diffractive optical features of the EPE region **3030** may also impart a degree of optical power to the exiting beams of light to make them appear as if they originate from a desired depth plane, as discussed elsewhere herein. The waveguide **3000** has the property that the angle of exit at which light rays are output by the EPE region **3030** is uniquely correlated with the angle of entrance of the corresponding input ray at the input coupler region **3010**, thereby allowing the eye to faithfully reproduce the input imagery.

[0328] The optical operation of the waveguide **3000** will now be described in more detail. First, VR/AR/MR imagery is projected into the waveguide **3000** at the input coupler region **3010** from one or more input devices. The input device can be, for example, a spatial light modulator projector (located in front of, or behind, the waveguide **3000** with respect to the user's face), a fiber scanning projector, or the like. In some embodiments, the input device may use liquid crystal display (LCD), liquid crystal on silicon (LCoS), or fiber scanned display (FSD) technology, though others can also be used. The input device can project one or more rays of light onto a sub-portion of the input coupler region **3010**.

[0329] A different sub-portion of the input coupler region **3010** can be used to input imagery for each of the multiple stacked waveguides that make up the eyepiece. This can be accomplished by, for each waveguide **3000**, providing appropriate diffractive optical features at a sub-portion of the input coupler region **3010** which has been set aside for inputting imagery into that waveguide **3000** of the eyepiece. These sub-portions can be referred to as separated pupils for incoupling light at a particular wavelength and/or depth plane. For example, one waveguide **3000** may have diffractive features provided in the center of its input coupler region **3010**, while others may have diffractive features provided at the periphery of their respective input coupler regions at, for example, the 3 o'clock or 9 o'clock positions. Thus, the input imagery intended for each waveguide **3000** can be aimed by the projector at the corresponding portion of the input coupler region **3010** such that the correct imagery is directed into the correct waveguide **3000** without being directed into the other waveguides.

[0330] The projector may be provided such that the input rays of light approach the input coupler region **3010** of a substrate **3002** generally along the illustrated z-direction (though there is typically some angular deviation, given that light rays corresponding to different points of an input image will be projected at different angles). The input coupler region **3010** of any given substrate **3002** includes diffractive optical features which redirect the input rays of light at appropriate angles to propagate within the substrate **3002** of the waveguide **3000** via total internal reflection. As shown by magnified view **3012**, in some embodiments the diffractive optical features of the input coupler region **3010** may form a diffraction grating made up of many lines which extend horizontally in the illustrated x-direction and periodically repeat vertically in the illustrated y-direction. In some embodiments, the lines may be etched into the substrate **3002** of the waveguide **3000** and/or they may be formed of material deposited onto the substrate **3002**. For example, the input coupler grating may comprise lines etched into the back surface of the substrate (opposite the side where input light rays enter) and then covered with sputtered-on reflective material, such as metal. In such embodiments, the input coupler grating acts in reflection mode, though other designs can use a transmission mode.

The input coupler grating can be any of several types, including a surface relief grating, binary surface relief structures, a volume holographic optical element (VHOE), a switchable polymer dispersed liquid crystal grating, etc. The period, duty cycle, depth, profile, etc. of the lines can be selected based on the wavelength of light for which the substrate/waveguide is designed, the desired diffractive efficiency of the grating, and other factors.

[0331] Input light which is incident upon this input coupler diffraction grating is split and redirected both upward in the +y-direction toward the upper OPE region **3020**A and downward in the −y-direction toward the lower OPE region **3020**B. Specifically, the input light which is incident upon the diffraction grating of the input coupler region **3010** is separated into positive and negative diffractive orders, with the positive diffractive orders being directed upward toward the upper OPE region **3020**A and the negative diffractive orders being directed downward toward the lower OPE region **3020**B, or vice versa. In some embodiments, the diffraction grating at the input coupler region **3010** is designed to primarily couple input light into the +1 and −1 diffractive orders. (The diffraction grating can be designed so as to reduce or eliminate the 0th diffractive order and higher diffractive orders beyond the first diffractive orders. This can be accomplished by appropriately shaping the profile of each line.)

[0332] The upper OPE region **3020**A and the lower OPE region **3020**B also include diffractive optical features. In some embodiments, these diffractive optical features are lines formed on or within the substrate **3002** of the waveguide **3000**. The period, duty cycle, depth, profile, etc. of the lines can be selected based on the wavelength of light for which the substrate/waveguide is designed, the desired diffractive efficiency of the grating, and other factors. The specific shapes of the OPE regions **3020**A and **3020**B can vary, but in general may be determined based on what is needed to accommodate rays of light corresponding to the corners of the input imagery, and all the rays of light in between, so as to provide a full view of the input imagery.

[0333] As described previously, one purpose of these diffraction gratings in the OPE regions **3020**A and **3020**B is to split each input light ray into a plurality of multiple spaced apart parallel light rays. This can be accomplished by designing the OPE diffraction gratings to have relatively low diffractive efficiency such that each grating line re-directs only a desired portion of a light ray while the remaining portion continues to propagate in the same direction. (One parameter which can be used to influence the diffractive efficiency of the grating is the etch depth of the lines.) Another purpose of the diffraction gratings in the OPE regions **3020**A, **3020**B is to direct those light rays along a path generally toward the EPE region **3030**. That is, every time a light ray is incident upon a line of the OPE diffraction grating, a portion of it will be deflected toward the EPE region **3030** while the remaining portion will continue to transmit within the OPE region to the next line, where another portion is deflected toward the EPE region and so on. In this way, each input light ray is divided into multiple parallel light rays which are directed along a path generally toward the EPE region **3030**. This is illustrated in FIG. **30**C.

[0334] The orientation of the OPE diffraction gratings can be slanted with respect to light rays arriving from the input coupler region **3010** so as to deflect those light rays generally toward the EPE region **3030**. The specific angle of the slant may depend upon the layout of the various regions of the waveguide **3000**. In the embodiment illustrated in FIG. **30**B, the upper OPE region **3020**A extends in the +y-direction, while the lower OPE region **3020**B extends in the −y-direction, such that they are oriented 180° apart. Meanwhile, the EPE region **3030** is located at 90° with respect to the axis of the OPE regions **3020**A and **3020**B. Therefore, in order to re-direct light from the OPE regions **3020**A and **3020**B toward the EPE region **3030**, the diffraction gratings of the OPE regions may be oriented at about +/−45° with respect to the illustrated x-axis. Specifically, as shown by magnified view **3022**A, the diffraction grating of the upper OPE region **3020**A may consist of lines oriented at approximately +45° to the x-axis. Meanwhile, as shown by the magnified view **3022**B, the diffraction grating of the lower OPE region **3020**B may consist of lines oriented at approximately −45° to the x-axis.

[0335] FIG. **30**C illustrates the optical operation of the stair step effect in the OPE regions for the waveguide **3000** according to an embodiment of the present invention. The OPE regions shown in FIG. **30**C may correspond to the OPE regions of FIGS. **30**A and **30**B. As illustrated, an input ray **3011** enters the upper OPE region **3020**A from the input coupler region **3010**. Each input ray **3011** propagates through the waveguide **3000** via total internal reflection, repeatedly reflecting between the top and bottom surfaces of the substrate **3002**. When the input ray **3011** is incident upon one of the lines **3028** depicting a periodic structure of the diffraction grating formed in the upper OPE region **3020**A, a portion of the ray is directed toward the EPE region **3030**, while another portion of the ray continues along the same path through the OPE region **3020**A. This occurs at each line of the diffraction grating, which results in each input ray **3011** being sampled into a plurality of rays or beamlets of the original light. The paths of some of these rays are indicated in FIG. **30**C by arrows.

[0336] With reference back to FIG. **30**B, in some embodiments it may be advantageous that the input coupler region **3010** be located between two OPE regions because this allows the waveguide **3000** to efficiently make use of light from positive and negative diffractive orders from the input coupler region **3010**, as one OPE region receives positive diffractive orders and the other OPE region receives negative diffractive orders from the input coupler region **3010**. The light from the positive and negative diffractive orders can then be recombined at the EPE region **3030** and directed to the user's eye. Although the position of the input coupler region **3010** between the upper and lower OPE regions **3020**A and **3020**B is advantageous in this regard, it can result in the input coupler region **3010** effectively shadowing the central portion of the EPE region **3030**. That is, because input rays are separated into positive and negative diffractive orders by the input coupler and are first directed in the +y-direction or the −y-direction before being redirected in the +x-direction toward the EPE region **3030**, fewer light rays may reach the central portion of the EPE region which is located directly to the left of the input coupler region **3010** in FIGS. **30**A and **30**B. This may be undesirable because if the center of the EPE region **3030** is aligned with the user's eye, then fewer light rays may ultimately be directed to the user's eye due to this shadowing effect which is caused by the position of the input coupler region **3010** between the OPE regions **3020**. As a solution to this problem, the waveguide **3000** may also include upper and lower spreader

regions **3040**A and **3040**B. These spreader regions can re-direct light rays from the OPE regions so as to fill in the central portion of the EPE region **3030**. The upper and lower spreader regions **3040**A and **3040**B accomplish this task with diffractive features which are illustrated in FIG. **30**B.

[0337] As shown in magnified view **3042**A, the upper spreader region **3040**A can include a diffraction grating whose grating lines are formed at approximately −45° to the x-axis, orthogonal to the grating lines in the neighboring upper OPE region **3020**A from which the upper spreader region **3040**A primarily receives light. Like the OPE gratings, the efficiency of the gratings in the spreader regions can be designed such that only a portion of the light rays incident on each line of the grating is re-directed. Due to the orientation of the diffraction grating lines in the upper spreader region **3040**A, light rays from the upper OPE region **3020**A are re-directed somewhat in the −y-direction before continuing on in the +x-direction toward the EPE region **3030**. Thus, the upper spreader region **3040**A helps to increase the number of light rays which reach the central portion of the EPE region **3030**, notwithstanding any shadowing caused by the position of the input coupler region **3010** with respect to the EPE region **3030**. Similarly, as shown in magnified view **3042**B, the lower spreader region **3040**B can include grating lines which are formed at approximately +45° to the x-axis, orthogonal to the grating lines in the neighboring lower OPE region **3020**B from which the lower spreader region **3040**B primarily receives light. The diffraction grating lines in the lower spreader region **3040**B cause light rays from the lower OPE region **3020**B to be re-directed somewhat in the +y-direction before continuing on in the +x-direction toward the EPE region **3030**. Thus, the lower spreader region **3040**B also helps to increase the number of light rays which reach the central portion of the EPE region **3030**.

[0338] Light rays from the OPE regions **3020**A and **3020**B and the spreader regions **3040**A and **3040**B propagate through the substrate **3002** of the waveguide **3000** until ultimately reaching the EPE region **3030**. The EPE region **3030** can include diffractive optical features which redirect the light rays out of the waveguide **3000** and toward the user's eye. As shown in magnified view **3032**, the diffractive optical features of the EPE region **3030** can be vertical grating lines which extend in the y-direction and exhibit periodicity in the x-direction. Alternatively, as shown in FIG. **31**A, the lines of the diffraction grating in the EPE region **3030** can be somewhat curved in order to impart optical power to the imagery. The period, duty cycle, depth, profile, etc. of the lines can be selected based on the wavelength of light for which the substrate/waveguide is designed, the desired diffractive efficiency of the grating, and other factors. A portion of the light rays which are incident on each of these grating lines in the EPE region **3030** is re-directed out of the substrate **3002** of the waveguide **3000**. The specific angle at which each output ray exits the EPE region **3030** of the waveguide **3000** is determined by the angle of incidence of the corresponding input ray at the input coupler region **3010**.

[0339] FIG. **31**A illustrates an example of a waveguide **3100** which includes an input coupler region **3110** having two superimposed diffraction gratings according to an embodiment of the present invention. The waveguide **3100** is formed with a substrate **3102** and includes the input coupler region **3110**, an upper OPE region **3120**A, a lower OPE region **3120**B, and an EPE region **3130**. Except where noted otherwise, the waveguide **3100** can function similarly to the waveguide **3000** illustrated in FIGS. **30**A-**30**C. The design of the waveguide **3100** represents another way to increase the amount of light that is directed toward the central portion of the EPE region **3130** (located directly to the left of the input coupler region **3110**) without necessarily using the types of spreader regions **3040**A and **3040**B discussed with respect to FIGS. **30**A-**30**C.

[0340] A principal difference between the waveguide **3100** in FIG. **31**A as compared to the waveguide **3000** in FIGS. **30**A, **30**B, and **30**C is the design of the input coupler region **3110**. In the waveguide **3000**, the input coupler region **3010** was designed so as to re-direct input light primarily to the upper and lower OPE regions **3020**A and **3020**B. In contrast, the input coupler region **3110** shown in FIG. **31**A is designed to direct input light both to the upper and lower OPE regions **3120**A and **3120**B and directly to the EPE region **3130**. This can be accomplished by superimposing two diffraction gratings on one another in the input coupler region **3110**.

[0341] FIG. **31**B illustrates a perspective view of an example of an input coupler region **3110** made up of two superimposed diffraction gratings according to an embodiment of the present invention. The first diffraction grating **3141** can be formed similarly to the one illustrated with respect to FIGS. **30**A-**30**C. Specifically, it can consist of lines extending in the x-direction and repeating periodically in the y-direction such that the two superimposed diffraction gratings are orthogonal to each other. This first diffraction grating **3141** splits input light into positive and negative diffractive orders which are respectively directed toward the upper and lower OPE regions **3120**A and **3120**B. The first diffraction grating **3141** can have a first diffractive efficiency to control the proportion of input light which it re-directs toward the OPE regions **3120**A and **3120**B.

[0342] The second diffraction grating **3142** can consist of lines extending in the y-direction and repeating periodically in the x-direction. In other words, the second diffraction grating **1342** can be oriented at approximately 90° to the first diffraction grating. This orientation of the second diffraction grating **1342** causes input rays of light to be re-directed toward the EPE region **3130**, which in this embodiment is located in a direction substantially 90° from the directions in which the OPE regions **3120**A and **3120**B are located with respect to the input coupler region **3110**, without first passing through the OPE regions. (The second diffraction grating **3142** could also have other orientations depending on the direction in which the EPE region **3130** is located in other embodiments.) The second diffraction grating **3142** can be designed to have a second diffractive efficiency which may be different from the first diffraction efficiency. In some embodiments, the second diffraction grating **3142** can be designed to be less efficient than the first diffraction grating **3141**. This can be accomplished by, for example, making the lines of the second diffraction grating **3142** shallower than those of the first diffraction grating, as shown in FIG. **31**B, causing most of the input light to be re-directed toward the upper and lower OPE regions **3120**A and **3120**B by the first diffraction grating **3141** (represented by light rays **3112**A and **3112**B, respectively), while a lesser portion of the input light is re-directed directly toward the EPE region **3130** by the second diffraction grating **3142** (represented by light ray **3114**). Because the input coupler region **3110** re-directs some of the input light directly toward the EPE region **3130**,

the afore-described shadowing of the central portion of the EPE region by the input coupler region can be reduced.

[0343] FIG. **32**A illustrates an example of a waveguide **3200** having a compact form factor by angling the upper and lower OPE regions toward the EPE region according to an embodiment of the present invention. The waveguide **3200** is formed with a substrate **3202** and includes an input coupler region **3210**, an upper OPE region **3220**A, a lower OPE region **3220**B, and an EPE region **3230**. Except where noted otherwise, the waveguide **3200** shown in FIG. **32**A can function similarly to the waveguide illustrated in FIGS. **30**A-**30**C.

[0344] A principal difference between the waveguide **3200** in FIG. **32**A as compared to the waveguide **3000** in FIGS. **30**A-**30**C is that the OPE regions **3220**A and **3220**B are angled toward the EPE region **3230**. In the embodiment shown in FIG. **32**A, each OPE region is tilted from the y-axis by about 30 degrees. Thus, rather than being separated by about 180 degrees, as in the embodiment illustrated in FIGS. **30**A-**30**C, the upper OPE region **3220**A and the lower OPE region **3220**B are separated by about 120 degrees. For example, the input coupler region **3210** may be configured to diffract the incoupled light related to the projected image into the substrate **3202** in multiple directions, including a first direction (upward, 30 degrees from the y-axis), a second direction (downward, 30 degrees from the y-axis), and a third direction (in the +x-direction). In some embodiments, the first direction forms a 120 degree angle with the second direction. In some embodiments, the third direction forms a 60 degree angle with each of the first direction and the second direction. While the precise amount of angling of the OPE regions **3220**A and **3220**B toward the EPE region **3230** can vary, in general such angling may allow the waveguide **3200** to achieve a more compact design. This can be advantageous because it may allow the head-mounted display of a VR/AR/MR system to be made less bulky.

[0345] The design of the diffractive features in the input coupler region **3210** can be modified so as to match the angles at which input rays of light are transmitted into the substrate **3202** of the waveguide **3200** such that they correspond with the directions in which the OPE regions **3220**A and **3220**B are located with respect to the input coupler region **3210**. An example embodiment of the diffractive features of the input coupler region **3210** is shown in the magnified view **3212** in FIG. **32**B.

[0346] FIG. **32**B illustrates an example of the diffractive optical features of the input coupler region **3210** of the waveguide **3200** shown in FIG. **32**A according to an embodiment of the present invention. In the illustrated embodiment, the input coupler region **3210** has a plurality of islands **3214** laid out in a hexagonal grid **3216** (note that the dashed lines around each island **3214** are intended to illustrate the hexagonal grid, not necessarily to correspond to any physical structure along the dashed lines). The hexagonal grid **3216** of the diffractive features causes the input rays of light that are incident on the input coupler region **3210** to be transmitted into the substrate **3202** of the waveguide **3200** in multiple directions at 60 degree intervals. Thus, as shown in FIG. **32**A, a first set of input rays are launched towards the upper OPE region **3220**A at approximately 60 degrees to the x-axis, a second set of input rays are launched toward the lower OPE region **3220**B at approximately −60 degrees to the x-axis, and a third set of input rays are launched directly toward the EPE region **3230** generally along the x-axis.

[0347] Other tessellated configurations can also be used, depending on the shape of the waveguide **3200** and the direction(s) from the input coupler region **3210** to the OPE region(s) **3220**. The specific shape of the islands **3214** determines the efficiency with which light is re-directed into each of these directions. In the illustrated embodiment, each of the islands **3214** is a rhombus, but other shapes are also possible (e.g., circle, square, rectangle, etc.). In addition, the islands **3214** can be single or multi-leveled. In some embodiments, the diffractive features of the input coupler region **3210** are formed by etching the islands **3214** into the back surface of the substrate **3202** (on the opposite side from where input rays enter the substrate **3202** from an input device). The etched islands on the back surface of the substrate **3202** can then be coated with and then adding a reflective material. In this way, input rays of light enter the front surface of the substrate and reflect/diffract from the etched islands on the back surface to the surface of the substrate such that the diffractive features operate in a reflection mode. The upper OPE region **3220**A and the lower OPE region **3220**B may include diffractive optical features as described previously. The diffractive features of the upper OPE region **3220**A are illustrated in magnified view **3222** in FIG. **32**C.

[0348] FIG. **32**C illustrates an example of the diffractive optical features of the OPE region **3220**A of the waveguide **3200** shown in FIG. **32**A according to an embodiment of the present invention. As was the case with the diffractive features of the OPE regions of the waveguide **3000**, the diffractive features of the OPE regions **3220**A and **3220**B of the waveguide **3200** shown in FIG. **32**A are likewise a periodically repeating pattern of lines which form a diffraction grating. In this case, however, the angle at which the lines are oriented has been adjusted in view of the slanted orientation of the OPE region **3220**A so as to still re-direct rays of light toward the EPE region **3230**. Specifically, the lines of the diffraction grating in the upper OPE region **3220**A are oriented at approximately +30 degrees with respect to the x-axis. Similarly, the lines of the diffraction grating in the lower OPE region **3220**B are oriented at approximately −30 degrees with respect to the x-axis.

[0349] FIG. **33**A illustrates an example of a waveguide **3300** having a combined OPE/EPE region **3350** in a single-sided configuration according to an embodiment of the present invention. The combined OPE/EPE region **3350** includes gratings corresponding to both an OPE and an EPE that spatially overlap in the x-direction and the y-direction. In some embodiments, the gratings corresponding to both the OPE and the EPE are located on the same side of a substrate **3302** such that either the OPE gratings are superimposed onto the EPE gratings or the EPE gratings are superimposed onto the OPE gratings (or both). In other embodiments, the OPE gratings are located on the opposite side of the substrate **3302** from the EPE gratings such that the gratings spatially overlap in the x-direction and the y-direction but are separated from each other in the z-direction (i.e., in different planes). Thus, the combined OPE/EPE region **3350** can be implemented in either a single-sided configuration or in a two-sided configuration. One embodiment of the two-sided configuration is shown in reference to FIGS. **34**A and **34**B.

[0350] FIG. **33**B illustrates an example of the combined OPE/EPE region **3350** in a single-sided configuration, captured by a scanning electron microscope (SEM) according to an embodiment of the present invention. The combined OPE/EPE region **3350** may include three sets of gratings: a first OPE grating **3351**, a second OPE grating **3352**, and an EPE grating **3353**. By superimposing the three sets of gratings onto each other, the three sets of gratings are integrated together to form a 3D grating nanostructure with herringbone ridges. The parallel lines displayed in FIG. **33**B show the periodicity of the three sets of gratings. In some embodiments, the three sets of gratings are generated using an interference lithography technique on the substrate **3302**. In some instances, the three sets of gratings are generated sequentially. For example, using interference lithography, the first OPE grating **3351** may be generated first. After completion of the first OPE grating **3351**, the second OPE grating **3352** may be generated using interference lithography directly on top of the finished first OPE grating **3351**. Finally, after completion of the second OPE grating **3352**, the EPE grating **3353** may be generated using interference lithography. In this manner, the three sets of gratings may be superimposed onto each other. In some embodiments, performance of the combined OPE/EPE region **3350** is improved by generating the EPE grating **3353** after completion of the first OPE grating **3351** and the second OPE grating **3352**, thereby retaining most of the functionality of the EPE grating **3353**.

[0351] In some embodiments, the three sets of gratings are all generated simultaneously during a single processing using interference lithography. For example, prior to performing interference lithography, the desired grating structure may be computed using a computational device. The desired grating structure may include a sum or average of the three sets of gratings. After computing the desired grating structure, interference lithography may be used to generated the desired grating structure onto the substrate **3302**. In this manner, the three sets of gratings may be superimposed onto each other. In some embodiments, performance of the combined OPE/EPE region **3350** is improved by first generating a combination of the first OPE grating **3351** and the second OPE grating **3352** using the described technique, and then subsequently generating the EPE grating **3353** after completion of the combined OPE gratings, thereby retaining most of the functionality of the EPE grating **3353**. In some embodiments, performance of the combined OPE/EPE region **3350** is improved by increasing the minima and maxima of the EPE grating **3353** toward the edges of the combined OPE/EPE region **3350**, thereby increasing the probability of outcoupling light along the edges of the combined OPE/EPE region **3350**.

[0352] Although not shown in FIG. **33**B, in some embodiments the combined OPE/EPE region **3350** includes diffractive mirrors along the edges of the combined OPE/EPE region **3350** (e.g., along the four sides). The diffractive mirrors may include a series of very fine pitch gratings for diffracting the light backwards back into the combined OPE/EPE region **3350**, causing light that would otherwise exit the waveguide **3300** to continue to propagate within the waveguide **3300**. Inclusion of one or more diffractive mirrors increases waveguide efficiency and improves coherent light artifacts by creating a more random array of exit pupils. As will be evident to one of skill in the art, the present invention is not limited to the superposition of three grating structures, for example other numbers of grating or other diffractive structures can be superimposed. One of ordinary skill in the art would recognize many variations, modifications, and alternatives.

[0353] FIG. **33**C illustrates an example of the light path **3328** within the waveguide **3300** according to an embodiment of the present invention. The light path **3328** includes an incident light (denoted as **3328**A) that is coupled into the substrate **3302** at the ICG **3320**. The incoupled light (denoted as **3328**B) propagates toward the gratings **3351**, **3352**, and **3353** by total internal reflection. When these rays encounter the first OPE grating **3351**, light is diffracted in the +y-direction (denoted as **3328**C) and is subsequently diffracted in the −z-direction (denoted as **3328**D) by the EPE grating **3353** out of the waveguide **3300** toward the user's eye. Similarly, the incoupled light (denoted as **3328**B) may alternatively encounter the second OPE grating **3352** and be diffracted in the −y-direction (denoted as **3328**E). Light that is diffracted in the −y-direction (denoted as **3328**E) may be diffracted by the EPE grating **3353** out of the waveguide **3300** toward the user's eye. Whether light is diffracted in the +y-direction (by the first OPE grating **3351**) or in the −y-direction (by the second OPE grating **3352**) is probabilistic and is governed by the grating structures. In general, performance of the combined OPE/EPE region **3350** is improved when the incoupled light (denoted as **3328**B) has a 50% chance of diffracting in either the +y-direction or the −y-direction. In some instances, this is achieved when the first OPE grating **3351** and the second OPE grating **3352** are perpendicular to each other.

[0354] Although waveguide **3300** is illustrated as having only a single ICG **3320**, in some embodiments it may be preferable for waveguide **3300** to include a second ICG on the opposite side of the combined OPE/EPE region **3350** as the ICG **3320**. The second ICG may be identical in form and function as the ICG **3320** and may be a mirrored version of the ICG **3320**. For example, whereas the ICG **3320** is configured to diffract an incoupled light related to a projected image into the substrate **3302**, the second ICG **3320** may be configured to diffract an incoupled light related to a mirrored version of the projected image (e.g., flipped in the x-direction). In contrast to the light path **3328** associated with the ICG **3320**, the light path associated with the second ICG may include an incident light that is coupled into the substrate **3302** at the second ICG. The incoupled light propagates toward the gratings **3351**, **3352**, and **3353** by total internal reflection. When these rays encounter the first OPE grating **3351**, light is diffracted in the −y-direction and is subsequently diffracted in the −z-direction by the EPE grating **3353** out of the waveguide **3300** toward the user's eye. Similarly, the incoupled light may alternatively encounter the second OPE grating **3352** and be diffracted in the +y-direction. Light that is diffracted in the +y-direction may be diffracted by the EPE grating **3353** out of the waveguide **3300** toward the user's eye.

[0355] FIG. **33**D illustrates a side view of the example of the light path **3328** within the waveguide **3300** shown in FIG. **33**C according to an embodiment of the present invention. As the incoupled light (denoted as **3328**B) propagates toward the gratings **3351**, **3352**, and **3353**, it may reflect multiple times off of one or both of the bottom side and the top side of the substrate **3302** or other waveguide elements.

[0356] FIG. **34**A illustrates an example of a waveguide **3400** having a combined OPE/EPE region **3450** in a two-

sided configuration according to an embodiment of the present invention. The waveguide **3400** may differ from the waveguide **3300** shown in reference to FIGS. **33**A-**33**D in that the three sets of gratings in the combined OPE/EPE region **3450** (a first OPE grating **3451**, a second OPE grating **3452**, and an EPE grating **3453**) are distributed between the two sides of the substrate **3402**. For example, in some embodiments, the combined OPE/EPE region **3450** includes an OPE component **3450**A and an EPE component **3450**B such that the OPE component **3450**A (including the OPE gratings) is located on one side of the substrate **3402** and the EPE component **3450**B (including the EPE gratings) is located on the other side of the substrate **3402**. The OPE component **3450**A may be generated using interference lithography by generating the two sets of OPE gratings (the first OPE grating **3451** and the second OPE grating **3452**) sequentially or by generating the two sets of OPE gratings simultaneously, similar to the technique described in reference to the waveguide **3300**.

[0357] An example of a light path **3428** within the waveguide **3400** is shown in reference to FIG. **34**A. The light path **3428** includes an incident light (denoted as **3428**A) that is coupled into the substrate **3402** at the ICG **3420**. The incoupled light (denoted as **3428**B) propagates toward the gratings **3451**, **3452**, and **3453** by total internal reflection. When these rays encounter the first OPE grating **3451**, light is diffracted in the +y-direction (denoted as **3428**C) and is subsequently diffracted in the −z-direction (denoted as **3428**D) by the EPE grating **3453** out of the waveguide **3400** toward the user's eye. Similarly, the incoupled light (denoted as **3428**B) may alternatively or additionally encounter the second OPE grating **3452** and be diffracted in the −y-direction (denoted as **3428**E). Light that is diffracted in the −y-direction (denoted as **3428**E) may be diffracted by the EPE grating **3453** out of the waveguide **3400** toward the user's eye.

[0358] FIG. **34**B illustrates a side view of the waveguide **3400** and the light path **3428** shown in FIG. **34**A according to an embodiment of the present invention. In some embodiments, the first OPE grating **3451** and the second OPE grating **3452** are disposed on or within the same side of the substrate **3402** such that they are superimposed onto each other, forming a 2D grating on one side of the substrate **3402**. In some embodiments, the EPE grating **3453** is disposed on the opposite side of the substrate **3402**, forming a 1D grating. As the incoupled light (denoted as **3428**B) propagates toward the gratings **3451**, **3452**, and **3453**, it may reflect multiple times off of one or both of the bottom side and the top side of the substrate **3402**. In some instances, when the rays of the incoupled light are diffracted in the +y-direction by the first OPE grating **3451** and in the −y-direction by the second OPE grating **3452**, they may propagate across the substrate **3402** in the −z-direction (as shown by paths **3428**C and **3428**E, respectively).

[0359] FIGS. **35**A-**35**J illustrate various designs of waveguides **3500** for implementation in an eyepiece according to an embodiment of the present invention. Each of the waveguides **3500** may be similar to one or more embodiments described herein, and may include, for example, one or more ICGs **3520**, one or more OPEs **3530**, an EPE **3540**, and/or a combined OPE/EPE region **3550**. For example, the waveguides **3500**A, **3500**B, and **3500**C (illustrated in FIGS. **35**A, **35**B, and **35**C, respectively) each include a single ICG **3520** positioned vertically above and to the side of the EPE **3540** such that the OPE **3530** diffracts light at an angle toward the EPE **3540**. In the waveguide **3500**A, the OPE **3530**A may partially overlap the EPE **3540**A, whereas the OPE may not overlap the EPE in the waveguides **3500**B and **3500**C. The waveguides **3500**D, **3500**E, and **3500**F (illustrated in FIGS. **35**D, **35**E, and **35**F) each include two ICGs **3520** positioned vertically above and to each of the two sides of the EPE **3540**, and also include two OPEs **3530** positioned along the two sides of the EPE **3540**. The OPEs **3530** may each diffract the incoupled light inward toward the EPE **3540**. The waveguide **3500**E may correspond to a cropped version of the waveguide **3500**D.

[0360] The waveguide **3500**G (illustrated in FIG. **35**G) may include a single ICG **3520**G positioned laterally to the side of a combined OPE/EPE region **3550**G, similar to the waveguide **3300** described in reference FIGS. **33**A-**33**D and/or the waveguide **3400** described in reference to FIGS. **34**A and **34**B. The waveguides **3500**H and **3500**I (illustrated in FIGS. **35**H and **351**, respectively) each include a single ICG **3520** positioned vertically above the EPE **3540** and two OPEs **3530** positioned vertically above and to the sides of the EPE **3540**. The waveguide **3500**I may correspond to a cropped version of the waveguide **3500**H. The waveguide **3500**J (illustrated in FIG. **35**J) may include a single ICG **3520**J positioned vertically above a combined OPE/EPE region **3550**J, similar to the waveguide **3300** described in reference FIGS. **33**A-**33**D and/or the waveguide **3400** described in reference to FIGS. **34**A and **34**B, with a rotation by 90 degrees.

Optical Systems

[0361] An image projector is an optical device that may project an image (or moving images) for a user to view. Recently, innovations have allowed a head-mounted device (i.e., a near-to-eye display device) to include an image projector. Such image projectors can project images to the eyes of a user wearing the head-mounted device. However, such head-mounted devices may cause wave interference-based image artifacts and patterns.

[0362] FIG. **37** shows an example optical system **3700** using diffractive structures, e.g., diffraction gratings on or in a substrate, e.g., a waveguide. The optical system **3700** can be used for virtual and augmented reality applications. In some implementations, the optical system **3700** has an eyepiece including an in-coupling grating (ICG) element **3702** and a diffractive optical element (DOE) **3704**. The eyepiece can be implemented as described in U.S. patent application Ser. No. 14/726,424, entitled "Methods and systems for generating virtual content display with a virtual or augmented reality apparatus", filed on May 29, 2015, which is hereby incorporated by reference in its entirety.

[0363] The ICG **3702** and DOE **3704** can be implemented in or on a substrate **3710**. The substrate **3710** can be made of glass, polymer, or crystal. In some cases, the substrate **3710** is transparent. In some cases, the substrate **3710** can be also semi-transparent. In some implementations, the substrate **3710** includes a slab waveguide. The waveguide can be made of material with a refractive index within a range from about 1.5 to 4. The waveguide can have a thickness of about 100 nm to 1 mm. The waveguide can have any suitable two-dimensional top-view shape, e.g., rectangular, square, circular, or elliptical.

[0364] The DOE **3704** can have one or more layers, and each layer can include an orthogonal pupil expansion (OPE)

diffractive element **3706** and an exit pupil expansion (EPE) diffractive element **3708**. The ICG element **3702** is configured to receive input light beams, e.g., from a projector, and transmit the input light beams to the DOE **3704** in the substrate **3710**. As noted above, the substrate **3710** can include a waveguide, and the ICG element **3702** transmits the input light beams into the waveguide that is coupled to the DOE **3704**.

[0365] In some examples, the input light beams have the following properties: 1) a finite beam with an FWHM (full-width-at-half-maximum) of about 200 nm to 2 mm; 2) a wavelength within a range of about 400 nm to 2 μm; 3) an incident polar angle that enables the input light beams to be totally-internally-reflected inside the waveguide. The polar angle can be within a range from about 35 to 89 degrees; and/or **4**) an azimuthal angle that enables the input light beams to propagate within a range from −30 to 30 degrees in the waveguide.

[0366] The input light beams can travel in the waveguide by total internal reflection (TIR). The OPE diffractive element **3706** on a layer is configured to deflect some of the input light beams to the EPE diffractive element **3708** that is configured to in turn deflect some of the deflected light beams out of the substrate **3710**, e.g., toward a user's eye(s). To get an output image with uniform luminance in the user's eye(s), multiple output deflected light beams from the EPE diffractive element **3708** may have uniform intensity.

[0367] The OPE diffractive element **3706** and the EPE diffractive element **3708** can be arranged in co-planar or side-by-side on the same layer. To get light beams out of the substrate, the DOE **3704** is configured to diffract the light beams across the DOE **3704**, e.g., with selective distributions of diffraction. In some embodiments, the distribution of diffracted light is substantially uniform. In some embodiments, the amount of diffracted light is variable across a profile of the DOE **3704**, e.g., in an increasing gradient or randomized fashion. For example, as the intensity of the light beams decreases when the light beams propagate in the DOE **3704** and are gradually deflected by the OPE diffractive element **3706** and the EPE diffractive element **3708**, the diffractive efficiency of the DOE **3704** can be configured to gradually increase along the propagation path of the light beams.

[0368] In some implementations, the OPE diffractive element **3706** includes a first diffraction grating positioned along a first direction, e.g., from bottom to top, as shown in FIG. **37**. The EPE diffractive element **3708** includes a second diffraction grating positioned along a second direction, e.g., from left to right, as shown in FIG. **37**. An angle between the first direction and the second direction can be within a range of 0 to 90 degree. In some cases, the angle is between 45 degree and 90 degree. In some cases, the angle is between 80 degree and 90 degree. In a particular example, the second direction is perpendicular to the first direction. The first diffraction grating can be a diffraction grating with linearly varying depths along the first direction, thus the first diffraction grating can have a gradually increasing diffraction efficiency along the first direction. The second diffraction grating can be a diffraction grating with linearly varying depths along the second direction, thus the second diffraction grating can have a gradually increasing diffraction efficiency along the second direction.

[0369] In some implementations, the OPE diffractive element **3706** and the EPE diffractive element **3708** include linear diffractive structures, circular diffractive structures, radially symmetric diffractive structures, or any combination thereof. The OPE diffractive element **3706** and the EPE diffractive element **3708** can include both the linear grating structures and the circular or radially symmetric diffractive elements to both deflect and focus light beams.

[0370] The diffractive structures in the DOE **3704** can have periods within a range of from about 50 nm to 500 nm. In some examples, the diffractive structures have periodic oscillation of refractive index that has a dielectric index contrast between 0.1 and 3. In some examples, the diffractive structures can be made of a dielectric material with a periodic metal pattern. The dielectric material can have a refractive index of about 1.5 to 4. In some implementations, the diffractive optical element (DOE) **3704** including the OPE diffractive element **3706** and the EPE diffractive element **3708** has an area of region from about 0.1 mm^2 to 1 m^2, which can be used for any suitable size display system such as a smaller display system or a larger display system.

[0371] As noted above, to get an output image with uniform luminance in the user's eye(s) or other viewing screens, multiple output deflected light beams from the EPE diffractive element **3708** may need to have uniform intensity. The OPE diffractive element **3706** can include a first diffractive structure having a first periodic structure configured to deflect an input light beam propagating in the substrate **3710** into a plurality of output light beams. The output light beams are deflected out of the OPE diffractive element **3706** at respective positions that are spaced from each other. Each of the spaced output light beams can be a result of an interference among multiple coincident light beams that are generated from the input light beam and deflected by the first diffractive structure out from the OPE diffraction element **3706** at the respective position. The output light beams from the OPE diffractive element **3706** are spaced from each other and thus do not interfere with each other. The spaced output light beams enter into the EPE diffractive element **3708** and are further deflected by a second diffractive structure in the EPE diffractive element **3708** and out of the substrate **3710** from respective positions that are also spaced from each other. Thus, the output light beams from the EPE diffractive element **908** are also at different positions in space and incoherent with each other. Accordingly, there is no interference among these output light beams from the EPE diffractive element **3708**. Therefore, the properties of the output light beams from the EPE diffractive element **3708** can substantially depend on the properties of the output light beams from the OPE diffractive element **3708**.

[0372] In some implementations, diffractive structures in the OPE diffractive element **3706** have a periodic structure which may manipulate amplitudes of output diffracted light beams, without manipulating phases of the output diffracted light beams, e.g., as illustrated in FIGS. **43** and **44**A. In these cases, for each of the output light beam, there may exist constructive interference or destructive interference among the respective multiple coincident light beams forming the output light beam.

Dithering

[0373] A diffractive waveguide may include uniform gratings in the OPE. An ideal output image has constant luminance. Because the gratings in the OPE are uniform, however, the actual output image may have non-uniform luminance.

[0374] FIG. **38** illustrates simulated electric field intensities in the exit pupil expander (EPE) exhibiting wave interference caused by uniform grating in the OPE. Electric field intensity **3805** is observed as a result of a thin waveguide and an OPE designed for large field-of-view (e.g., 40 degrees by 40 degrees). As can be seen from electric field intensity **3805**, bad luminance artifacts can be observed, as well as strong wave interference. Electric field intensity **3810** is observed as a result of a thick waveguide and an OPE designed for large field-of-view. The thick waveguide exhibits weak wave interference. Electric field intensity **3815** is observed as a result of a thin waveguide and an OPE designed for small field-of-view (e.g., 5 degrees by 5 degrees). The thin waveguide exhibits strong wave interference. Electric field intensity **3820** is observed as a result of a thick waveguide and an OPE designed for small field-of-view. The thick waveguide exhibits weak wave interference.

[0375] The simulated results in FIG. **38** show that using thinner waveguide as the substrate causes stronger wave interference than using thicker waveguide. The simulated results in FIG. **38** also show that an OPE diffractive element designed for a larger FOV, e.g., a longer width along Y axis, causes stronger wave interference than an OPE diffractive element designed for a smaller FOV, e.g., a shorter width along Y axis. The OPE designed for larger FOV with thinner waveguide as the substrate causes the strongest wave interference among the four scenarios shown in FIG. **38**. A strong wave interference in the electric field intensity can cause luminance artifacts or non-uniformity on a viewing screen, e.g., a user's eye(s), which may affect the performance of the optical system. In other words, the wave interference problem is worst in large field-of-view, ultra-thin displays, which are most desirable for see-through mixed-reality displays.

[0376] The wave interference may be decreased, and luminance uniformity of the output image may be increased, for example, by creating patterns in the grating on the waveguide. These patterns improve diffusion of light, thus increasing uniformity in the output image. For example, a beam splitter may be used to split a laser beam into two component beams while preserving path length. If the two component beams are recombined, destructive interference results and the two beams cancel each other out. This approach may be used to create a luminance modulator. However, by even making a very subtle change in the path length of one laser beam with respect to the other, the two beams can be brought into perfect phase, or 90 degrees out of phase so that they cancel each other out.

[0377] A Mach-Zehnder interferometer manipulates the path length of one beam to vary the intensity of the output beam (i.e., the recombined beam). With uniform 45 degree grating, the OPE acts as a Mach-Zehnder structure because the rays are stair stepping through the OPE and propagating along the OPE. In other words, a plurality of cloned beams are created that all have a phase relationship to one another, and that all came from the same original emitter. An arbitrary beam that is flowing down into the EPE from the OPE is actually a composite of multiple diffracted beams that have come to that point through independent paths. Some of the beams have stair stepped through the OPE, and some of them have gone straight across the OPE and taken a right angle turn downward. Those beams are recombining as they propagate downward.

[0378] One method of breaking up the symmetry of the OPE is to dither the OPE structure itself. One exemplary dither is a sinusoidal dither of the structure across space. A structured variation may be created by changing the etch depth of the OPE so that at the low points, the etch depth would be very narrow, and at the high points, there would be full etch depth, thus increasing the fraction efficiency.

[0379] For illustration purposes only, in the following, examples of phase perturbation methods by adding phase variation patterns to diffractive structures, e.g., diffraction gratings, of the OPE diffractive element are illustrated to improve luminance uniformity and/or eliminate luminance artifacts for the optical system. The phase variation patterns have periods substantially larger than periods of the OPE gratings. For example, the periods of the OPE gratings can be within a range from about 50 nm to 500 nm, and the periods of the phase variation patterns can be within a range from about 100 μm to 5 cm in some embodiments.

[0380] FIG. **39**A illustrates an undithered OPE **3905**A and the output image **3910**A from the undithered OPE **3905**A. The output image **3910**A has a fair amount of nonuniformity including some odd striation patterns. Ideally, the output image should be uniform. FIG. **39**B illustrates an OPE with a sinusoidal dither **3905**B and the output image **3910**B from the dithered OPE **3905**B. The output image **3910**B has improved luminance uniformity. FIG. **39**C illustrates an OPE with an a semi-randomized (e.g., optimized) 2D dither **3905**C and the output image **3910**C from the dithered OPE **3910**C. The output image **3910**C also has increased overall luminance uniformity. FIG. **39**D illustrates that if the viewer is well-centered within the eyebox, then the viewer will not observe any or a reduced number of artifacts associated with the dither. In some embodiments, the dither may be selected considering a trade-off between luminance uniformity and final sharpness of the image, as well as contrast efficiency.

[0381] FIG. **40**A shows an example of adding continuous phase variation patterns to a diffractive structure, e.g., a diffraction grating, of the OPE diffractive element, that is, an OPE grating **4000**A. The OPE grating **4000**A has a periodic structure longitudinally extending along a first direction. Pattern **4002**A is an example continuous phase variation pattern that has a periodic pattern longitudinally extending along a second direction. There is an angle between the first direction and the second direction. When the phase variation pattern **4002**A is added to the OPE grating **4000**A, the OPE grating **4000**A becomes grating **4004**A that has a wave-like grating shape and is different from the OPE grating **4000**A.

[0382] Pattern **4006**A is another example continuous phase variation pattern that has a periodic pattern longitudinally extending along a third direction. The third direction is substantially parallel to the first direction. When the phase variation pattern **4006**A is added to the OPE grating **4000**A, the OPE grating **4000**A becomes grating **4008**A that has a modulated grating structure and is different from the OPE grating **4000**A.

[0383] FIG. **40**B illustrates, at top, an undithered OPE **4005**B and the output image **4010**B from the undithered OPE **4005**B. The undithered OPE **4005**B may have, for example, a binary multi-level grating. The output image **4010**B has strong low-frequency artifacts and/or luminance non-uniformity.

[0384] FIG. **40**B illustrates, at bottom, a dithered OPE **4015**B and the output image **4020**B from the dithered OPE **4015**B. The dithered OPE **4015**B has low frequency spatial variation of grating angle (i.e., rotation of the grating as opposed to tilt) and pitch. Thus, the output image **4020**B has

less low frequency artifacts and the luminance uniformity is substantially improved when the phase modulated, dithered OPE **4015**B is implemented in the optical system.

[0385] FIG. **40**C shows an example of adding discrete phase variation pattern **4002**C to a diffractive structure, e.g., a diffraction grating, of the OPE diffractive element, that is, the OPE grating. When the discrete phase variation pattern **4002**C is added to the OPE grating, the OPE grating becomes grating **4004**C that has a changed structure and is different from the periodic structure of the OPE grating **4000**A.

[0386] Image **4006**C shows the output image from the optical system having the OPE grating without phase variation, while image **4008**C shows the output image from the optical system having the modulated OPE grating **4004**C with phase variation. The two images show that low-frequency artifacts can be substantially removed or eliminated by adding phase variation to the periodic structure of the OPE grating and luminance uniformity can be also substantially improved.

[0387] In some implementations, the OPE diffractive element includes a phase-dithered grating. The EPE diffractive element can also include a phase-dithered grating. In some implementations, phase perturbations or variation methods, e.g., those for the OPE diffractive element, are also implemented in diffractive structures of the EPE diffractive element to improve luminance uniformity and/or eliminate luminance artifacts for the optical system.

Exemplary Phase Variation Patterns

[0388] Phase variations (or perturbations) within diffractive regions (e.g., a periodic structure) of a diffractive structure, e.g., a diffractive beam multiplier or a diffraction grating, can be achieved by implementing a phase variation pattern into the diffractive regions of the diffractive structure. As discussed in further detail herein, the phase variation pattern can be designed or determined based on properties and/or performance of the diffractive structure. The phase variation pattern can have a substantially larger period than a period of the diffractive structure. In some examples, a diffraction grating has a grating period within a range from about 50 nm to 500 nm, while the phase variation pattern has a period within a range from about 100 pm to 5 cm.

[0389] FIG. **41**A illustrates slow variation patterns that may be used to create dithering in grating structures according to some embodiments of the invention. Slow variation may be, for example, 20 nm variation over 1 mm, or variation less than 0.02%. Variation pattern **4105**A illustrates periodic dithering in a grating structure that includes alternating pairs of first and second portions that cause different phase variations or perturbations on the periodic structures. Each pair has the same periods. The first and second portions can have the same width and/or length. Variation pattern **4110**A illustrates graded periodic dithering in a grating structure. Compared to variation pattern **4105**A, the phase variation in variation pattern **4110**A has an increased period along a direction, e.g., from left to right. Variation pattern **4115**A illustrates computationally optimized dithering in a grating structure. Different portions of the pattern may cause different phase variations or perturbations on the periodic structures. This pattern can be designed and/or generated by phase attributable algorithms or computational holography. In some examples, the optimized phase variation pattern is a computational hologram. Variation pattern **4120**A illustrates random dithering in a grating structure. The random pattern can be designed and/or generated by random algorithms. The random pattern can act as a diffuser.

[0390] FIGS. **41**B-C illustrate different types of discrete phase variation patterns that can be implemented in diffractive structures to cause phase variations or perturbations on part of periodic structures of the diffractive structures, thereby affecting phase shifts of light beams diffracted by the part of the periodic structures. Different from continuous phase variation patterns, the discrete phase variation patterns include portions that cause no phase variation or perturbation on some part of the periodic structure and portions that cause phase perturbation on the other part of the periodic structure.

[0391] FIG. **41**B shows an example discrete phase variation pattern **4100**B that includes first pattern portions **4102**B and second pattern portions **4104**B and a blank portion **4106**B. The first pattern portions **4102**B and second pattern portions **4104**B can cause phase perturbations on the periodic structure, while the blank portions **4106**B cause no phase perturbation on the periodic structure. Each of the first pattern portions **4102**B can be discrete or separated from each other, each of the second pattern portions **4104**B can be discrete or separated from each other. Each of the first pattern portions **4102**B can be separated from each of the second pattern portions **4104**B.

[0392] FIG. **41**C shows another example discrete phase variation pattern **4150**C that includes a plurality of discrete pattern portions **4152**C and one or more blank portions **4154**C. The discrete pattern portions **4152**C can include different or same sizes of circles or other shapes that can cause phase perturbations on the periodic structure.

[0393] Besides implementing a phase variation pattern into a periodic structure of a diffractive structure, phase variations or perturbations within the periodic structure of the diffractive structure can be also achieved by other phase variation methods. These methods can be used individually or in any suitable combinations with each other and/or with any suitable phase variation pattern to implement the phase variations or perturbations on the periodic structure of the diffractive structure.

[0394] In some implementations, freeform diffractive lens are used for the diffractive structure, e.g., positioned before and/or after the diffractive structure or within the diffractive structure. The diffractive lens can include small angular variations, e.g., up to ±⅓ degree, and/or small pitch variations, e.g., up to ±1%, which may cause phase perturbations on light beams diffracted by the periodic structure of the diffractive structure.

[0395] In some implementations, direct modification of periodic structures of the diffractive structure is used to generate phase perturbations on the periodic structure. FIG. **42**A shows various phase variation methods by changing periodic structures of example diffraction gratings. The diffraction gratings referenced by **4205**A, **4210**A, **4215**A, **4220**A, and **4225**A can be binary gratings, and the diffraction grating referenced by **4230**A can be a non-binary grating.

[0396] Variation pattern **4205**A illustrates variation in grating duty cycle. Variation pattern **4205**A may be created, for example, according to a geometric file in which each line is treated as a polygon. Variations of the duty cycles can be within 1 to 99%, in some embodiments. Variation pattern **4210**A illustrates variation in grating height. The grating

heights may vary from 10 to 200 nm, in some embodiments. Variation pattern **4210**A may be created, for example, by using a variable etch rate, variable doping, and/or a variable resist height on top of the grating. Variation pattern **4215**A illustrates variation in refractive index within the grating. The refractive index may vary from 1.5 to 4, in some embodiments. Variation pattern **4215**A may be created, for example, with consecutive deposition of materials with different refractive indexes. Variation pattern **4220**A illustrates underlying thin-film thickness variation on a substrate. The underlying thin film may be arranged (positioned or fabricated) between the diffraction grating and the substrate. The thin film can have a refractive index, e.g., within a range of 1.5 to 4. The thickness of the thin film along the diffraction grating may vary within 1 nm to 10 μm, in some embodiments. Variation pattern **4225**A illustrates thin-film variation on the backside of a substrate in which grating on the front is uniform. The thin film can have a refractive index, e.g., within a range of 1.5 to 4. The thickness of the thin film along the diffraction grating may vary within 1 nm to 10 μm, in some embodiments. Variation pattern **4220**A and/or variation pattern **4225**A may be created, for example, by inkjet deposition of a polymer on a wafer. Variation pattern **4230**A illustrates variation in blaze or apex angle (i.e., tilting the grating), pitches, and/or widths of the grating. Variation pattern **4230**A may be a non-binary grating. Variation pattern **4230**A may be created, for example, by masking out portions of the wafer and etching the remaining portions at various angles across the wafer. In some examples, a diffraction grating includes a periodic structure, and a phase variation pattern of the diffraction grating can be based on a variation of a pitch of the periodic structure or a variation of a grating vector angle of the periodic structure.

[0397] FIG. **42**B shows an example method of fabricating a diffraction grating with varying grating heights to implement phase variations or perturbations in a periodic structure of the diffraction grating. In some examples, the fabrication method includes a multi-height level manufacturing method. A large number (N) of height levels (N) in the diffraction grating can be achieved with a limited number (n) of lithography steps with $N=2^n$. Other methods can be also used to create multiple levels of heights.

[0398] As shown in FIG. **42**B, **4** different height levels in the grating can be achieved with 2 lithography steps: first, a first patterned protective layer is formed on a substrate; second, a first layer of material is selectively deposited on unprotected areas on the substrate to form a grating structure; third, the first patterned protective layer is removed; fourth, a second patterned protective layer is formed on the substrate and the grating structure; fifth, a second layer of material is selectively deposited on unprotected areas; sixth, the second patterned protective layer is removed to get a diffraction grating with 4 height levels.

[0399] FIG. **42**C is a flow diagram **4200**C of an example method of fabricating a diffractive structure with a phase variation pattern. The diffractive structure can be a diffraction grating or a diffractive beam multiplier. The diffractive structure can be applied in a display system or optical system. The phase variation pattern can be like the phase variation patterns shown and described herein.

[0400] The method comprises determining a phase variation pattern for the diffractive structure (**4202**C). The diffractive structure may have a periodic structure configured to deflect an input light beam into a plurality of output light beams. Each output light beam may be a result of an interference among multiple coincident light beams that are generated from the input light beam and deflected by the diffractive structure. The phase variation pattern may have a period that is substantially larger than a period of the periodic structure. The phase variation pattern may be configured to cause phase perturbations on the periodic structure, such that, for each of the output light beams, the interference among the multiple coincident light beams can be leveraged and at least an optical power or a phase of the output light beam can be adjusted.

[0401] In some implementations, determining a phase variation pattern for a diffractive structure may include designing the phase variation pattern based on one or more properties of the diffractive structure. The one or more properties of the diffractive structure may include the period of the periodic structure, a duty cycle, a height of the periodic structure, a blazed or apex angle, and/or interference pattern of output light beams from the periodic structure. By phase attributable algorithms or computational holography, the pattern variation pattern may be designed or determined, such that artifacts, e.g., low frequency artifacts, in the wave in the interference pattern can be mitigated or eliminated.

[0402] In some implementations, the diffractive structure may include a first diffractive portion and a second diffractive portion adjacent to the first diffractive portion. The first diffractive portion may be configured to cause a first light beam to diffract with a first phase shift at a first diffraction order, and the second diffractive portion is configured to cause a second light beam to diffract with a second phase shift at a second diffraction order. The second diffraction order may be the same as the first diffraction order, but the second phase shift is different from the first phase shift. A difference between the first phase shift and the second phase shift may be associated with the phase variation pattern.

[0403] In some implementations, the first diffractive portion may be configured to deflect the first light beam into a first diffracted light beam at the first diffraction order. The second diffractive portion may be configured to deflect the first diffracted light beam into a second diffracted light beam at a negative order of the second diffraction order, and the second diffracted light beam may have a phase change compared to the first light beam, the phase change being the first phase shift minus the second phase shift.

[0404] In some examples, the period of the periodic structure may be within a range from 50 nm to 500 nm, and the period of the phase variation pattern may be within a range from 100 μm to 5 cm.

[0405] In some examples, the phase variation pattern may be designed to be a continuous phase variation pattern. The continuous phase variation pattern can include at least one of: a periodic or graded periodic pattern, a heuristic pattern, a computational hologram, or a random pattern like a diffuser.

[0406] In some examples, the phase variation pattern may be designed to be a discrete phase variation pattern. The discrete phase variation pattern may include at least a first portion and a second portion. The first portion may be configured to cause phase perturbations on the periodic structure, and the second portion may be configured to cause no phase perturbations on the periodic structure.

[0407] In some examples, the phase variation pattern may be designed to be based on at least one of: a variation of a

pitch of the periodic structure, a variation of a grating vector angle of the periodic structure, a variation of a duty cycle of the periodic structure, a height variation of the periodic structure, a refractive index variation of the periodic structure, or a blaze or apex angle variation of the periodic structure.

[0408] The method further comprises fabricating the diffractive structure with the determined phase variation pattern in or on a substrate (**4204**C). The fabrication method may include lithography, holography, nanoimprinting, and/or other suitable methods.

[0409] In some embodiments, the fabricated diffractive structure may be tested. For example, an input light may be injected onto the fabricated diffractive structure and output light beams can be displayed on a viewing screen. Based on the properties of interference patterns of the output light beams, e.g., whether or not there exists low frequency artifacts, the phase variation pattern can be redesigned. The process can return to step **4202**C in some embodiments.

[0410] In some implementations, the method may include fabricating a waveguide as the substrate. The waveguide may be configured to guide the input light beam via total internal reflection into the diffractive structure. The waveguide may be a slab waveguide and can have a thickness within a range from 100 nm to 1 mm. The waveguide may be made of transparent glass, polymer, or crystal.

[0411] In some implementations, the method may further include fabricating a second diffractive structure having a second periodic structure in or on the substrate. The second diffractive structure is configured to deflect the plurality of output light beams from the diffractive structure out of the substrate. The diffractive structure can be an OPE diffractive element, and the second diffractive structure may be an EPE diffractive element. The phase variation pattern of the diffractive structure can be designed or determined such that the plurality of output light beams from the diffractive structure and consequently out from the second diffractive structure have equal optical powers.

[0412] In some cases, the substrate including the fabricated first diffractive structure and the fabricated second diffractive structure may be tested to determine actual properties of the output light beams that are consequently out from the second diffractive structure. A new phase variation pattern may be determined for the diffractive structure based on one or more properties of the actual output light beams.

[0413] FIG. **42**D is a flow diagram **4200**D of an exemplary method of manipulating light by a dithered eyepiece layer according to some embodiments of the present invention. The method includes receiving light from a light source at an input coupling grating having a first grating structure characterized by a first set of grating parameters at an input coupling grating (**4210**D).

[0414] The method further comprises receiving light from the input coupling grating at an expansion grating having a second grating structure characterized by a second set of grating parameters varying in at least two dimensions (**4220**D). In some embodiments, the at least two dimensions includes at least two of pitch, apex angle, refractive index, height, and duty cycle. In some embodiments, the second grating structure has a phase variation pattern. In some embodiments, a period of the phase variation pattern is within a range from 100 μm to 5 cm. In some embodiments, the phase variation pattern comprises a continuous phase variation pattern that includes at least one of a periodic or graded periodic pattern, a heuristic pattern, a computational hologram, and a random pattern. In some embodiments, the second grating structure has a periodic structure. In some embodiments, a period of the periodic structure is within a range from 50 nm to 500 nm. In some embodiments, the second grating structure includes a phase-dithered grating.

[0415] In some embodiments, the second grating structure comprises a first diffractive portion and a second diffractive portion adjacent to the first diffractive portion, wherein the first diffractive portion is configured to cause a first light beam to diffract with a first phase shift at a first diffraction order, wherein the second diffractive portion is configured to cause a second light beam to diffract with a second phase shift at a second diffraction order, wherein the second diffraction order is similar to the first diffraction order, and wherein the second phase shift is different than the first phase shift, and wherein a difference between the first phase shift and the second phase shift is associated with the phase variation pattern. In some embodiments, the first diffractive portion is configured to deflect the first light beam into a first diffracted light beam at the first diffraction order, wherein the second diffractive portion is configured to deflect the first diffracted light beam into a second diffracted light beam at a negative order of the second diffraction order, and wherein the second diffracted light beam has a phase change as compared to the first light beam, the phase change being the first phase shift minus the second phase shift.

[0416] The method further comprises receiving light from the expansion grating at an output coupling grating having a third grating structure characterized by a third set of grating parameters (**4230**D). The method further comprises outputting light to a viewer (**4240**D).

[0417] FIGS. **43**-**45** further explain embodiments of the invention from a high level. FIG. **43** is a simplified diagram illustrating a diffractive beam multiplier in a waveguide. Light **4310** is input as a collimated beam that is totally internally reflected inside the waveguide. The input light **4310** enters a diffractive structure **4320**, and is output **4330** as multiple copies of the input beam. There is a 1-to-1 transfer function of the input angle to output angle.

[0418] The diffractive structure **4320** has a periodic structure defining a plurality of portions P**1**, P**2**, . . . , Pn that are adjacent together. The portions S**1**-Sn can have a tilted angle over a longitudinal direction of the diffraction grating **4320**. In some implementations, the waveguide is made of a material having an index, e.g., n=1.5 to 4, higher than an index of air, e.g., n=1. The waveguide can have a thickness of 100 nm to 1 mm. The diffraction grating **4320** can have a period of 50 nm to 500 nm.

[0419] The device of FIG. **43** can be operated in air. An input light beam **4310**, e.g., a collimated light beam from a laser source, can propagate from the air into the waveguide. The input light beam **4310** can travel within the waveguide, e.g., via total internal reflection (TIR). When the input light beam **4310** travels through the diffraction grating **4320**, the input light beam **4310** can be deflected (e.g., split and diffracted) by the portions P**1**, P**2**, . . . , Pn of the diffraction grating **4320**. At each portion, the input light beam **4310** can be split and diffracted into different orders of diffracted light beams, e.g., 0, +1, +2. The 0th order diffracted light beam of the input light **4310** can be further deflected by sequential portions along the longitudinal direction. The higher-order,

e.g., +1 or −1 order, diffracted light beam of the input light beam can be diffracted out of the periodic structure of the diffraction grating **4320**.

[0420] FIG. **44**A is a simplified diagram illustrating the paths of light through a beam multiplier that manipulates diffraction efficiency. Input light **4410**A is sent through a diffractive component **4420**A that manipulates amplitude, resulting in output light **4430**A that includes multiple copies of the input light **4410**A.

[0421] FIG. **44**A illustrates how a diffraction grating **4420**A with a periodic structure manipulates an amplitude of a diffracted light beam. An input light **4410**A is deflected at portions of the diffraction grating **4420**A. As FIG. **44**A shows, for each unit cell, e.g., at each portion, assuming that the electric field amplitude of the input light Ein is 1 and the portion of the grating has a diffraction efficiency d, the higher-order diffracted light beam has an amplitude E_{out}=d, and the 0th order diffracted light beam has an amplitude E_{out}=1−d. In a system like this, there are no wave interference effects in producing the output copies of the input light beam **4410**A.

[0422] In the present disclosure, a diffractive structure is presented that can manipulate both amplitude and phase of an input light, thereby manipulating wave interference of output light beams. The diffractive structure can have a phase variation pattern over a periodic structure of the diffractive structure. The phase variation pattern can have a period that is substantially larger than a period of the periodic structure, such that properties of the periodic structure have no or minor change but artifacts or non-uniformity in the wave interference pattern can be substantially reduced or eliminated.

[0423] FIG. **44**B is a simplified diagram illustrating the paths of light through a beam multiplier that manipulates wave interference according to some embodiments of the invention. Input light **4410**B is sent through a diffractive component **4420**B that manipulates amplitude and phase, resulting in output light **4430**B that includes multiple copies of the input light.

[0424] FIG. **44**B illustrates how a diffraction grating **4420**B manipulates both amplitude and phase of a diffracted light beam. As shown in FIG. **44**B, an input light beam **4410**B can be deflected (e.g., split and diffracted) at first sub-sections of the diffraction grating **4420**B along a first direction into first deflected (or diffracted) light beams. The first sub-sections are configured to cause different phase shifts among the first deflected light beams. Then the first deflected light beam at each first sub-section can be further deflected at second sub-sections of the diffraction grating along a second direction into second deflected light beams. The second sub-sections are configured to cause different phase shifts among the second deflected light beams. The second direction can be perpendicular to the first direction. The second deflected light beams can be further deflected at other sub-sections of the diffraction grating **4420**B. Eventually, a plurality of output light beams **4430**B are deflected out of the diffractive structure **4420**B from respective positions that are spaced from each other. Each output light beam **4430**B can be a result of an interference among multiple coincident light beams that are generated from the input light beam **4410**B and deflected by the diffraction grating **4420**B. That is, each output light beam **4430**B can be the superposition of multiple coincident light beams from a number of pathways through repeated diffraction events in the grating **4420**B.

[0425] FIG. **44**B shows an optical transformation function of one unit cell of a Mach-Zender-like interference which can mathematically describe how optical phase can affect the output light beam amplitude. As an example shown in FIG. **44**B, each unit cell of the diffraction grating includes four sub-sections S**11**, S**12**, S**21**, and S**22**. Each sub-section may have identical grating pitch and angle, but diffracts light with different amplitudes and phase shifts.

[0426] An input light beam is deflected at the four sub-sections S**11**, S**12**, S**21**, and S**22** into four light beams. Two light beams are coincident and form an output light beam, e.g., the output light beam. Each of the light beams experiences a different light path. For example, the input light beam is first deflected at sub-section S**11** into a first 0th order light beam and a first higher order diffracted light beam. The first 0th order light beam is further deflected at sub-section S**12** to form a second higher order diffracted light beam that is further deflected at sub-section S**22** into a third higher order diffracted light beam and a third 0th order light beam. The first higher order diffracted light beam is further deflected at sub-section S**21** to form a fourth higher order diffracted light beam that is further deflected at sub-section S**22** into a fifth 0th order light beam **352** and a fifth higher order diffracted light beam.

[0427] Assuming that the electric field of the input light has an input amplitude Ein=1 and an input phase φ_0=0, the electric fields of the four output light beams can be $E_1e^{i\varphi_1}$, $E_2e^{i\varphi_2}$, $E_3e^{i\varphi_3}$, and $E_4e^{i\varphi_4}$, respectively, where E_1, E_2, E_3, and E_4 are the amplitudes of the output light beams, and φ_1, φ_2, φ_3, and φ_4 are the phases of the output light beams, which are also the phase changes of the four different light paths. A first output light including two of the diffracted light beams has an electric field $E_{out}=E_1e^{i\varphi_1}+E_2e^{i\varphi_2}$, and a second output light including the other two of the diffracted light beams has an electric field $E_{out}=E_3e^{i\varphi_3}+E_4e^{i\varphi_4}$. Thus, controlling phase shifts of sub-sections within the diffraction grating, e.g., by engineering phase variations of the periodic structure of the diffraction grating, enables controlling amplitudes and phases of the diffracted light beams and accordingly the interference among the multiple diffracted light beams that are coincident can be leveraged and an optical power and/or a phase of the output light can be controlled or adjusted.

[0428] FIGS. **45**A-B show examples of simple phase variation patterns in one unit cell. FIG. **45**A shows an example phase variation pattern that produces zero relative phase difference between coincident output beams. FIG. **45**B shows an example phase variation pattern that produces a non-zero phase different between two coincident output light beams that interfere with each other. Thus, FIG. **45**B shows how phase variations of a grating structure can controllably manipulate the amplitude of output light beams.

[0429] A phase-dithered grating can cause no phase shift for diffracted light with 0th order, a positive phase shift for diffracted light with a positive order, and a negative phase shift for diffracted light with a negative order. For example, as FIG. **45**A shows, one unit cell **4500**A of the grating can include a first grating portion **4510**A and a second grating portion **4520**A adjacent to the first grating portion **4510**A. Sub-sections within the first grating portion **4510**A are configured to cause 0, $+\varphi_1$ $-\varphi_1$ phase shifts for 0th order,

positive order, and negative order, respectively. Subsections within the second grating portion **4520**A are configured to cause 0, $+\varphi_2$, $-\varphi_2$ phase shifts for 0th order, positive order, and negative order, respectively. Due to dithering, the first grating portion **4510**A and the second grating portion **4520**A have phase variations, where phase shift φ_1 is not identical to phase shift φ_2.

[0430] An input light **4501**A can be normally incident on the unit cell **4500**A and can be deflected by a sub-section in the first grating portion **4510**A into a diffracted beam **4502**A with zero phase change at 0th order and diffracted beam **4505**A with $+\varphi_1$ phase change at a positive order. Diffracted beam **4502**A is further deflected at a sub-section in the first grating portion **4510**A to get diffraction beam **4503**A with $+\varphi_1$ phase change. Diffraction beam **4503**A is further deflected at a subsection in the second grating portion **4510**A to get diffraction beam **404** with φ_2 phase change. Assuming the input light **4501**A has an input phase being 0, diffraction beam **4504**A has a phase change φ_1-φ_2 compared to the input light **4501**A, thus having an output phase φ_1-φ_2. Similarly, diffraction beam **4505**A is deflected by a sub-section in the second grating portion **4520**A to get diffraction beam **4506**A with φ_2 phase change. Diffraction beam **4506**A is deflected by a sub-section to get diffraction beam **4507**A with zero phase change. Thus, diffraction beam **4507**A also has a phase change φ_1-φ_2 compared to the input light **4501**A, thus having an output phase φ_1-φ_2, same as diffraction beam **4505**A. That is, the phase difference between the diffraction beams **4504**A and **4507**A $\Delta\varphi$ is 0.

[0431] FIG. **45**B is a simplified diagram illustrating the paths of light through a correctly dithered grating structure according to some embodiments of the invention. In FIG. **45**B, symmetry is broken and output is changed. The outputs are nonzero and controllable. In this embodiment, engineered phase perturbations within the diffractive region allows for controllable constructive or destructive interference, which controls the output luminance of the output ports.

[0432] FIG. **45**B shows another unit cell **4550**B of a phase-dithered grating. The unit cell **4550**B includes two first grating portions **4510**B and one second grating portion **4520**B. The second grating portion **4520**B is sandwiched by (or positioned between) the two first grating portions **4510**B. Sub-sections within the first grating portion **4510**B are configured to cause 0, φ_1, φ_2 phase shifts for 0th order, positive order, and negative order, respectively. Sub-sections within the second grating portion **4520**B are configured to cause 0, $+\varphi_2$, $-\varphi_2$ phase shifts for 0th order, positive order, and negative order, respectively.

[0433] An input light **4551**B can be incident on the unit cell **4550**B with a tilted angle. The input light **4551**B can be deflected by a sub-section in the first grating portion **4510**B into diffracted beam **4552**B with zero phase change at 0th order and diffracted beam **4555**B with $+\varphi_1$ phase change at a positive order. Diffracted beam **4552**B is further deflected at a sub-section in the second grating portion **4520**B to get diffraction beam **4553**B with $+\varphi_2$ phase change. Diffraction beam **4553**B is further deflected at a sub-section in the other first grating portion **4510**B to get diffraction beam **4554**B with −fit phase change. Assuming the input light **4551**B has an input phase being 0, diffraction beam **4554**B has a phase change φ_2-φ_1 compared to the input light **4551**B, thus diffraction beam **4554**B has an output phase φ_2-φ_1.

[0434] Similarly, diffraction beam **4555**B is deflected by a sub-section in the second grating portion **4520**B to get diffraction beam **4556**B with $-\varphi_2$ phase change. Diffraction beam **4556**B is deflected by a sub-section to get diffraction beam **4557**B with zero phase change. Thus, diffraction beam **4557**B has a phase change φ_1-φ_2 compared to the input light **4551**B, thus having an output phase φ_1-φ_2. As a result, the phase difference between diffraction beam **4554**B and **4557**B is $\Delta\varphi=2(\varphi_2-\varphi_1)$. As the grating is dithered, that is, the first grating portion **4510**B causes different phase shifts from the second grating portion **4520**B. That is, $\varphi_1\neq\varphi_2$. Thus, there is a nonzero phase difference between the output diffraction beams **4554**B and **4557**B.

[0435] If the phase variation between φ_1 and φ_2 can be controlled, the phase difference between the output diffraction beams **4554**B and **4557**B can be controllable, accordingly interference between the output diffraction beams **4554**B and **4557**B can be also controllable. That is, engineered phase variations (or perturbations) within the diffractive regions of the diffractive structure allow controllable constructive or destructive interference thus controllable output luminance.

[0436] Embodiments of the invention further provide methods of producing GDS files for grating patterns perturbed by a specified continuous phase function. A linear grating with grating vector $\vec{k}$ ($|\vec{k}|=2\pi/A$ and A is the grating pitch) can be specified as the isocontours of a scalar function of space:

$$\varphi_0(\vec{r})=\vec{k}\cdot\vec{r} \qquad \text{Equation 1:}$$

[0437] For a 50% duty cycle linear grating, the points within the lines of the grating are defined by:

$$\bigcup_j line_j, \text{ where } line_j=\{\vec{r}:2\pi j\leq\phi_0(\vec{r})\leq 2\pi(j+0.5)\} \qquad \text{Equation 2}$$

[0438] For a generically perturbed grating, the lines are defined by:

$$\bigcup_j line_j \; line_j=\{\vec{r}:2\pi j\leq\phi_0(\vec{r})+\nabla\phi(\vec{r})\leq 2\pi[j+d(\vec{r})]\}, \qquad \text{Equation 3}$$

where $\varphi(\vec{r}):\mathbb{R}^2\rightarrow\mathbb{R}$ is a scalar function of space that represents the perturbation, and $d(\vec{r})$ is the (possibly spatially varying) duty cycle of the grating in the range of (0, 1).

[0439] The depth function in the exit pupil expander (EPE) is implemented by an even aspheric lens function perturbation of the form:

$$\varphi(\vec{r})=c_1\rho^2+c_2\rho^4+\ldots, \qquad \text{Equation 4:}$$

where $\rho=|\vec{r}|$ with the origin at the center of the EPE grating region. The coefficients c_1, c_2, . . . are generally different for each color and depth plane.

[0440] A sinusoidal dither function is implemented by:

$$\phi(\vec{r}) = a\sin\left(\frac{2\pi}{p}\vec{r}\cdot\hat{u}\right), \quad \text{Equation 5}$$

where a is the amplitude of the dither function, p is the period of the sinusoid, and û is a unit vector specifying the direction in which the sinusoid varies. Typically, the period must be limited to being greater than ~0.1 mm in order to not introduce a significant amount of blue into the produced images.

[0441] Similar to the above, for a chirped sinusoid, the function used in certain prototypes is:

$$\phi(\vec{r}) = a\sin\left(\frac{2\pi x}{1 + x/43.6}\right), \quad \text{Equation 6}$$

where x is the x-coordinate of a local coordinate system with origin at the corner of the OPE farthest from the ICG and nearest the OPE, in units of millimeters.

[0442] For arbitrary functions, similar to the above, we allow $\varphi(\vec{r})$ to be an arbitrary function of space. Typically, we require that the highest spatial frequency correspond to a period of ~0.1 mm. In practice, these "band-limited" functions may be produced from an arbitrary function through filtering:

$$\varphi_{filtered} = \mathcal{F}^{-1}\{\mathrm{circ}_{1/p_{min}}[\mathcal{F}\varphi]\}, \quad \text{Equation 7:}$$

where F represents a Fourier transform and p_{min} is the minimum periodicity of spatial frequency allowed.

[0443] Since the grating ridge regions are defined as the isosurface contours of a function, a direct approach to pattern generation cannot be used. Since it is assumed that $|\vec{k}|$ (by far) the highest spatial frequency, then sampling can be performed along the direction of $\vec{k}$ to determine each edge of every grating ridge. Once this set of locations is determined, sampling can be performed at an increment perpendicular to the direction of $\vec{k}$ to obtain a new set of grating ridge edges, and these two sets of edge coordinates can be stitched together to form a set of parallelograms that grows each ridge region by a length of approximately the increment.

[0444] In sampling, the large constant linear term can be factored out, and the perturbation from the periodicity can be rapidly determined by a few Newton iterations. This can in addition be warm-started from the adjacent perturbations since the spatial variation of these perturbations is assumed to be slow.

Generation of Multiple Incoherent Images

[0445] Some embodiments of the present invention relate to systems and methods for generation of multiple incoherent images in waveguide-based near-to-eye displays. The waveguide-based display may superimpose multiple incoherent optical images to reduce wave interference-based image artifacts that adversely impact the performance of waveguide displays. Waveguide displays typically produce distracting interference patterns. However, according to some embodiments of the invention, a waveguide display is provided that projects many output images, where each individual output image has a unique interference pattern and the summation of all patterns appears as an image with higher luminance uniformity. This may be accomplished by (A) a waveguide display with multiple in-coupling elements, each illuminated with a copy of the desired output image, and/or (B) a waveguide display with a single in-coupling element that generates multiple incoherent copies within the waveguide itself.

[0446] Numerous benefits are achieved by way of the present invention over conventional techniques. For example, embodiments of the present invention provide a method for reducing wave interference-based image artifacts in a waveguide display while achieving a large field of view, high sharpness image in a thin waveguide. Other methods of reducing wave interference based image artifacts may have harsh tradeoffs with other important near-to-eye display metrics. Severe wave interference-based image artifacts may occur from self-interference of light within diffractive structures that perform the functionality of an orthogonal pupil expander (OPE). Typically, the magnitude of wave interference in proportional to the size of the OPE subelement with respect to the bounce spacing of light within the waveguide display. There are several ways of reducing the OPE size with respect to bounce spacing: (1) increase the waveguide thickness, which causes a near-to-eye display to be too heavy to comfortable wearing and reduces display brightness; (2) reduce the spatial two-dimensional footprint of the OPE, which reduces the maximum field of view supported by the waveguide display; and/or (3) greatly increase the refractive index, which is not possible within common transparent glasses, polymers, and crystals. Because of these tradeoffs, some diffractive waveguide displays may be thick and only support low field of view images.

[0447] A more complex method to reducing wave interference-based image artifacts, even in thin waveguide displays supporting high field of view images, is to add perturbations to the diffractive structures, typically in the form of spatially varying phase or amplitude perturbations in the OPE, in an effort to scramble the interference pattern. This method can successfully remove wave interference-based artifacts, but perturbations in a diffractive structure may also cause distortion and wave-front aberrations of the light beams that propagate inside the waveguide display. Hence, the diffractive perturbation method has a harsh tradeoff with image sharpness, and digital objects viewable through a near-to-eye display using this technique may appear blurry to a user.

[0448] Embodiments of the invention may not carry the tradeoffs of other techniques. Previous techniques that interfered with wave interference necessarily perturbed the light, leading to other undesirable image artifacts. Embodiments of the invention use the superposition of many output images, where each individual image exhibits strong unperturbed wave interference, but the incoherent summation of these images by the user's eye masquerades the luminance artifacts that lie within. Some embodiments of the disclosure describe not only the general strategy of superimposing many incoherent output images, but also specific methods to produce incoherent output images within a single waveguide display.

[0449] FIG. **46** is a block diagram illustrating a VOA system **4600**, in accordance with some embodiments. System **4600** may include a projector **4601** and a waveguide

display element. The waveguide display element may include a diffractive optical element **4640**, an orthogonal pupil expander (OPE) **4608**, and an exit pupil expander (EPE) **4609**, as described further herein. The OPE **4608** and/or EPE **4609** may also be considered to be diffractive optical elements, in some embodiments. The projector **4601** and the waveguide display element may be included in a near-to-eye display device, in some embodiments. Additional description related to the VOA is provided in relation to FIG. **20**.

[0450] FIG. **47**A is a block diagram of a waveguide display **4700**A. Waveguide display **4700**A may include an OPE **4708** and an EPE **4709**, which together form a pupil expansion device. Pupil expansion in the waveguide display **4700**A may typically be performed via cloning of the input light beam **4715** (e.g., of diameter 100 μm to 10 mm), many times, in order to create a two-dimensional array of output light beams **4720** (e.g., covering many square centimeters) to project the image toward the user's eye.

[0451] The inventors have determined that in waveguide displays, such as waveguide display **4700**A, the array of output light beams **4720** may not have uniform luminance. Further, because of interference effects within the waveguide display **4700**A, the array of output light beams **4720** may have a chaotic luminance profile resembling a random interference pattern. An exemplary interference pattern of this type is illustrated in FIG. **47**B, showing the spatial distribution of light exiting the EPE for a single particular projected angle of light. This spatial distribution may be referred to herein as a "near-field pattern". FIG. **47**B is non-uniform and includes multiple striations characterized by intensity modulation in the horizontal direction, i.e., the direction substantially along the direction of light propagating into the OPE.

[0452] To provide a large field-of-view, the diffractive regions on the waveguide display **4700**A may need to be larger in area. However, this may lead to more interactions between the projected light and the diffractive components within the waveguide display **4700**A. More interactions with the diffractive components may result in an increase in interference effects.

[0453] Mitigating image quality problems from wave interference may not be necessary in small field-of-view waveguide displays (e.g., 20×20 degrees), but may be crucial in large field-of-view waveguide displays (e.g., 40×40 degrees or larger). Thus, one approach that can be used to mitigate interference effects in diffractive waveguide displays, such as waveguide display **4700**A, includes reducing the field-of-view. Another approach to mitigating interference includes increasing the waveguide thickness. However, in mixed reality and/or augmented reality near-to-eye display applications, achieving a large field-of-view in combination with or in addition to low weight may be desirable. Accordingly, these approaches may be undesirable.

[0454] Another approach to mitigating interference includes adding phase variation to the diffractive regions, which necessarily causes phase errors across a light beam's wave-front. Such phase variation may "scramble" the interference patterns and remove interference effects. However, image sharpness may be reduced, causing the output image to appear blurry or out-of-focus.

[0455] Some embodiments of the invention do not aim to scramble the interference pattern, but rather to feed the waveguide display with multiple incoherent inputs. The output image associated with each input may still create an interference pattern in the output image. However, the superposition of many unique interference patterns may appear increasingly uniform as the number of inputs increases.

[0456] FIG. **48**A is a block diagram illustrating multiple inputs into a waveguide display **4800**A, in accordance with some embodiments. Waveguide display **4800**A may include an OPE **4808**A and an EPE **4809**A, which together form a pupil expansion device. Although shown as having only an OPE **4808**A and an EPE **4809**A, it is contemplated that the waveguide display **4800**A may include any number of in-coupling elements (e.g., diffraction gratings), such as between two and twenty. Waveguide display **4800**A may receive multiple light beams **4810**A, **4815**A, **4820**A as input. The light beams **4810**A, **4815**A, **4820**A may be received from multiple light sources (e.g., multiple projectors). Further, the light beams **4810**A, **4815**A, **4820**A may be spatially displaced, and may have a different near-field pattern.

[0457] Pupil expansion in the waveguide display **4800**A may be performed via cloning of the input light beams **4810**A, **4815**A, **4820**A many times in order to create many output light beams **4825**A to project the image toward the user's eye. The output light beams **4825**A may create an interference pattern in the output image. However, the superposition of the large number of unique interference patterns created by the many output light beams **4825**A may appear substantially uniform. FIG. **48**B is an output image from a waveguide display having multiple input light beams, in accordance with some embodiments. As compared to FIG. **47**B, FIG. **48**B is more uniform and exhibits less striations.

[0458] FIG. **48**C is a simplified flowchart illustrating a method **4800**C for generation of multiple incoherent images in a waveguide display using multiple input light beams, in accordance with some embodiments. The method includes projecting a plurality of light beams from a projector (**4810**C). In some embodiments, the plurality of light beams are instead projected from a plurality of projectors. In some embodiments, the plurality of light beams are projected from multiple light sources within a single projector.

[0459] The method also includes receiving the plurality of light beams from the projector at a diffractive optical element (**4820**C). The diffractive optical element may be diffractive optical element **4640** of FIG. **46**. The diffractive optical element may include a grating (e.g., an incoupling grating) that diffracts the plurality of light beams toward an OPE (e.g., OPE **4608**). In some embodiments, the grating may further cause cloning of the plurality of light beams, sending a larger number of light beams into the OPE.

[0460] The method further includes receiving the plurality of light beams from the diffractive optical element at the OPE (**4830**C). The OPE may also include a grating that diffracts the plurality of light beams toward an EPE (e.g., EPE **4609**). The grating may further cause cloning of the plurality of light beams, sending a larger number of light beams into the EPE. Additionally, the method includes receiving the plurality of light beams from the OPE at the EPE (**4840**C).

[0461] The method also includes projecting at least a portion of the plurality of light beams as the projected image (**4850**C). The plurality of light beams, which may also be referred to as the output light beams, may create an interference pattern in the projected image. However, the super-

position of the large number of unique interference patterns created by the many output light beams may appear substantially uniform. The many output light beams may be a result of the multiple input light beams and the cloning of the multiple input light beams.

[0462] It should be appreciated that the specific steps illustrated in FIG. **48**C provide a particular method of generating multiple incoherent images in near-to-eye display devices according to an embodiment of the present invention. Other sequences of steps may also be performed according to alternative embodiments. For example, alternative embodiments of the present invention may perform the steps outlined above in a different order. Moreover, the individual steps illustrated in FIG. **48**C may include multiple sub-steps that may be performed in various sequences as appropriate to the individual step. Furthermore, additional steps may be added or removed depending on the particular applications. One of ordinary skill in the art would recognize many variations, modifications, and alternatives.

[0463] FIG. **49**A is a block diagram illustrating a single light beam **4910**A input into a waveguide display **4900**A utilizing a diffractive beam splitter **4915**A, in accordance with some embodiments. Waveguide display **4900**A may include an OPE **4908**A and an EPE **4909**A, which together form a pupil expansion device. Although shown as having only an OPE **4908**A and an EPE **4909**A, it is contemplated that the waveguide display **4900**A may include any number of in-coupling elements. Waveguide display **4900**A may receive a single light beam **4910**A as input. The light beam **4910**A may be received as input from a single projector (not shown).

[0464] A diffractive beam splitter **4915**A may be placed downstream of the in-coupling element **4907**A and may split the single light beam **4910**A into multiple copies. The diffractive beam splitter **4915**A may produce incoherent copies of the single light beam **4910**A that are spatially separated. Thus, the incoherent copies of the single light beam **4910**A may produce unique interference patterns that may sum together incoherently. In some embodiments, the diffractive beam splitter **4915**A may include a periodic pattern of pitch 50 nm to 500 nm.

[0465] FIG. **49**B is a simplified flowchart **4900**B illustrating a method for generation of multiple incoherent images in a waveguide display using a diffractive beam splitter, in accordance with some embodiments. The method includes projecting a light input from a projector (e.g., projector **4601**) (**4910**B). In some embodiments, the light input may include a single light beam from a single projector.

[0466] The method further includes receiving the light input from the projector at a diffractive beam splitter (e.g., diffractive beam splitter **4915**A) (**4920**B). The method further includes splitting the light input into a plurality of light beams at the diffractive beam splitter (**4930**B). Specifically, the diffractive beam splitter may produce incoherent copies of the light beam that are spatially separated. Thus, the incoherent copies of the light beam may produce unique interference patterns that may sum together incoherently.

[0467] The method further includes receiving the plurality of light beams from the diffractive beam splitter at an OPE (e.g., OPE **4608**) (**4940**B). The OPE may include a grating that diffracts the plurality of light beams toward an EPE (e.g., EPE **4609**). The grating may further cause cloning of the plurality of light beams, sending a larger number of light beams into the EPE. The method further includes receiving the plurality of light beams from the OPE at the EPE (**4950**B).

[0468] The method further includes projecting at least a portion of the plurality of light beams as the projected image (**4960**B). The output light beams may create an interference pattern in the projected image. However, the superposition of the large number of unique interference patterns created by the many output light beams may appear substantially uniform. The many output light beams may be a result of the splitting and cloning of the single input light beam.

[0469] It should be appreciated that the specific steps illustrated in FIG. **49**B provide a particular method of generating multiple incoherent images in near-to-eye display devices according to an embodiment of the present invention. Other sequences of steps may also be performed according to alternative embodiments. For example, alternative embodiments of the present invention may perform the steps outlined above in a different order. Moreover, the individual steps illustrated in FIG. **49**B may include multiple sub-steps that may be performed in various sequences as appropriate to the individual step. Furthermore, additional steps may be added or removed depending on the particular applications. One of ordinary skill in the art would recognize many variations, modifications, and alternatives.

[0470] In some embodiments, the waveguide display may include multiple diffractive elements to split the input light beam. FIG. **50**A is a block diagram illustrating a single light beam **5010**A input into a waveguide display **5000**A utilizing two diffractive beam splitters **5015**A, **5020**A, in accordance with some embodiments. Although illustrated and described as having two diffractive beam splitters **5015**A, **5020**A, it is contemplated that any number of diffractive beam splitters may be used in accordance with the embodiments discussed herein. Waveguide display **5000**A may include an OPE **5008**A and an EPE **5009**A, which together form a pupil expansion device. Although shown as having only an OPE **5008**A and an EPE **5009**A, it is contemplated that the waveguide display **5000**A may include any number of in-coupling elements. Waveguide display **5000**A may receive a single light beam **5010**A as input. The light beam **5010**A may be received as input from a single projector (not shown).

[0471] Two diffractive beam splitters **5015**A, **5020**A may be placed downstream of the in-coupling element **5007**A and may split the single light beam **5010**A into multiple copies each. The diffractive beam splitters **5015**A, **5020**A may produce incoherent copies of the single light beam **5010**A that are spatially separated. Thus, the incoherent copies of the light beam **5010**A may produce unique interference patterns that may sum together incoherently. In some embodiments, the diffractive beam splitters **5015**A, **5020**A may include a periodic pattern of pitch 50 nm to 500 nm.

[0472] FIG. **50**B is a simplified flowchart **5000**B illustrating a method for generation of multiple incoherent images in a waveguide display using multiple diffractive beam splitters, in accordance with some embodiments. The method includes projecting a light input from a projector (e.g., projector **4601**) (**5010**B). In some embodiments, the light input may include a single light beam from a single projector.

[0473] The method further includes receiving the light input from the projector at a first diffractive beam splitter (e.g., diffractive beam splitter **5015**A) (**5020**B). The method

further includes splitting the light input into a plurality of first light beams at the first diffractive beam splitter (**5030**B). Specifically, the first diffractive beam splitter may produce incoherent copies of the light beam that are spatially separated. Thus, the incoherent copies of the light beam may produce unique interference patterns that may sum together incoherently.

[0474] The method further includes receiving the light input from the projector at a second diffractive beam splitter (e.g., diffractive beam splitter **5020**A) (**5040**B). The method further includes splitting the light input into a plurality of second light beams at the second diffractive beam splitter (**950**). Specifically, the second diffractive beam splitter may produce incoherent copies of the light beam that are spatially separated. Thus, the incoherent copies of the light beam may produce unique interference patterns that may sum together incoherently.

[0475] The method further includes receiving the plurality of first light beams and the plurality of second light beams from the first and second diffractive beam splitter, respectively, at an OPE (e.g., OPE **5008**A) (**5060**B). The OPE may include a grating that diffracts the plurality of first light beams and the plurality of second light beams toward an EPE (e.g., EPE **5009**A). The grating may further cause cloning of the plurality of first light beams and the plurality of second light beams, sending a larger number of light beams into the EPE. The method further includes receiving the plurality of first light beams and the plurality of second light beams from the OPE at the EPE (**5070**B).

[0476] The method further includes projecting at least a portion of the plurality of first light beams and the plurality of second light beams as the projected image (**5080**B). The output light beams may create an interference pattern in the projected image. However, the superposition of the large number of unique interference patterns created by the many output light beams may appear substantially uniform. The many output light beams may be a result of the splitting and cloning of the single input light beam.

[0477] It should be appreciated that the specific steps illustrated in FIG. **50**B provide a particular method of generating multiple incoherent images in near-to-eye display devices according to an embodiment of the present invention. Other sequences of steps may also be performed according to alternative embodiments. For example, alternative embodiments of the present invention may perform the steps outlined above in a different order. Moreover, the individual steps illustrated in FIG. **50**B may include multiple sub-steps that may be performed in various sequences as appropriate to the individual step. Furthermore, additional steps may be added or removed depending on the particular applications. One of ordinary skill in the art would recognize many variations, modifications, and alternatives.

[0478] It is contemplated that the various embodiments described above may be implemented alone or in any combination. For example, it is contemplated that multiple input light beams may be used in a waveguide display in combination with one or more diffractive beam splitters. Further, although described herein as being applicable to near-to-eye displays (e.g., mixed reality, virtual reality, and/or augmented reality wearable devices), it is contemplated that embodiments of the invention may be utilized in far-eye displays (e.g., car windshields), infrared illuminators for eye tracking, three dimensional depth sensing, and/or other computer vision systems.

Suppressing Reflections from Telecentric Projectors

[0479] According to some embodiments, systems and methods for suppressing reflections from telecentric projectors in near-to-eye display devices are provided. A diffractive optical element may be used to couple light from the telecentric projector into a waveguide-based near-to-eye display device. Reflections may be prevented from propagating back toward the telecentric projector through one or more of a variety of techniques, such as by implementing gratings on the diffractive optical element.

[0480] A telecentric projector is desirable to enable a large field of view near-to-eye display, but is typically plagued by "ghost" image artifacts resultant from back-and-forth reflections between the projector and the waveguide display. There are two conventional techniques to remove reflections in other optical systems that are poor choices in near-to-eye displays. First, a non-telecentric projector may be used, but this may increase the size and weight of the display assembly and significantly limit the maximum field of view of the display. Second, an optical isolator may be used based on a circular polarizer. Circular polarizers work well to prevent back reflections from devices without nano-patterning, like the reflection of light from bare glass or a partial mirror. However, an optical isolator comprising a circular polarizer may be incompatible with the polarization response of diffractive optical elements like 1D gratings that are used in conventional near-to-eye displays. Diffractive components like 1D gratings that are typically used in waveguide displays exhibit high polarization sensitivity, very dissimilar to the polarization response of bare glass without nano-patterning. Embodiments of the invention may use diffractive optical elements that have symmetric polarization responses to mimic that of bare glass that in conjunction with a circular polarizer may successfully remove reflections between a waveguide display and a projector. Further, the unique diffractive optical elements used in embodiments of the invention have an asymmetric in-coupling efficiency to enable a high efficiency of optical coupling to the consequent optical elements within the waveguide display.

[0481] FIG. **51**A is a block diagram illustrating a telecentric projector system **5100**A, in accordance with some embodiments. Telecentric projector system **5100**A may include a projector **5101** and a waveguide display element **5150**. The waveguide display element **5150** may include an incoupling grating, an OPE region, and an EPE region, as described further herein. The projector **5101** and the waveguide display element **5150** may be included in a near-to-eye display device, in some embodiments.

[0482] The projector **5101** of FIG. **51**A is telecentric in that the optical axis of the projector **5101** is coincident with the optical axis of subsequent light manipulation devices (e.g., the waveguide display element **5150**). For example, in FIG. **51**A, the projector **5101** may project light **5107**A perpendicularly to the plane of the waveguide display element **5150**. Because of the telecentric orientation, a reflection **5107**B of light **5107**A may propagate back into the projector **5101** from the waveguide display element **5150**. This may cause image artifacts when the reflection **5107**B exits the projector **5101** again. These image artifacts may manifest as "ghost" images that may appear as shifted, mirrored or copies of the intended image overlaid upon the intended image. These image artifacts may be distracting and lower the contrast of the overall display system.

[0483] One approach to solving problems associated with image artifacts involves using a non-telecentric configuration. FIG. **51**B is a block diagram illustrating a non-telecentric projector system **5110**B, in accordance with some embodiments. Non-telecentric projector system **5110**B may include a projector **5101** and a waveguide display element **5150**. The projector **5101** and the waveguide display element **5150** may be included in a near-to-eye display device, in some embodiments.

[0484] The projector **5101** of FIG. **51**B is non-telecentric in that the optical axis of the projector **5101** is not aligned with the optical axis of subsequent light manipulation devices (e.g., the waveguide display element **5150**). For example, in FIG. **51**B, the projector **5101** may be oriented at an angle with respect to the perpendicular direction to the waveguide display element **5150**. Because of the non-telecentric orientation, a reflection **5107**B of light **5107**A may be propagated by the waveguide display element **5150** partially or fully away from the projector **5101**. However, the non-telecentric configuration may make the design of the projector **5101** more complicated, because aberrations such as chromatic dispersion and field curvature may become more pronounced. In addition, the projector **5101** in a non-telecentric configuration may need to be larger than a projector in a telecentric configuration, and may limit field-of-view to the eyepiece.

[0485] Thus, systems and methods are needed for suppressing reflections from telecentric projectors in near-to-eye display devices. Embodiments of the invention meet this need and others by implementing a circular polarizer between a telecentric projector and subsequent light manipulation devices (e.g., a diffractive in coupling element, a waveguide pupil expander, etc.). Further, embodiments of the invention may implement a diffractive in coupling element that exhibits reflection of circular polarization in a particular polarization handedness (e.g., right-handed or clockwise, left-handed or counterclockwise) with extremely low efficiency into the same direction.

[0486] FIG. **52** is a block diagram illustrating a system **5200** for suppressing reflections from a telecentric projector **5201** in a near-to-eye display device, in accordance with some embodiments. The system **5200** may include a projector **5201**, a circular polarizer **5210**, a diffractive optical element **5240**, an orthogonal pupil expander **5208**, and an exit pupil expander **5209**. The diffractive optical element **5240** may include an incoupling grating, as described further herein. In some embodiments, the system **5200** may be included in a near-to-eye display device, such as a head mounted device. Although shown and described as being external to the projector **5201**, it is contemplated that the circular polarizer **5210** may be positioned internal to the projector **5201** in some embodiments. In some embodiments, the projector **5201** may include a polarization rotation-based spatial light modulator.

[0487] The system **5200** may include a projector **5201** that is designed to project telecentrically, coupled with an orthogonal pupil expander **5208** and exit pupil expander **5209** via a diffractive optical element **5240** located one or more surfaces of the orthogonal pupil expander **5208** and exit pupil expander **5209**. These elements may be elements of a waveguide display element, as described further herein. Although shown as only being located on one surface of the orthogonal pupil expander **5208** and exit pupil expander **5209** in FIG. **52**, it is contemplated that the diffractive optical element **5240** may be located on two or more surfaces of the orthogonal pupil expander **5208** and exit pupil expander **5209**. Further, although shown as fully covering one surface of the orthogonal pupil expander **5208** and exit pupil expander **5209**, it is contemplated that the diffractive optical element **5240** may alternatively or additionally cover portions of one or more surfaces of the orthogonal pupil expander **5208** and exit pupil expander **5209**.

[0488] The optical axis of the projector **5201** may be aligned to the surface normal to the diffractive optical element **5240** and/or the orthogonal pupil expander **5208** and exit pupil expander **5209**. A circular polarizer **5210** may be inserted between the diffractive optical element **5240** and the projector **5201**. The projector **5201** may project light **5207** onto the circular polarizer **5210**. The circular polarizer **5210** may receive the light **5207**, circularly polarize the light **5207** into circularly polarized light, and emit light **5215** that is circularly polarized in a particular handedness (e.g., right-handed or clockwise, left-handed or counterclockwise). In some embodiments, the circularly polarized light **5215** may be circularly polarized for a plurality of field-of-view directions. The diffractive optical element **5240** may be designed to couple this circularly polarized light **5215** into totally internally reflected modes of the orthogonal pupil expander **5208** and exit pupil expander **5209**.

[0489] The circular polarizer **5210** may be implemented by any of a variety of components that have high extinction ratio and may include transparent and/or absorbing materials. For example, the circular polarizer **5210** may include a linear polarizer and a quarter wave plate. In another example, the circular polarizer **5210** may include a zeroth or higher order dichroic polarizer. In another example, the circular polarizer may include a thin film stack of birefringent materials. Hypothetically speaking, if the orthogonal pupil expander **5208**, exit pupil expander **5209** and the diffractive optical element **5240** were replaced by a perfect planar mirror oriented with its surface normal aligned with the axis of the projector **5201**, then the circularly polarized light **5215** emerging from the circular polarizer **5210** would reflect from the mirror and propagate back toward the projector **5201**, with the reflection having an opposite polarization handedness than the circularly polarized light **5215** (e.g., clockwise and counterclockwise). Thus, the circular polarizer **5210** may be selected or configured to absorb incident light having the opposite polarization handedness.

[0490] The diffractive optical element **5240** may be designed such that the circularly polarized light **5215** emerging from the circular polarizer **5210** reflects with low efficiency into the same polarization handedness, such that if there is any reflection, it is characterized by the opposite polarization handedness, and may be absorbed by the circular polarizer **5210** after reflection from the diffractive optical element **5240**, the orthogonal pupil expander **5208** and/or the exit pupil expander **5209**. The geometric structure of the diffractive optical element **5240** may be designed to achieve the desired polarization characteristics. In some embodiments, the diffractive optical element **5240** may include a grating. For example, blazed gratings with a flat top or bottom or crossed grating structures may be implemented on the diffractive optical element **5240**, as described further herein. Binary lamellar or blazed gratings with

one-dimensional periodicity may be polarization selective with respect to linearly polarized light along or perpendicular to the grating grooves.

[0491] In some embodiments, the diffractive optical element **5240** may include polarization-insensitive lattice symmetry. Complete polarization insensitivity may be achieved with gratings with a high degree of symmetry. These gratings may include lattices with square or triangular symmetry, in which the unit cells are squares or regular hexagons. The scattering element within each unit cell may be formed by squares, crosses, octagons, or any other shape having C4 symmetry in the square lattice example. In the triangular lattice example, the scattering element may have C6 symmetry. These gratings may have reflection characteristics that are similar to that of a flat planar interface. Additional description related to the use of circular polarizers is provided in relation to FIG. **95**A and the associated description.

[0492] FIG. **53**A is a block diagram illustrating a square lattice grating structure on a diffractive optical element, in accordance with some embodiments. The square lattice grating structure may include a plurality of square lattice elements **5300**A. The square lattice element **5300**A may have C4 symmetry. Further, the square lattice element **5300**A may diffract light substantially equally in the arrowed directions (e.g., horizontally and vertically).

[0493] FIG. **53**B is a photograph illustrating a circular round element grating structure on a diffractive optical element, in accordance with some embodiments. The circular round element grating structure may include a plurality of circular lattice elements **5300**B. The circular lattice element **5300**B may have C4 symmetry. Further, the circular lattice element **5300**B may diffract light substantially equally in the arrowed directions (e.g., horizontally and vertically).

[0494] In some embodiments, the diffractive optical element may include a binary, multiple level, or blazed grating. The grating may be "crossed" or "cross-cut". For example, a blazed grating may have grooves etched perpendicular to the blazed grooves. To optimize diffraction efficiency, the period of the perpendicular grooves may be below the wavelength of light to suppress diffraction along the perpendicular direction. The exact value of the period may depend on the designed field-of-view of the near-to-eye display device, but may be less than the primary grating pitch.

[0495] FIG. **54**A is a top view of binary grating ridges **5420**A of a diffractive optical element **5410**A, in accordance with some embodiments. The binary grating ridges **5420**A may diffract light **5430**A equally in the arrowed directions. FIG. **54**B is a top view of cross-cut binary grating ridges **5420**B of a diffractive optical element **5410**B, in accordance with some embodiments. The cross-cut binary grating ridges **5420**B of FIG. **54**B may be produced by cutting fine lines into the binary grating ridges **5420**A of FIG. **54**A. The cross-cut binary grating ridges **5420**B may have reduced polarization sensitivity, but still diffract light **5430**B equally in the arrowed directions. Further, the cross-cut binary grating ridges **5420**B may suppress diffraction while simultaneously reducing the reflection into the same polarization state as injected light. The gratings shown in FIGS. **54**A and **54**B may diffract equally into only two directions, rather than four or six for a lattice with high symmetry.

[0496] In some embodiments, the diffractive optical element may have a grating that is designed to diffract stronger in one direction than other directions. This may preclude the use of a grating with a high degree of lattice symmetry because there is a substantial amount of light that is lost to diffraction into undesired directions. FIG. **55** is a top view of cross-cut biased grating ridges **5520** of a diffractive optical element **5510**, in accordance with some embodiments. In FIG. **55**, the grating **5520** has been refined to introduce a bias toward one of the two directions (e.g., the left direction **5530**A as opposed to the right direction **5530**B) by optimizing the shape of the scattering elements that compose the grating. For example, the rectangular elements of FIG. **54**B may be replaced with the triangular elements to produce a grating that diffracts more strongly in one direction. FIG. **56** is a photograph illustrating a triangular element grating structure **5620** on a diffractive optical element **5610**, in accordance with some embodiments. FIG. **56** may represent the grating structure illustrated in FIG. **55**, as fabricated. FIG. **57** is a photograph illustrating an oval element grating structure **5720** on a diffractive optical element **5710**, in accordance with some embodiments.

[0497] Various processes may be used to fabricate the gratings described herein. For example, electron beam lithography may be used. According to electron beam lithography, an electron beam resist is spun on a wafer, an electron beam is scanned over the pattern area, the resist is developed, then an etch process may be used to transfer the pattern to the wafer. Alternatively, the resist may be used as a surface relief pattern directly. The resist may be positive or negative (i.e., the exposed area may be either a pit or a mesa). The etch process may be dry (e.g., reactive ion etching, chemically assisted ion beam etching, etc.) or wet (e.g., potassium hydroxide bath). This process may produce high resolution pattern, so sharp geometric features may be produced (e.g., down to 20 nm resolution).

[0498] In another example, scanning ultraviolet (UV) lithography with reticle photomasks may be used. A reticle photomask may be made of the periodic grating pattern, and in some embodiments, at an enlargement factor (e.g., four or five times). The reticle may be used as a mask in a UV lithography system to expose photoresist that has been spun on a wafer. The resist may be developed, and the pattern may be transferred to the wafer via an etch process, such as that described above. This process may be limited to tens of nanometers in resolution. Multiple exposures may also be employed, as described further herein.

[0499] In another example, two photon polymerization may be used. A liquid-phase resist may be spun onto a substrate, and two beams of non-collinear low energy (i.e., energy below half of the polymerization threshold energy) photons are directed at pattern locations. Where the beams intersect, a two-photon chemical process polymerizes the resist, turning it into a cross-linked solid. The resist may be developed and the polymerized patterned areas may remain. The pattern may be used directly or transferred to the substrate using an etch process, such as that described above. This process may be slow, but is capable of very high resolution.

[0500] In another example, multiple exposure interference lithography may be used. Two beams of non-collinear coherent light may be directed at a resist-coated substrate. Where the beams interfere constructively, the resist may be exposed, and where the beams interfere destructively, the resist may not be exposed. The beams may be approximate plane waves polarized in the same direction, resulting in

interference patterns that consist of a periodic array of lines. This process may be used for one dimensional periodic gratings consisting of lines. This process may be extended by performing multiple exposures where the lines are not perpendicular to each other to, for example, define two dimensional periodic gratings with square or hexagonal unit cells.

[0501] In another example, focused ion beam milling may be used. A beam of, for example, gallium ions may be accelerated to strike a substrate and physically sputter or ablate away materials. Patterns may be "dug" out of substrates. This process may be slow, but is high resolution. However, the ablated material may tend to redeposit.

[0502] In another example, self-assembled masks may be used. A set of (e.g., polystyrene) beads or particles in suspension may be placed on a substrate. Through evaporation, the particles may tend to self-assemble, due to surface tension, into regular periodic arrays. These self-assembled patterns may possess the correct periodicity to act as either the diffractive structure itself, or a physical etch mask for pattern transfer. These self-assembled structures may also require fixation to prevent them from disassembling.

[0503] A grating may also be mass produced. Various techniques may be used to mass produce a grating. For example, nano-imprint lithography may be used. A master template surface relief pattern may be used to stamp replicas. This master template may be stiff (such as directly using an etched silicon wafer to stamp additional wafers), or flexible (such as a surface relief pattern on a roll of polymer substrate). In addition, some diffractive structures may be illuminated to produce a near-field or aerial diffraction pattern that may be used to lithographically expose new patterns.

[0504] FIG. **58** is a simplified flowchart **5800** illustrating a method of suppressing reflections from telecentric projectors in near-to-eye display devices according to an embodiment of the present invention. The method includes projecting light from a projector (**5810**). The projector may be any of the projectors described herein, for example. The projector may be configured to project the light perpendicular to a diffractive optical element. The projector may include a polarization rotation-based spatial light modulator.

[0505] The method further includes receiving the projected light at a circular polarizer (**5820**). In some embodiments, the circular polarizer may include a linear polarizer and a quarter wave plate. In some embodiments, the circular polarizer may include a zeroth or higher order dichroic polarizer. In some embodiments, the circular polarizer may include a thin film stack or birefringent materials. The circular polarizer may be, for example, any of the circular polarizers described herein.

[0506] The method further includes circularly polarizing the projected light into circularly polarized light characterized by a first handedness of polarization (**5830**). The first handedness of polarization may be right-handed (i.e., clockwise) or left-handed (i.e., counter clockwise). The circularly polarized light may be circularly polarized for a plurality of field-of-view directions.

[0507] The method further includes receiving circularly polarized light from the circular polarizer at a diffractive optical element (**5840**). The diffractive optical element may be, for example, any of the diffractive optical elements described herein. The diffractive optical element may include a grating, such as, for example, an incoupling grating. The grating may include at least one of a binary grating, a multiple level grating, or a blazed grating. The grating may include polarization-insensitive lattice symmetry. The polarization-insensitive lattice symmetry may include at least one of square lattice symmetry or triangular lattice symmetry.

[0508] The method further includes receiving the circularly polarized light from the diffractive optical element at an orthogonal pupil expander (**5850**). The orthogonal pupil expander may be, for example, any of the OPEs described herein. In some embodiments, the diffractive optical element and/or the orthogonal pupil expander may reflect a reflection of the circularly polarized light in a second handedness of polarization opposite to the first handedness of polarization (i.e., the first handedness may be right-handed, while the second handedness may be left-handed, or vice versa). The diffractive optical element may be configured to suppress any reflection of the circularly polarized light in the first handedness of polarization, while passing the reflection of the circularly polarized light in the second handedness of polarization to the circular polarizer. In these embodiments, the circularly polarizer may absorb the reflection of the circularly polarized light in the second handedness of polarization. The method further includes receiving the circularly polarized light from the orthogonal pupil expander at an exit pupil expander (**5860**). The method further comprises projecting at least a portion of the circularly polarized light as the projected image (**5870**).

[0509] It should be appreciated that the specific steps illustrated in FIG. **58** provide a particular method of suppressing reflections from telecentric projectors in near-to-eye display devices according to an embodiment of the present invention. Other sequences of steps may also be performed according to alternative embodiments. For example, alternative embodiments of the present invention may perform the steps outlined above in a different order. Moreover, the individual steps illustrated in FIG. **58** may include multiple sub-steps that may be performed in various sequences as appropriate to the individual step. Furthermore, additional steps may be added or removed depending on the particular applications. One of ordinary skill in the art would recognize many variations, modifications, and alternatives.

Variable Geometry Diffractive Optical Elements

[0510] According to some embodiments of the present invention, methods and systems are provided that improve the image quality of light field waveguide displays by modulating the diffraction efficiency and/or optical phase of diffractive structures (e.g., diffraction grating regions) via spatial modulation of binary grating height. Utilizing grating height modulation, embodiments of the present invention mitigate one or more image artifacts that adversely impact the performance waveguide displays: A) interference-based image artifacts, which often appear as dark bands or striations in the output image, and B) variation in image brightness with respect to eye position. As described herein, methods of fabricating optical structures can include the use of grayscale lithography, the use of multiple lithographic exposures and etching processes, and the like.

[0511] Numerous benefits are achieved by way of the present invention over conventional techniques. For example, embodiments of the present invention provide methods and systems that improve the image quality of light

field waveguide displays by modulating the diffraction efficiency and/or optical phase of grating regions via spatial modulation of grating height. In typical top-down fabrication processes for gratings, the grating height cannot be specified in lithography, accordingly, embodiments of the present invention provide advanced post-processing techniques suitable for creating spatial variation of the grating height. Hence, typical light field waveguide displays utilizing gratings are limited in design to have only one or a small number of grating heights. Varying diffraction efficiency and/or optical phase among different grating regions in a waveguide display is desirable to produce images with high brightness, high luminance uniformity, high color uniformity, high sharpness and low interference-based image artifacts. In contrast with the embodiments described herein, typical waveguide displays only manipulate diffraction efficiency and/or optical phase between different grating regions by varying grating duty cycle, pitch and angle. Variable grating duty cycle allows for a very small tuning range of diffraction efficiency and optical phase. Varying grating pitch and angle allows for a large tuning range of optical phase, but at the expense of distortion and blur in a waveguide display. Varying grating height allows for a large tuning range of diffraction efficiency and optical phase with negligible distortion and blur.

[0512] Some embodiments of the present invention reduce image artifacts by modulating the diffraction efficiency and/or randomizing the relative phases of the multiple propagation paths to reduce or eliminate these interference effects. As described herein, randomization can be achieved by modulating the grating height as a function of position, which results in a variation in diffraction efficiency as desired. For example, a variable distribution of the grating height in each region or sub-section of the OPE will perturb the optical phase and will reduce interference-based image artifacts of the output image as the coherence among all the possible optical paths in the OPE is reduced. Furthermore, a graded variation of the height of the gratings in the EPE will increase the brightness uniformity across the field of view in the output image and the brightness uniformity across different eye positions.

[0513] FIG. **59**A is a simplified schematic diagram illustrating a plan view of a diffractive structure characterized by a constant diffraction efficiency according to an embodiment of the present invention. In FIG. **59**A, the diffractive structure **5930**, which can be an element of an OPE or EPE as described herein, or an incoupling grating (ICG), which couples light from the projector into the eyepiece layers, is uniform in diffraction efficiency as a function of lateral (i.e. parallel to the plane of the eyepiece layers) position. As an example, an OPE having a uniform grating depth as a function of position could result in constant diffraction efficiency across the OPE.

[0514] FIG. **59**B is a simplified schematic diagram illustrating a plan view of a diffractive structure characterized by regions of differing diffraction efficiency according to an embodiment of the present invention. In contrast with the constant diffraction efficiency as a function of position illustrated in FIG. **59**A, FIG. **59**B illustrates differing diffraction efficiencies as a function of position. In the example illustrated in FIG. **59**B, four different diffraction efficiencies are illustrated by regions represented by four different shades of gray (i.e., white (**5942**), light gray (**5944**), dark gray (**5946**), and black (**5948**)). As an example, white regions **5942** can represent the lowest diffraction efficiency and black regions **5948** can represent the highest diffraction efficiency, with light gray **5944** and dark gray **5946** regions representing intermediate diffraction efficiencies.

[0515] The differences in diffraction efficiency between regions can be constant or vary depending on the particular applications. Moreover, although four regions characterized by different diffraction efficiencies are illustrated in FIG. **59**B, this is not required by some embodiments of the present invention and a greater number of regions or a lesser number of regions can be utilized. As described more fully herein, in a particular embodiment, a first region (e.g., a white region **5942**) has a first grating depth and a second region (e.g., a black region **5948**) has a second grating depth greater than the first grating depth, thereby providing a higher diffraction efficiency for the black regions than that achieved for the white regions. One of ordinary skill in the art would recognize many variations, modifications, and alternatives.

[0516] In the embodiment illustrated in FIG. **59**B, in each region, the diffraction efficiency is constant. The size of the regions can vary depending on the particular application, for example, with dimensions on the order of 10 μm to millimeters. As an example, if the size of the OPE is on the order of 3 mm on a side and the size of the regions is on the order of 0.3 mm on a side, the OPE could include ~100 regions. In the example illustrated in FIG. **59**B, the regions characterized by different diffraction efficiencies are distributed randomly, although this is not required by the present invention. In other implementations, the difference in diffraction efficiency between adjacent regions can be set below a predetermined threshold, follow a sinusoidal pattern, be monotonically increasing or decreasing, randomness impressed on a monotonically increasing or decreasing function, be determined by a computational hologram design, be determined by a freeform lens design, or the like.

[0517] Thus, as illustrated in FIG. **59**B, some embodiments of the present invention spatially vary the height level of a grating structure as a function of lateral position to modify the diffraction efficiency as a function of position. Several different fabrication approaches can be used to spatially control the diffraction efficiency and/or optical phase to improve the image quality of a waveguide display as described more fully herein. As an example, in a waveguide display, the OPE and/or EPE grating regions can be divided into many regions, with each region having a different grating height than one or more other regions making up the OPE and/or EPE.

[0518] FIG. **59**C is a simplified schematic diagram illustrating a plan view of a diffractive structure characterized by regions of differing diffraction efficiency according to another embodiment of the present invention. In the embodiment illustrated in FIG. **59**C, the region size is smaller than that illustrated in FIG. **59**B, resulting in an increased number of regions. For example, for an OPE on the order of 3 mm on a side and a region size on the order of 0.1 mm, the OPE could include ~900 regions. As will be evident to one of skill in the art, the particular region size can be selected depending on the particular application. The number of different diffraction efficiencies can be four different diffraction efficiencies, as illustrated in FIG. **59**B, or can be greater or less. In the embodiment illustrated in FIG. **59**C, the diffraction efficiency is constant in each region, with the differences between regions providing variation in diffraction efficiency

as a function of position. One of ordinary skill in the art would recognize many variations, modifications, and alternatives.

[0519] FIGS. **60**A-H are simplified process flow diagrams illustrating a process for fabricating variable diffraction efficiency gratings using gray scale lithography according to some embodiments of the present invention.

[0520] As illustrated in FIGS. **60**A-H, gray scale lithography is utilized to form a diffractive structure (e.g., a diffraction grating) with varying diffraction efficiency as a function of position. As will be evident to one of skill in the art, gray scale lithography is a lithographic technique in which the thickness of the photoresist (i.e., resist) after development is determined by the local exposure dose. The spatial distribution of the dose can be achieved by a photomask in which the transmittance varies in different regions. Referring to FIG. **60**A, mask **6007** is exposed to incident light **6005**. The mask **6007** has a graded transmittance as a function of position, for example, high transmittance on a first side (e.g., the left side) and a low transmittance on a second side (e.g., the right side). The transmittance can be graded linearly or non-linearly. In addition to gray scale lithography, other direct writing techniques, such e-beam lithography or laser writing, can be used to spatially control the dose distribution and are applicable to embodiments of the present invention.

[0521] Substrate **6010** (e.g., silicon, silica, or the like) is coated with a hard mask layer **6012** and a resist layer **6014**. In an embodiment, the hard mask layer is formed using SiO_2 or other suitable materials. In some embodiments, the hard mask layer can be formed using an oxidation process, thus, the use of the term "coated" includes processes other than deposition. Upon exposure using mask **6007**, the resist adjacent the portion of the mask with high transmittance (e.g., the left side) receives a higher dose than the resist adjacent portion of the mask with lower transmittance (e.g., the right side).

[0522] FIG. **60**B illustrates the resist profile after exposure and development. Due to the higher dose received adjacent the portion of the mask with high transmittance, the height of the resist layer **6014** is tapered from a thin value to a thicker value as a function of position. Etching of the resist/hard mask layer is then performed.

[0523] FIG. **60**C illustrates an etch profile after etching using the resist profile illustrated in FIG. **60**B. The resist profile is transferred to the hard mask layer in this embodiment by "proportional RIE." In this process, the resist will delay the etching of the underlying material and the delay is proportional to the etch thickness. The ratio between the etching rate of the resist and the etching rate of the underlying material determines the vertical proportionality between the resist profile and the etched profile. As shown in FIG. **60**C, the height difference present in the resist profile has been transferred to the hard mask layer **6025**, resulting in a hard mask layer with a tapered profile as the thickness of the hard mask layer varies as a function of position. FIG. **60**D illustrates formation of a diffractive structure defined in resist layer **6030** on the tapered hard mask layer **6025**. For example, the patterned resist layer can be formed by spinning and patterning of resist as will be evident to one of skill in the art. It will be noted that lithographic process, including UV, EBL or nanoimprint, can be used to pattern the hard mask layer with the desired diffractive structure.

[0524] FIG. **60**E illustrates the formation of a diffractive structure in the hard mask layer, which will provide a tapered etch mask subsequently used to form a grating structure in the substrate. In FIG. **60**E, an etch process is utilized that is characterized by a high etch rate in the hard mask material (e.g., SiO_2) and a low etch rate for the substrate material (e.g., silicon). This etch process forms a tapered etch mask that includes the periodicity of the grating structure in a tapered etch mask material that varies in thickness as a function of position.

[0525] FIG. **60**F illustrates removal of the resist layer **6030** and the initial etching of the substrate using the tapered etch mask and a proportional etch process. FIG. **60**G illustrates a master **6045** and an etch profile after etching using the tapered etch mask illustrated in FIG. **60**F. As shown in FIG. **60**G, the height difference present in the tapered etch mask has been transferred to the substrate, with a shallower etch (i.e., lower grating height) in region **6050** (associated with the higher transmittance region of the gray scale mask) and a deeper etch (i.e., higher grating height) in region **6052**. As an example, the variation in height between grating teeth can vary over a predetermined range, for example, from 5 nm to 500 nm. Thus, as illustrated in FIG. **60**G, embodiments of the present invention utilize a gray scale lithography process to form a master having a diffractive structure with a varying grating height and, as a result, varying diffraction efficiency, as a function of position. Although a linear increase in grating height is illustrated in FIG. **60**G as a result of the linear transmittance variation in the gray scale mask, the present invention is not limited to this linear profile and other profiles having predetermined height variations are included within the scope of the present invention. It should be noted that although a single variable height region is illustrated in FIG. **60**G, this single region should be considered in light of FIG. **59**B, which illustrates a plurality of regions of differing diffraction efficiency. The tapering of the grating height can thus be combined with a predetermined grating height associated with a particular region to provide variation in diffraction efficiency, both intra-region as well as inter-region. Moreover, as discussed herein, the use of a gray scale mask that varies in transmittance on a length scale less than size of the variable height region illustrated in FIG. **60**G, enables the use of a gray scale mask that passes differing amounts of light on a scale of the periodicity of the grating teeth, resulting in a grating height profile that varies on a tooth by tooth basis. Thus, in addition to discrete regions, embodiments of the present invention include continuous variation implementations. One of ordinary skill in the art would recognize many variations, modifications, and alternatives.

[0526] FIG. **60**H illustrates a sub-master **6060** that is fabricating using master **6045**, which can be used in a replication process to imprint additional copies. As illustrated by sub-master **6060**, will have a complement of the predetermined patterned structure present in the master. For example, since the master illustrated in FIG. **60**G has a planar surface **6062** aligned with the bottom of the grating structure, the sub-master **6060** has the tops of the grating structure aligned with planar surface **6064**.

[0527] In the embodiment illustrated in FIG. **60**H, the diffractive optical elements are characterized by a planar top surface **6062**, with the diffractive structures extending to varying distances in the substrate. In other words, the tops of the grating lines are coplanar. In contrast, in the embodiment

illustrated in FIG. **62**C, the diffractive optical elements extend to a constant depth in the substrate and the difference in diffraction efficiency results from differences in diffractive element height with respect to the constant depth plane. In other words, the bottoms of the grating lines are coplanar.

[0528] It should be noted that a replication process can convert a diffractive structure with the tops of the grating being coplanar into a diffractive structure with the bottoms of the grating being coplanar. An additional replication process can provide for the opposite conversion. Referring to FIGS. **60**G and **60**H, in FIG. **60**G, the bottom of the grating lines are coplanar with plane **6061**. If the structure illustrated in FIG. **60**G is replicated, the structure illustrated in FIG. **60**H is produced, with the tops of the grating lines being coplanar with top surface **6062**. As will be evident to one of skill in the art, replication of the structure illustrated in FIG. **60**H will result in production of the structure illustrated in FIG. **60**G. Thus, two replication processes can produce a copy of the original mold.

[0529] FIGS. **61**A-C are simplified process flow diagrams illustrating a process for fabricating regions with differing surface heights according to an embodiment of the present invention. As described herein, gray scale lithography can be utilized to form regions with differing surface heights. Referring to FIG. **61**A, mask **6110** is exposed to incident light **6105**. The mask **6110** has a first region **6112** characterized by a first transmittance and a second region **6114** characterized by a second transmittance greater than the first transmittance. Substrate **6120** is coated with resist layer **6122**. Upon exposure using mask **6110**, the resist adjacent second region **6114** receives a higher dose than the resist adjacent first region **6112**.

[0530] FIG. **61**B illustrates the resist profile after exposure and development. Due to the higher dose received adjacent second region **6114**, the height of the resist in region **6132** is less than the height of the resist in region **6130**.

[0531] FIG. **61**C illustrates an etch profile after etching using the resist profile illustrated in FIG. **61**B. As shown in FIG. **61**C, the height difference present in the resist profile has been transferred to the substrate, with a deeper etch (i.e., lower surface height) in region **6142** and a shallower etch (i.e., higher surface height) in region **6140**. Thus, embodiments of the present invention utilize a gray scale lithography process to form surface profiles with varying height as a function of the gray scale pattern present in the gray scale mask.

[0532] FIGS. **62**A-C are simplified process flow diagrams illustrating a process for fabricating regions with gratings having differing diffraction efficiencies according to an embodiment of the present invention. In the embodiment illustrated in FIGS. **62**A-C, the substrate **6210** includes a grating structure **6215** that is processed to form a portion of a diffractive optical element.

[0533] In FIG. **62**A, the fabrication processes starts with a substrate characterized by planar and parallel top and bottom surfaces, i.e., the top surface is not tilted with respect to the bottom surface. The diffractive structures are etched into the substrate such that the top of the grating lines are planar and the variation in grating height is associated with differences in the distance that the grating elements extend into the substrate.

[0534] The substrate **6210** includes a support surface **6201** and a grating surface **6203** opposite the support surface. The grating surface **6203** is aligned with the top of the grating structure, which is characterized by a uniform grating height in this embodiment. Although the grating structure **6215** is illustrated as fabricated in the substrate material in FIG. **62**A, this is not required by the present invention and the grating structure can be made from a different material than the substrate as illustrated in FIG. **63**A and FIG. **64**A and, in some embodiments, used as mask.

[0535] Referring to FIG. **62**A, mask **6207** is exposed to incident light **6205**. The mask **6207** has a first region **6212** characterized by a first transmittance and a second region **6214** characterized by a second transmittance greater than the first transmittance. Substrate **6210** is coated with resist layer **6220**. Upon exposure using mask **6207**, the resist adjacent second region **6214** receives a higher dose than the resist adjacent first region **6212**.

[0536] FIG. **62**B illustrates the resist profile after exposure and development. Due to the higher dose received adjacent second region **6214**, the height of the resist in region **6232** is less than the height of the resist in region **6230**.

[0537] FIG. **62**C illustrates an etch profile after etching using the resist profile illustrated in FIG. **62**B. As shown in FIG. **62**C, the height difference present in the resist profile has been transferred to the grating structure **6215**, with a portion of the grating structure removed in region **6242** and the original grating structure preserved in region **6240**. The presence of the resist between the grating teeth enables etching of the tops of the grating structure while preventing etching of the bottom of the grating structure. Accordingly, as illustrated in FIG. **62**C, the height of the gratings in region **6242** is less than the height of the gratings in region **6240**, resulting in regions in which the gratings have differing diffraction efficiencies.

[0538] In the embodiment illustrated in FIG. **62**C, two regions **6240** and **6242** with differing grating heights are illustrated, but the present invention is not limited to two regions and additional regions with differing heights can be fabricated. Referring to FIG. **59**B, four different types of regions are illustrated as randomly distributed across the diffractive structure. In some embodiments, fewer or greater than four different regions are utilized. Using a single exposure, formation of regions of resist with varying height as a function of position can be accomplished, with the resist variation then transferred into gratings of varying height and corresponding diffraction efficiencies. As discussed herein, variation of the diffraction efficiency between regions can be random, monotonically increasing or decreasing, randomness impressed on a monotonically increasing or decreasing function, a sinusoidal pattern, be determined by a computational hologram design, be determined by a freeform lens design, or the like.

[0539] It should be noted that although the regions illustrated in FIG. **62**C have uniform grating height within each region **6240** and **6242**, this is not required by the present invention. Utilizing a gray scale mask that varies on a length scale less than the region size, variation in the grating height within a region, as well as variation in the grating height between regions can be implemented. In the most general case, a gray scale mask can be used that passes differing amounts of light on a scale of the periodicity of the grating teeth, resulting in a grating height profile that varies on a tooth by tooth basis. Thus, in addition to discrete regions, embodiments of the present invention include continuous

variation implementations. One of ordinary skill in the art would recognize many variations, modifications, and alternatives.

[0540] FIGS. **63**A-H are a simplified process flow diagram illustrating use of a multi-level etching process to fabricate regions characterized by differing diffraction efficiencies according to an embodiment of the present invention. Referring to FIG. **63**A, the fabrication process starts with substrate **6302** on which patterned hard mask **6304** (e.g., an SiO_2 hard mask) is present. As an example, the patterned hard mask **6304** can have a pattern associated with a diffractive optical element, which can be a diffraction grating with a predetermined periodicity (e.g., on the order of 200 nm to 400 nm) and height (e.g., on the order of 10 μm to 500 μm). As described below, the use of materials with different properties, including etch rates, enables use of the patterned hard mask as a masking material. The combination of substrate **6302** and patterned hard mask **6304** can be referred to as a substrate structure **6306**. FIG. **63**B illustrates coating of the substrate structure **6306** with a resist layer **6310**. A first lithography process is illustrated in FIG. **63**C that defines region **6312** covered by resist layer **6310** and region **6314** in which the resist is removed, exposing portions of the patterned hard mask **6304**. It will be appreciated that although only two regions are illustrated in FIG. **63**C, the present invention is not limited to just two regions and additional regions can be provided as appropriate to the particular application. One of ordinary skill in the art would recognize many variations, modifications, and alternatives.

[0541] FIG. **63**D illustrates a first etching process (Level 1 etch) used to extend grating features in the exposed portions into the substrate by a first distance D_1. As illustrated herein, it is generally desirable to use a selective etch process that provides selectivity between the patterned hard mask and the substrate because of the multiple etch process steps.

[0542] A second lithography process is illustrated in FIG. **63**E that defines region **6322** covered by resist (the coating with resist for this second lithography process is not illustrated for purposes of convenience) and region **6324** in which the resist is removed, exposing portions of the patterned hard mask **6304** that are different from the portions exposed during the first lithography process. FIG. **63**F illustrates a second etching process (Level 2 etch) used to extend grating features in the exposed portions into the substrate by a second distance D_2. Referring to FIGS. **63**C and **63**F, areas of the substrate in which regions **6314** and **6324** overlap are etched in both the first and second etching processes, resulting in grating features that extend to a distance of D_1+D_2.

[0543] FIG. **63**G illustrates removal of the resist and FIG. **63**H illustrates removal of the patterned hard mask to provide a master with a predetermined patterned structure.

[0544] Embodiments of the present invention enable the transfer of a predetermined profile using an initially uniform grating structure in order to form a grating profile that includes predetermined height variations, and diffraction efficiency as a result. This process can be viewed in Boolean logic terms as effectively performing an "AND" operation in which the profile associated with the gray scale mask is combined with the grating structure as an "AND" operation.

[0545] In some embodiments, additional etching processes are performed, forming grating features that extend N additional distances (i.e., $D_3, D_4, \ldots, D_N$) into the substrate, after resist coating (not shown) and the N additional lithography processes (not shown) have been performed. N can be greater than or equal to 3 in these embodiments. Accordingly, embodiments of the present invention provide an N-level etching process in which the depth of the grating features vary as a function of the number of etching levels and the lithography processes used to define the etched areas.

[0546] The master can be used in a replication process to imprint copies. The copies will have a complement of the predetermined patterned structures. For example, since the master illustrated in FIG. **63**H has a planar surface aligned with the top of the patterned structure, the copy would have the bottoms of the patterned structure aligned.

[0547] As an example, a replication process could be used to create a sub-master (with a complementary patterned structure), which can then be used to create a copy that reproduces the predetermined patterned structure from the master.

[0548] FIGS. **64**A-H are a simplified process flow diagram illustrating use of a multi-level etching process to fabricate variable diffraction efficiency gratings according to an embodiment of the present invention.

[0549] Referring to FIG. **64**A, the fabrication process starts with substrate **6402** on which patterned hard mask **6404** (e.g., an SiO_2 hard mask) is present. As an example, the patterned hard mask **6404** can have a pattern associated with a diffractive optical element, which can be a diffraction grating with a predetermined periodicity (e.g., on the order of 200 nm to 400 nm) and height (e.g., on the order of 10 μm to 500 μm). As described below, the use of materials with different properties, including etch rates, enables use of the patterned hard mask as a masking material. The combination of substrate **6402** and patterned hard mask **6404** can be referred to as a substrate structure **6406**. FIG. **64**B illustrates coating of the substrate structure **6406** with a resist layer **6410**. A first lithography process is illustrated in FIG. **64**C that defines regions **6412** covered by resist layer **6410** and regions **6414** in which the resist is removed, exposing portions of the patterned hard mask **6404**.

[0550] FIG. **64**D illustrates a first etching process (Level 1 etch) used to extend grating features in the exposed portions into the substrate by a first distance D_1. As illustrated herein, it is generally desirable to use a selective etch process that provides selectivity between the patterned hard mask and the substrate because of the multiple etch process steps. A second lithography process is illustrated in FIG. **64**E that defines regions **6422** covered by resist (the coating with resist for this second lithography process is not illustrated for purposes of convenience) and regions **6424** in which the resist is removed, exposing portions of the patterned hard mask **6404** that are different from the portions exposed during the first lithography process. FIG. **64**F illustrates a second etching process (Level 2 etch) used to extend grating features in the exposed portions into the substrate by a second distance D_2. Referring to FIG. **64**F, areas of the substrate in which regions **6414** and **6424** overlap are etched in both the first and second etching processes, resulting in grating features that extend to a distance of D_1+D_2.

[0551] FIG. **64**G illustrates the completion of a third etching process, forming grating features that extend an additional distance D_3 in the substrate, after resist coating (not shown) and a third lithography process (Level 3 etch, not shown) have been performed. FIG. **64**H illustrates

removal of the patterned hard mask **6404** to provide a master with a predetermined patterned structure. Accordingly, embodiments of the present invention provide an N-level etching process in which the depth of the grating features vary as a function of the number of etching levels and the lithography processes used to define the etched areas.

[0552] The master can be used in a replication process to imprint copies. The copies will have a complement of the predetermined patterned structures. For example, since the master illustrated in FIG. **64**H has a planar surface aligned with the top of the patterned structure, the copy would have the bottoms of the patterned structure aligned.

[0553] As an example, a replication process could be used to create a sub-master (with a complementary patterned structure), which can then be used to create a copy that reproduces the predetermined patterned structure from the master.

[0554] For a uniform diffraction efficiency, the diffractive optical element is spatially invariant. Embodiments of the present invention break the spatial invariance by introducing differing diffraction efficiencies as a function of lateral position. Accordingly, spatial coherence, which can lead to undesired effects, can be reduced. In other words, by introducing spatially non-uniform diffraction efficiencies, the interference effects that light experiences will be different in different regions, thereby modifying the interference effects and reducing the spatial coherence.

[0555] By adjusting the depth of the grating, it is possible to adjust the diffraction efficiency and produce a diffractive optical element characterized by a diffraction efficiency that varies in a predetermined manner as a function of position. Embodiments of the present invention can utilize either amplitude variation or phase variation to produce differences in the diffraction efficiency.

[0556] In an embodiment, the diffraction efficiency as a function of position is varied monotonically, for example, increasing the diffraction efficiency as light propagates further into the diffractive optical element. In this embodiment, since the intensity of light propagating in the diffractive optical element decreases as a function of position as a result of light being diffracted by the diffractive optical element, the increase in diffraction efficiency can result in an improvement in output uniformity. Thus, embodiments of the present invention provide for either monotonic variation or non-monotonic variation depending on the particular application. As a particular example, a random variation could be impressed on a monotonically increasing diffraction efficiency profile. Thus, although the diffraction efficiency will be generally increasing as light propagates into the diffractive optical element, the random variations will result in a diffraction efficiency profile that is non-monotonic. One of ordinary skill in the art would recognize many variations, modifications, and alternatives.

[0557] In some embodiments, the variation in diffraction efficiency is implemented in a predetermined manner such that variation in the diffraction efficiency (e.g., the region size) is on the order of the bounce spacing for light propagating in the planar waveguide. Thus, in some embodiments, for a waveguide thickness on the order of 0.3 mm, the bounce spacing will be on the order of 0.6 mm. Accordingly, if the region dimensions are on the order of 0.6 mm, light will experience a different diffraction efficiency after propagation by a distance of approximately two bounce spacings. As light propagates through the planar waveguide, partially diffracting off of the diffractive optical element during propagation, the varying diffraction efficiency will result in differing intensities being diffracted by the structure as propagation occurs. The spatial non-homogeneity produced using embodiments of the present invention, which can be random, thus reduces unwanted coherence effects.

[0558] FIG. **65** is simplified cross-sectional view of an incoupling grating according to an embodiment of the present invention. As discussed herein, the ICG couples the image light from the projector into the planar waveguide. In the embodiments illustrated in FIG. **65**, light propagates from the ICG towards the OPE. As illustrated in FIG. **65**, the grating structure utilized for the ICG is characterized by varying diffraction efficiency as a function of position, for example, lower diffraction efficiency in region **6520** and higher diffraction efficiency in region **6522**, providing an ICG with a graded diffraction efficiency across the ICG.

[0559] Referring to FIG. **65**, consider light incident on the side of the ICG farthest from the OPE, i.e., region **6522**. Light incident in this region re-encounters the ICG multiple times before leaving the grating region as illustrated by waveguide rays **6530**. Each time this light re-encounters the ICG, some portion of the light is diffracted by the ICG and exits the waveguide as illustrated by ray **6532**. This effect will decrease the amount of light propagating toward the OPE, and eventually to the user.

[0560] Accordingly, embodiments of the present invention utilize an ICG with a varying diffraction efficiency, for example, lower diffraction efficiency on the side of the ICG near the OPE (i.e., region **6520**), and higher diffraction efficiency on the side of the ICG farthest from the OPE (i.e., region **6522**). As light propagates in the waveguide from region **6522** toward the OPE, the decreasing diffraction efficiency of the ICG as the light approaches region **6520** will result in less light being diffracted out of the grating region. In addition to higher throughput to the OPE, some embodiments may also provide increased uniformity as certain incident angles will experience higher net incoupling efficiency. As the incoupling as a function of incident angle varies, the total uniformity of the ICG will improve. In one implementation, the grating height (or depth) would be graded, with the lower grating height in region **6520** near the OPE and higher grating depth in region **6522** farther from the OPE.

[0561] FIG. **66** is a simplified flowchart illustrating a method of fabricating a diffractive structure with varying diffraction efficiency according to an embodiment of the present invention. The method is used in conjunction with a substrate that is coated with a hard mask layer and a resist layer. The method **6600** includes exposing the resist layer to incident light through a graded transmittance mask (**6610**). The mask has a graded transmittance as a function of position, for example, high transmittance on a first side (e.g., the left side) and a low transmittance on a second side (e.g., the right side). The transmittance can be graded linearly or non-linearly.

[0562] It should be noted that in addition to gray scale lithography, other direct writing techniques, such e-beam lithography or laser writing, can be used to spatially control the dose distribution and are applicable to embodiments of the present invention. In these alternative approaches, **6610** can be replaced by the appropriate technique to provide the resist layer with a graded profile.

[0563] The method also includes developing the resist layer (**6612**). As a result of the exposure using the graded transmittance mask, the resist profile after exposure and development will be characterized by a height that is tapered from a thin value to a thicker value as a function of position. The method further includes etching of the resist/hard mask layer (**6614**). The tapered resist profile is transferred to the hard mask layer in this embodiment by "proportional RIE." In this process, the resist will delay the etching of the underlying material and the delay is proportional to the etch thickness. The ratio between the etching rate of the resist and the etching rate of the underlying material determines the vertical proportionality between the resist profile and the etched profile. Thus, the height difference present in the resist profile will be transferred to the hard mask layer, resulting in a hard mask layer with a tapered profile as the thickness of the hard mask layer varies as a function of position.

[0564] The method also includes forming a diffractive structure defined in a second resist layer deposited on the tapered hard mask layer (**6616**). The method further includes forming a tapered etch mask that includes the periodicity of the grating structure (**6618**). This tapered etch mask material will vary in thickness as a function of position. The method includes etching of the substrate using the tapered etch mask (**6620**). As will be evident to one of skill in the art, the resist layer can be removed before etching of the substrate. Thus, using embodiments of the present invention, a master is formed by transferring the height difference present in the tapered etch mask to the substrate, with a shallower etch (i.e., lower grating height) in one region (e.g., associated with the higher transmittance region of the gray scale mask) and a deeper etch (i.e., higher grating height) in a second region (associated with the lower transmittance region of the gray scale mask).

[0565] Thus, as illustrated, for example, in FIG. **60**G, embodiments of the present invention utilize a gray scale lithography process to form a master having a diffractive structure with a varying grating height and, as a result, varying diffraction efficiency, as a function of position.

[0566] In an alternative embodiment, the master is used to fabricate a sub-master (**6622**), which can be used in a replication process to imprint copies.

[0567] It should be appreciated that the specific steps illustrated in FIG. **66** provide a particular method of fabricating a diffractive structure with varying diffraction efficiency according to an embodiment of the present invention. Other sequences of steps may also be performed according to alternative embodiments. For example, alternative embodiments of the present invention may perform the steps outlined above in a different order. Moreover, the individual steps illustrated in FIG. **66** may include multiple sub-steps that may be performed in various sequences as appropriate to the individual step. Furthermore, additional steps may be added or removed depending on the particular applications. One of ordinary skill in the art would recognize many variations, modifications, and alternatives.

[0568] FIG. **67** is a simplified flowchart illustrating a method of fabricating a diffractive structure characterized by regions of differing diffraction efficiency according to an embodiment of the present invention. The method **6700** includes providing a substrate with a patterned hard mask (**6710**), which can be referred to as a substrate structure. As an example, the patterned hard mask can have a pattern associated with a diffractive optical element, which can be a diffraction grating with a predetermined periodicity (e.g., on the order of 200 nm to 400 nm) and height (e.g., on the order of 10 μm to 500 μm). In an embodiment, the patterned hard mask includes SiO_2. The method also includes performing a first lithography process comprising coating the substrate structure with a resist layer and removing at least a portion of the resist layer to form an exposed portion of the patterned hard mask (**6712**).

[0569] The method further includes performing a first etching process to extend grating features a first predetermined distance into the exposed portions of the substrate (**6714**). It is generally desirable to use a selective etch process that provides selectivity between the patterned hard mask and the substrate because of the multiple etch process steps utilized as discussed below.

[0570] The method includes performing a second lithography process to expose portions of the patterned hard mask that are different from the portions exposed during the first lithography process (**6716**). The exposed portions differ, but can share common areas. The method also includes performing a second etching process extend grating features a second predetermined distance into the exposed portions of the substrate (**6718**). In areas of the substrate in which the portion exposed in the first lithography process and the portion exposed in the second lithography process overlap, the grating features extend to a distance equal to the sum of the first predetermined distance and the second predetermined distance.

[0571] The method further includes, in some embodiments, performing a third lithography process to expose portions of the patterned hard mask that are different from the portions exposed during the second lithography process (**6720**) (and/or the first lithography process) and performing a third etching process extend grating features a third predetermined distance into the exposed portions of the substrate (**6722**).

[0572] Removal of the patterned hard mask provides a master with a predetermined patterned structure (**6724**). Accordingly, embodiments of the present invention provide an N-level etching process in which the depth of the grating features vary as a function of the number of etching levels and the lithography processes used to define the etched areas.

[0573] It should be appreciated that the specific steps illustrated in FIG. **67** provide a particular method of fabricating a diffractive structure characterized by regions of differing diffraction efficiency according to an embodiment of the present invention. Other sequences of steps may also be performed according to alternative embodiments. For example, alternative embodiments of the present invention may perform the steps outlined above in a different order. Moreover, the individual steps illustrated in FIG. **67** may include multiple sub-steps that may be performed in various sequences as appropriate to the individual step. Furthermore, additional steps may be added or removed depending on the particular applications. One of ordinary skill in the art would recognize many variations, modifications, and alternatives.

[0574] FIGS. **68**A-D are a simplified process flow diagram illustrating a process for fabricating variable diffraction efficiency gratings using gray scale lithography according to another embodiment of the present invention. As illustrated in FIGS. **68**A-D, gray scale lithography is utilized to form a diffractive structure (e.g., a diffraction grating) with varying

diffraction efficiency as a function of position. Referring to FIG. **68**A, mask **6807** is exposed to incident light **6805**. The mask **6807** has a graded transmittance as a function of position, for example, high transmittance on a first side (e.g., the left side) and a low transmittance on a second side (e.g., the right side). The transmittance can be graded linearly or non-linearly. In addition to gray scale lithography, other direct writing techniques, such e-beam lithography or laser writing, can be used to spatially control the dose distribution and are applicable to embodiments of the present invention.

[0575] Referring to FIG. **68**A, substrate **6810** and patterned hard mask **6820** (e.g., an SiO_2 hard mask) form a substrate structure. As an example, the patterned hard mask **6820** can have a pattern associated with a diffractive optical element, which can be a diffraction grating with a predetermined periodicity (e.g., on the order of 200 nm to 400 nm) and height (e.g., on the order of 10 μm to 500 μm). As described below, the use of materials with different properties, including etch rates, enables use of the patterned hard mask as a masking material. The substrate structure is coated with a resist layer **6814**.

[0576] Upon exposure using mask **6807**, the resist adjacent the portion of the mask with high transmittance (e.g., the left side) receives a higher dose than the resist adjacent portion of the mask with lower transmittance (e.g., the right side). FIG. **68**B illustrates the resist profile **6816** after exposure and development. Due to the higher dose received adjacent the portion of the mask with high transmittance, the height of the resist layer **6816** is tapered from a thin value to a thicker value as a function of position. Etching of the resist/patterned hard mask layer is then performed.

[0577] FIG. **68**C illustrates an etch profile after etching using the resist profile illustrated in FIG. **68**B. The resist profile is transferred to the patterned hard mask layer in this embodiment by "proportional RIE." In this process, the resist will delay the etching of the underlying material and the delay is proportional to the etch thickness. The ratio between the etching rate of the resist and the etching rate of the underlying material determines the vertical proportionality between the resist profile and the etched profile. As shown in FIG. **68**C, the height difference present in the resist profile has been transferred to the patterned hard mask layer producing a tapered hard mask **6830**, i.e., a hard mask layer with a tapered profile as the thickness of the hard mask layer varies as a function of position.

[0578] FIG. **68**D illustrates the formation of a diffractive structure in the substrate **6845** via a proportional etch process using the tapered hard mask layer. This etch process forms a tapered etch mask that includes the periodicity of the grating structure in a tapered etch mask material that varies in thickness as a function of position. As shown in FIG. **68**D, the height difference present in the tapered hard mask layer has been transferred to the substrate, with a shallower etch (i.e., lower grating height) in region **6850** (associated with the higher transmittance region of the gray scale mask) and a deeper etch (i.e., higher grating height) in region **6852**. As an example, the variation in height between grating teeth can vary over a predetermined range, for example, from 5 nm to 500 nm. Thus, as illustrated in FIG. **68**D, embodiments of the present invention utilize a gray scale lithography process to form a master having a diffractive structure with a varying grating height and, as a result, varying diffraction efficiency, as a function of position. Although a linear increase in grating height is illustrated in FIG. **68**D as a result of the linear transmittance variation in the gray scale mask, the present invention is not limited to this linear profile and other profiles having predetermined height variations are included within the scope of the present invention.

[0579] It should be noted that although a single variable height region is illustrated in FIG. **68**D, this single region should be considered in light of FIG. **59**B, which illustrates a plurality of regions of differing diffraction efficiency. The tapering of the grating height can thus be combined with a predetermined grating height associated with a particular region to provide variation in diffraction efficiency, both intra-region as well as inter-region. One of ordinary skill in the art would recognize many variations, modifications, and alternatives.

[0580] Referring to FIG. **68**D, the bottom of the grating lines are coplanar with plane **6861**. Accordingly, a sub-master can be fabricating using the master illustrated in FIG. **68**D and will have a complement of the grating lines present in the master. Accordingly, a sub-master can be created with a planar surface aligned with the tops of the grating structure.

[0581] FIG. **69** is a simplified flowchart illustrating a method of fabricating a diffractive structure with varying diffraction efficiency according to another embodiment of the present invention. The method **6900** includes providing a substrate with a patterned hard mask (**6910**), which can be referred to as a substrate structure. As an example, the patterned hard mask can have a pattern associated with a diffractive optical element, which can be a diffraction grating with a predetermined periodicity (e.g., on the order of 200 nm to 400 nm) and height (e.g., on the order of 10 μm to 500 μm). In an embodiment, the patterned hard mask includes SiO_2.

[0582] The method also includes exposing the resist layer to incident light through a graded transmittance mask (**6912**). The mask has a graded transmittance as a function of position, for example, high transmittance on a first side (e.g., the left side) and a low transmittance on a second side (e.g., the right side). The transmittance can be graded linearly or non-linearly.

[0583] It should be noted that in addition to gray scale lithography, other direct writing techniques, such e-beam lithography or laser writing, can be used to spatially control the dose distribution and are applicable to embodiments of the present invention. In these alternative approaches, **6912** can be replaced by the appropriate technique to provide the resist layer with a graded profile.

[0584] The method also includes developing the resist layer (**6914**). As a result of the exposure using the graded transmittance mask, the resist profile after exposure and development will be characterized by a height that is tapered from a thin value to a thicker value as a function of position. The method further includes etching of the resist/patterned hard mask layer (**6916**). The tapered resist profile is transferred to the patterned hard mask layer in this embodiment by "proportional RIE." In this process, the resist will delay the etching of the underlying material and the delay is proportional to the etch thickness. The ratio between the etching rate of the resist and the etching rate of the underlying material determines the vertical proportionality between the resist profile and the etched profile. Thus, the height difference present in the resist profile will be transferred to the partnered hard mask layer, resulting in a

patterned hard mask layer with a tapered profile as the thickness of the hard mask layer varies as a function of position.

[0585] The method further includes etching the substrate using the tapered hard mask layer (**6918**). Thus, using embodiments of the present invention, a master is formed by transferring the height difference present in the tapered, patterned hard mask layer to the substrate, with a shallower etch (i.e., lower grating height) in one region (e.g., associated with the higher transmittance region of the gray scale mask) and a deeper etch (i.e., higher grating height) in a second region (associated with the lower transmittance region of the gray scale mask).

[0586] Thus, as illustrated, for example, in FIG. **68**D, embodiments of the present invention utilize a gray scale lithography process to form a master having a diffractive structure with a varying grating height and, as a result, varying diffraction efficiency, as a function of position.

[0587] In an alternative embodiment, the master is used to fabricate a sub-master (**6920**), which can be used in a replication process to imprint copies.

[0588] It should be appreciated that the specific steps illustrated in FIG. **69** provide a particular method of fabricating a diffractive structure with varying diffraction efficiency according to another embodiment of the present invention. Other sequences of steps may also be performed according to alternative embodiments. For example, alternative embodiments of the present invention may perform the steps outlined above in a different order. Moreover, the individual steps illustrated in FIG. **69** may include multiple sub-steps that may be performed in various sequences as appropriate to the individual step. Furthermore, additional steps may be added or removed depending on the particular applications. One of ordinary skill in the art would recognize many variations, modifications, and alternatives.

Varying Refractive Indices

[0589] According to some embodiments of the present invention, films with varying index of refraction, which are suitable for use with diffractive elements as described herein, are formed using a drop on demand process, for example, inkjet printing of liquids, such as UV curable organic polymers, for instance using a jet and flash imprint lithography (J-FIL) process. These films with varying index of refraction can be formed by dispensing liquids spatially in the form of a 2D array, followed by patterning with a diffractive structure, for example, a diffraction grating structure, which may be referred to as relief feature. Embodiments disclosed herein provide flexibility in modulating the amplitude and phase of light propagating through the diffractive structure by utilizing imprinted materials of varying indices and controlled volume in combination with a desired waveguide diffraction structure pattern, which can be defined by a master template.

[0590] In one embodiment, the liquid is dispensed as drops, typically having a volume of 2-100 picoliters and ranging in diameter from about 10 μm to about 500 μm. These drops then spread to an area of several hundred microns and yield a film with a thickness in the range of ~5 nm to ~5 μm. In some embodiments, more than one liquid may be selectively dropped onto the substrate. For example, as will be described in further detail herein, multiple different liquids having different refraction indices may be used. As light travels through the film with varying index of refraction that is thus formed, interaction with the diffractive structures (e.g., during TIR through a high index waveguide layer) may cause the light to undergo modulation in amplitude and phase as discussed herein. This dithering of the index of refraction facilitates spreading of the light as it is coupled out of the diffractive structure, thereby controllably forming a virtual image with increased coherence. It should be noted that the methods and systems described herein to achieve a film with varying index of refraction enable spatial control over index of refraction. Selectively varying the index of refraction over different areas may reduce the potential negative impact of phase and amplitude modulation on other optical properties of the diffractive structure, including contrast of the image being displayed, while improving the overall uniformity and brightness.

[0591] FIG. **36**A is a simplified plan view diagram illustrating a diffractive element with a periodically varying index of refraction according to an embodiment of the present invention. In FIG. **36**A, diffractive element **3602** can be an OPE of an eyepiece that includes ICG **3601** and EPE **3603**. As illustrated in FIG. **36**A, different regions of diffractive element **3602** are characterized by differing indices of refraction resulting in modulated amplitude of light through diffractive element **3602**. Regions **3605** are characterized by a high index (e.g., n=1.65) and regions **3606** are characterized by a low index (e.g., n=1.52). These regions can be formed by dispensing controlled volume drops of material with high and low index in a 2D spatial pattern to form a layer that is subsequently imprinted with a diffractive structure such as a diffraction grating pattern. Upon imprinting, the layer of varying index of refraction will have a predetermined residual layer thickness (RLT) ranging in some embodiments from ~5 nm to ~5 μm.

[0592] In FIG. **36**A, region **3605** can be formed by placing drops of high index material using a drop on demand process such that after imprinting, the borders of region **3605** are formed in a generally rectangular layout. Region **3606** can be formed by placing drops of low index material using the drop on demand process in a similar manner. The arrays of drops consisting of higher index material (e.g., n=1.65) can have drop dimensions on the order of ~10 μm to ~100 μm in diameter and can be arrayed so that regions **3605** have dimensions on the order of 0.5 mm to 5 mm. The array of lower index material regions (e.g., n=1.52) are formed in a similar manner. When imprinted, the drops in the sets of arrays spread and bond to the boundary of adjacent arrays to form a continuous film with regions of varying index of refraction. The drop on demand processes enable control of the volume and the film thickness in which the diffractive structures are imprinted. Although embodiments of the present invention are discussed in terms of the imprinting of diffractive structures in the varying index film, it should be noted that the present invention is not limited to this design and planar surfaces can abut the varying index film as discussed in relation to FIG. **36**E. The diffractive structures can include nano-features including gratings, holes, pillars, and the like.

[0593] Although an example of diffractive element **3602** is an OPE, the variation in index of refraction can be utilized in additional diffractive elements making up an eyepiece, including the ICG and the EPE or other diffractive elements. For example, in the OPE, the variation may be random, whereas in the EPE, specific areas may be designated for variation in refraction. One of ordinary skill in the art would

recognize many variations, modifications, and alternatives. Moreover, although only two index of refraction materials are illustrated in this and other embodiments, the present invention is not limited to the use of only two materials, but can utilize additional numbers of materials with varying indices of refraction. As an example, three or four different materials can be utilized in some embodiments. Typically, embodiments of the utilize materials used have refraction indices ranging from about 1.49 to about 1.7.

[0594] FIG. **36**K is a simplified side view diagram illustrating a variable index of refraction structure for a diffractive element according to an embodiment of the present invention. As illustrated in FIG. **36**K, a plurality of regions of a high index of refraction **3605** are interspersed on a substrate **3609** with a plurality of regions of a low index of refraction **3606** in relation to the regions of high index of refraction. A diffractive structure **3607**, which can include, for example, a plurality of diffractive elements **3608** (e.g., grating elements), is disposed adjacent the regions **3605** and **3606**. In some embodiments, the template used to imprint the diffractive structure planarizes regions **3605** and **3606** to provide a uniform thickness film T on the order of a few nanometers to thousands of nanometers, e.g., 5 nm to 1,000 nm, for instance, 10 nm to 100 nm as a function of position on the substrate as discussed in relation to FIG. **36**A.

[0595] As will be evident to one of skill in the art, the drawing is not to scale since the width W of regions **3605** and **3606** can be on the order of 0.5 mm-5 mm, whereas the pitch of grating elements **3608** can be on the order of 300 nm to 1500 nm. Additionally, as will be evident to one of skill in the art, embodiments of the present invention are not limited to two different indices of refraction and the regions of differing index of refraction can be made up of three or more different indices of refraction. Moreover, although a diffractive structure is imprinted on the regions of differing index of refraction, the diffractive structure can be replaced with a planar structure. In both implementations, embodiments of the present invention provide a predetermined geometry of varying index of refraction with a controllable film thickness. The pitch of the diffractive structure can be varied as a function of position as discussed in other embodiments of the present invention.

[0596] FIG. **36**B is a simplified plan view diagram illustrating a diffractive element with a distributed variation in index of refraction according to an embodiment of the present invention. In contrast with the arrayed regions in FIG. **36**A, the illustrated embodiment includes a diffractive element **3610** having a set of high index of refraction islands **3611** interspersed within a background of low index of refraction material **3612**. As discussed above, the set of high index of refraction islands **3611** and the surrounding low index of refraction material **3612** can be characterized by a uniform thickness as a function of position, providing a film of uniform thickness but having varying indices of refraction as a function of position. The variation in index of refraction can be characterized by a consistent distribution (e.g., by uniformly spacing the high index of refraction islands **3611**) or by a non-consistent distribution (e.g., by a random or semi-random spacing of the high index of refraction islands). As discussed above, although only two index of refraction materials are illustrated in this embodiment, the present invention is not limited to the use of only two materials, but can utilize additional numbers of materials with varying indices of refraction. As an example, two or more different materials can be utilized to form the islands dispersed in the surrounding material.

[0597] According to some embodiments, the lateral dimensions of the high index of refraction islands **3611** measured in the plane of the figure are on the order of tens of microns to thousands of microns, e.g., 0.5 mm-5 mm. As discussed in relation to FIG. **36**K, the thickness T of the high index of refraction islands **3611** and the surrounding low index of refraction material **3612** is on the order of a few nanometers to thousands of nanometers, e.g., 5 nm to 1,000 nm, for instance, 10 nm to 100 nm.

[0598] FIG. **36**C is a simplified plan view diagram illustrating a set of diffractive elements varying index of refraction according to an embodiment of the present invention. In a manner similar to that illustrated in FIG. **36**B, diffractive element **3610** includes a set of high index of refraction islands **3611** interspersed with a surrounding low index of refraction material **3612**. In addition to the variation of index of refraction present in diffractive element **3610**, additional diffractive element **3615** may include regions with differing indices of refraction. For example, FIG. **36**C shows an additional diffractive element **2615** that includes a low index of refraction central region **3616** and a set of high index of refraction peripheral regions **3617**. As an example, diffractive element **3610** can be an OPE and additional diffractive element **3615** can be an EPE of an eyepiece.

[0599] In some diffractive element designs, the intensity of light outcoupled at the edges or corners of the element may be less than the intensity outcoupled at central portions of the element, thereby impacting image quality. The set of peripheral regions **3617**, which are characterized by a high index of refraction, increase the coupling coefficient of the diffractive structure with respect to the central portion, resulting in increased outcoupling in these peripheral regions **3617**, which can improve image uniformity. In some embodiments, regions having high index or refraction may be asymmetric. For example, in some embodiments, larger or differently shaped regions may be used having high index of refraction in areas of the diffractive element furthest from a light source.

[0600] The diffractive element **3610** and the additional diffractive element **3615** can be imprinted at the same time and can have different diffractive structures, for example, diffraction gratings with different periodicities and orientations. One of ordinary skill in the art would recognize many variations, modifications, and alternatives.

[0601] FIG. **36**D is a simplified plan view diagram illustrating a set of diffractive elements having different uniform index of refractions according to an embodiment of the present invention. In this embodiment, a first diffractive element **3620** (e.g., an ICG) can have a uniform high index of refraction while second and third diffractive elements **3621** and **3622** (e.g., an OPE and an EPE, respectively), have a uniform low index of refraction. In this design, the eyepiece including these three diffractive elements will have, in the same plane, diffractive elements with differing index of refraction, and as a result, differing coupling coefficients. In this example, the high index of refraction material in the ICG will provide for high coupling efficiency from the projector into the eyepiece and different (e.g., lower) coupling efficiencies for the OPE and EPE. Since all three diffractive elements can be imprinted concurrently, the film thickness can be uniform as a function of position, providing unique benefits including high brightness as a

result of the differing indices of refraction that are not available using conventional techniques.

[0602] It should be noted that embodiments of the present invention provide combinations of the techniques described herein. As an example, a high index of refraction material with a uniform spatial profile as a function of position can be provided in the ICG to increase the diffractive coupling, a varied index of refraction spatial profile as a function of position can be provided in the OPE to provide a dithering effect, and a uniform spatial profile as a function of position can be provided in the EPE. Other combinations are also included with the scope of the present invention. Accordingly, each of the elements of the eyepiece can be optimized for their particular function using embodiments of the present invention.

[0603] FIG. **36**E is a simplified flowchart **3630** illustrating a method of fabricating a diffractive element with varying index of refraction according to an embodiment of the present invention. The method includes providing a substrate (**3632**). The method further includes defining at least one first region and at least one second region on the substrate (**3634**).

[0604] The method further includes dropping a first material onto the first region (**3636**). The method further includes dropping a second material onto the second region (**3638**). The first material and the second material may be dropped as controlled volume droplets in some embodiments. The second material may have a lower refractive index than the first material. For example, the first material may have a refractive index of n=1.65, whereas the second material may have a refractive index of n=1.52. In some embodiments, the first material and the second material may have lower refractive indices than the substrate.

[0605] The method further includes imprinting the first material and the second material with a diffractive structure to form the diffractive element (**3639**). The diffractive element may be or include, for example, an OPE, an EPE, and/or an ICG. For different diffractive elements, however, the variation in refractive indices may be different. For example, in the OPE, the variation may be random, whereas in the EPE, specific area may be designated for variation in refraction. In some embodiments, more than one diffractive element may be fabricated in a single process.

[0606] The diffractive structure may include, for example, one or more grating patterns, hole, and/or pillar patterns (i.e., a constant, varying, or random pattern). When imprinted, the drops of the first material and the drops of the second material may spread and bond to the boundary of adjacent drops to form a continuous film with regions of varying indices of refraction. Upon imprinting, the first material and the second material may have a predetermined residual layer thickness (RLT) ranging in some embodiments from ~5 nm to ~5 μm.

[0607] According to the method described with respect to flowchart **3630**, a diffractive element having varying refractive indices may be obtained. By implementing varying refractive indices, a more uniform spread of light through the diffractive element may be obtained, enabling control over image coherence over the desired field of view. Furthermore, this method of manufacture may be more inexpensive and less time consuming than contact nanoimprint lithography processes.

[0608] It should be appreciated that the specific steps illustrated in FIG. **36**E provide a particular method of fabricating a diffractive element with varying index of refraction according to an embodiment of the present invention. Other sequences of steps may also be performed according to alternative embodiments. For example, alternative embodiments of the present invention may perform the steps outlined above in a different order. Moreover, the individual steps illustrated in FIG. **36**E may include multiple sub-steps that may be performed in various sequences as appropriate to the individual step. Furthermore, additional steps may be added or removed depending on the particular applications. One of ordinary skill in the art would recognize many variations, modifications, and alternatives.

[0609] Another method for forming a variable refraction index film is disclosed herein. A liquid resist having nanoparticles therein may be dropped onto a substrate. The liquid component of the resist may have a lower viscosity than the nanoparticle component, allowing different rates of spreading between the resist components when imprinting occurs.

[0610] FIG. **36**F is an image illustrating a film of varying index of refraction abutting a planar substrate according to an embodiment of the present invention. The film illustrated in FIG. **36**F includes a plurality of regions of high and low index of refraction materials. In order to fabricate this film, a high index liquid including components of varying index of refraction was provided. As an example, a fluid (e.g., photoresist) including nanoparticles (e.g., titanium oxide, zirconium oxide, or the like) having an index of refraction higher than the index of refraction of the fluid can be used. For instance, the fluid may be a photoresist with an index of refraction of 1.50 and nanoparticles in the fluid may have an index of refraction of 2.0. The high index nanoparticles are preferably uniformly distributed in the fluid with minimal agglomeration to facilitate inkjet dispensing and later imprinting with diffractive structures. The presence of the high index of refraction nanoparticles results in the fluid/nanoparticle mixture having a higher index of refraction than the fluid component alone. Alternatively, a fluid with different constituents can be used. In some embodiments, constituents may include long molecular chain polymers or highly functionalized polymers with a high index of refraction and shorter molecular chain polymers or lightly functionalized polymers with a lower index of refraction can be utilized. In some embodiments, the surface tension of the materials are varied to result in differing indices of refraction. One of ordinary skill in the art would recognize many variations, modifications, and alternatives.

[0611] After initial deposition by the drop on demand process, the drops, which initially may have a diameter of 10 μm-100 μm, will spread to form a film with a range in the hundreds of nanometers or less. As the drop spreads, an index of refraction variation is created, which may be related, without limiting the present invention, to a liquid phase diffusion process similar to a liquid phase chromatography process. In other words, as the drop spreads to a thin film with a thickness that is small (e.g., at the nanometer scale) in comparison with the lateral dimensions (e.g., at the micron scale), phase separation of the material occurs such that the center of the initial drop is characterized by a higher concentration of the nanoparticles than the peripheral portions of the drop after spreading. Accordingly, the peripheral portions are characterized by a lower concentration of nanoparticles. The non-uniform distribution of nanoparticles as a volume fraction results in a non-uniform index of refraction as a function of position in the drop after spread-

ing. When the material in the film is cured, a solid patterned film of varying index of refraction is thus formed. Diffraction structures can be imprinted on the solid patterned film as described herein.

[0612] Referring to FIG. **36**F, the image is associated with a film 90 nm in thickness. The central portion **3642** is associated with the location at which the drop was initially deposited and the peripheral portion **3644** is associated with the locations to which the drop spreads. As a result of the liquid phase diffusion process, the index of refraction in the central portion **3642** including a higher concentration of nanoparticles is 1.69, whereas in the peripheral portion **3644** where adjacent drops merge and the concentration of nanoparticles is lower, the index of refraction is 1.61. Initially, the index of refraction of the drop was 1.64. The planar substrate abutting the varying index of refraction film results in generally uniform spreading of the drops, which are generally circular in shape after spreading. As will be evident to one of skill in the art, the diffraction structure imprinted on top of the film is not visible at the image scale since the periodicity on the diffraction structure is on the sub-micron scale.

[0613] Control of the positions of the regions of varying index of refraction is provided by predetermined placement of drops of controlled volume. The positions can be arrayed uniformly or varied in a random or semi-random manner as appropriate to the particular application. In some implementations, both uniform arrays and random or semi-random distribution can be combined to provide the desired variation in index of refraction as a function of position. Placement of drops close to each other can result in a merged region in which several drops are combined, enabling regions of predetermined dimensions. One of ordinary skill in the art would recognize many variations, modifications, and alternatives.

[0614] FIG. **36**G is an image illustrating a film of varying index of refraction abutting a diffractive substrate according to an embodiment of the present invention. In FIG. **36**G, an ICG is illustrated with drops that have spread into regions several hundred microns on a side. Central portions **3646** associated with the location at which the drop was initially deposited are characterized by a high index of refraction and peripheral portions **3648** associated with the locations to which the drop spreads and adjacent drops merge are characterized by a lower index of refraction. The diffraction structure imprinted on top of the film is not visible at the image scale since the periodicity on the diffraction structure is on the sub-micron scale. However, the presence of the diffraction structure is illustrated by the generally oval shape of the drops after spreading since the diffractive elements (e.g., grating lines) support fluid flow parallel to the direction of the diffractive elements (e.g., grating lines) preferentially with respect to fluid flow perpendicular to the diffractive elements (e.g., grating lines). In the illustrated embodiment, the diffraction structure has diffractive elements arrayed in a generally vertical direction, enabling higher fluid flow in the vertical direction than in the horizontal direction.

[0615] FIG. **36**H is an image illustrating a film of varying index of refraction in a first diffractive element according to an embodiment of the present invention. In FIG. **36**H, an OPE is illustrated with drops that have spread into regions several hundred microns on a side. Central portions **3652** associated with the location at which the drop was initially deposited are characterized by a high index of refraction and peripheral portions **3654** associated with the locations to which the drop spreads and adjacent drops merge are characterized by a lower index of refraction. The presence of the diffraction structure is illustrated by the generally oval shape of the drops after spreading since the diffractive elements (e.g., grating lines) support fluid flow parallel to the direction of the grating lines preferentially with respect to fluid flow perpendicular to the grating lines. In the illustrated embodiment, the diffraction structure has diffractive elements arrayed at an angle of approximately 45 degrees to the vertical direction, enabling higher fluid flow along the direction ~45 degrees to the vertical direction.

[0616] FIG. **36**I is an image illustrating a film of varying index of refraction in a second diffractive element according to an embodiment of the present invention. In FIG. **36**H, an EPE is illustrated with drops that have spread into regions several hundred microns on a side. Central portions **3656** associated with the location at which the drop was initially deposited are characterized by a high index of refraction and peripheral portions **3658** associated with the locations to which the drop spreads and adjacent drops merge are characterized by a lower index of refraction. The presence of the diffraction structure is illustrated by the generally oval shape of the drops after spreading since the diffractive elements (e.g., grating lines) support fluid flow parallel to the direction of the grating lines preferentially with respect to fluid flow perpendicular to the grating lines. In the illustrated embodiment, the diffraction structure has diffractive elements has diffractive elements arrayed in a generally horizontal direction, enabling higher fluid flow in the horizontal direction than in the vertical direction.

[0617] FIG. **36**J is a simplified flowchart **3660** illustrating a method of fabricating a diffractive element with varying index of refraction according to an embodiment of the present invention. The method includes providing a substrate (**3662**). In some embodiments, the substrate may have a high or low refractive index (e.g., n=1.8 or n=1.5). The method further includes defining at least one region on the substrate (**3664**).

[0618] The method further includes providing a liquid resist material (**3666**). The method further includes dispersing particles into the liquid resist material to form a solution (**3668**). The particles may be uniformly distributed in the liquid resist material and may not agglomerate within the liquid resist material. In some embodiments, the solution may have a refractive index of n=1.65 or higher. The particles may be, for example, nanoparticles, such as titanium oxide nanoparticles.

[0619] The method further includes dropping the solution in the at least one region on the substrate (**3670**). The solution may be dropped as controlled volume droplets in some embodiments. The drops may be, for example, 4 pL (~10 μm diameter) drops. In some embodiments, the solution may have a higher refractive index than the substrate.

[0620] The method further includes imprinting the solution with a diffractive structure to form the diffractive element (**3672**). In some embodiments, the drops of the solution may be imprinted to a certain residual layer thickness (e.g., 100 nm), causing phase separation. This imprinting process may cause the solution to experience liquid chromatography, such that the solution is separated out into separate zones. Individual zones may be richer in nanopar-

ticles than other zones due to refractive index variation within each drop as it is spreading.

[0621] The diffractive element may be or include, for example, an OPE, an EPE, and/or an ICG. For different diffractive elements, however, the variation in refractive indices may be different. For example, in the OPE, the variation may be random, whereas in the EPE, specific areas may be designated for variation in refraction. In some embodiments, more than one diffractive element may be fabricated in a single process.

[0622] The diffractive structure may include, for example, one or more grating patterns (i.e., a constant, varying, or random grating pattern). When imprinted, the drops of the solution may spread and bond to the boundary of adjacent drops to form a continuous film with regions of varying indices of refraction.

[0623] According to the method described with respect to flowchart **3660**, a diffractive element having varying refractive indices may be obtained. A phase varying pattern may be created for light exiting through or interacting at the surface of the diffractive element. By implementing varying refractive indices, a more uniform spread of light through the diffractive element may be obtained, enabling control over image coherence over the desired field of view. Furthermore, this method of manufacture may be more inexpensive and less time consuming than contact nanoimprint lithography processes.

[0624] It should be appreciated that the specific steps illustrated in FIG. **36**J provide a particular method of fabricating a diffractive element with varying index of refraction according to an embodiment of the present invention. Other sequences of steps may also be performed according to alternative embodiments. For example, alternative embodiments of the present invention may perform the steps outlined above in a different order. Moreover, the individual steps illustrated in FIG. **36**J may include multiple sub-steps that may be performed in various sequences as appropriate to the individual step. Furthermore, additional steps may be added or removed depending on the particular applications. One of ordinary skill in the art would recognize many variations, modifications, and alternatives.

[0625] FIG. **36**L is a simplified side view diagram illustrating a multi-layer variable index of refraction structure for a diffractive element according to an embodiment of the present invention. Referring to FIG. **36**L, a plurality of regions of high index of refraction material **3682** are disposed on a substrate **3680**. The plurality of regions of high index of refraction material can be formed using the drop on demand processes discussed herein. An additional layer of low index of refraction material **3684** is deposited over the plurality of regions of high index of refraction material **3682**. Diffractive structure **3686** is imprinted in the additional layer of low index of refraction material. In some embodiments, the thickness of the plurality of regions of high index of refraction material is controlled to a predetermined thickness, for example, by spreading initial drops using a planar surface abutting the drops to form the film. In other embodiments, a single imprinting process is used to control the thickness of both the plurality of regions of high index of refraction material and the additional layer of low index of refraction material. One of ordinary skill in the art would recognize many variations, modifications, and alternatives.

[0626] FIG. **70** illustrates schematically a partial cross-sectional view of a structure of an eyepiece **7000** according to some embodiments of the present invention. The region shown in the cross-sectional view corresponds to the EPE region **2009** of eyepiece **2000** as illustrated in FIG. **20**. As shown in FIG. **70**, the eyepiece **7000** may include a first planar waveguide **7020**, a second planar waveguide **7030**, and a third planar waveguide **7040**. Each waveguide **7020**, **7030**, or **7040** may lie in an X-Y plane in a Cartesian coordinate system, as illustrated in FIG. **70** (the Y-axis points into the page). Each waveguide **7020**, **7030**, or **7040** has a back surface facing the viewer's eye **7002**, and a front surface facing the opposite direction. The eyepiece **7000** may also include a back cover **7010**, and a front cover **7050**.

[0627] The eyepiece **7000** may also include a first grating **7024** disposed on the back surface of the first waveguide **7020**, a second grating **7034** disposed on the back surface of the second waveguide **7030**, and a third grating **7044** disposed on the back surface of the third waveguide **7040**. The first grating **7024** may be configured to diffract a first portion of the light propagating in the first waveguide **7020** toward the viewer's eye **7002** (e.g., substantially along the positive Z-axis). Similarly, the second grating **7034** may be configured to diffract a first portion of the light propagating in the second waveguide **7030** toward the viewer's eye **7002**, and the third grating **7044** may be configured to diffract a first portion of the light propagating in the third waveguide **7040** toward the viewer's eye **7002**. In this configuration, each of the first grating **7024**, the second grating **7034**, and the third grating **7044** may be said to be operating in transmission mode, as it is a transmission diffractive order that is directed toward the viewer's eye.

[0628] The first grating **7024** may also diffract a second portion of the light propagating in the first waveguide **7020** (i.e., a reflection diffractive order) away from the viewer's eye **7002** (e.g., substantially along the negative Z-axis). Similarly, the second grating **7034** may diffract a second portion of the light propagating in the second waveguide **7030** away from the viewer's eye **7002**, and the third grating **7044** may diffract a second portion of the light propagating in the third waveguide **7040** away from the viewer's eye **7002**.

[0629] Although FIG. **70** illustrates gratings **7024**, **7034**, and **7044** formed on the back surfaces of the waveguides **7020**, **7030**, and **7040**, respectively, this is not required by the present invention. In some embodiments, the gratings or other diffractive structures, including diffractive optical elements, are formed on the inner side of the back surface, the outer side of the back surface, or disposed inside the waveguide and positioned at a predetermined distance from the back surface. Accordingly, when reference is made to diffractive structures formed on the back surface, this should be understood to include diffractive structures formed inside the waveguide adjacent the back surface. One of ordinary skill in the art would recognize many variations, modifications, and alternatives.

[0630] In some embodiments, each waveguide **7020**, **7030**, or **7040**, as well as each grating **7024**, **7034**, or **7044**, may be wavelength selective, such that it selectively propagates or diffract light in a given wavelength range. In some embodiments, each of the waveguides **7020**, **7030**, and **7040** may be configured for a respective primary color. For example, the first waveguide **7020** may be configured for propagating red (R) light, the second waveguide **7030** may

be configured for propagating green (G) light, and the third waveguide **7040** may be configured for propagating blue (B) light. It will be appreciated that the eyepiece **7000** may include two or more waveguides for red light, two or more waveguides for green light, and two or more waveguides for blue light, for different depth planes, as described above. In some other embodiments, other colors, including magenta and cyan, may be used in addition to or may replace one or more of red, green, or blue. One of skill in the art will also appreciate alternative orderings of the waveguides **7020**, **7030**, and **7040**.

[0631] It will be appreciated that references to a given color of light in this disclosure will be understood to encompass light of one or more wavelengths within a range of wavelengths that are perceived by a viewer as being of that given color. For example, red light may include light in the wavelength range of about 620-780 nm; green light may include light in the wavelength range of about 492-577 nm, and blue light may include light in the wavelength range of about 435-493 nm.

[0632] In some embodiments, each grating **7024**, **7034**, or **7044** may comprise a surface relief grating, such as a binary or two-level metasurface phase grating or the like. For a two-level phase grating, the diffraction efficiency in a transmission order may be substantially the same as the diffraction efficiency in a reflection order. Thus, about an equal amount of virtual image light may be out-coupled from each waveguide **7020**, **7030**, or **7040** toward the viewer's eye **7002** and away from the viewer's eye **7002**. Even for blazed gratings (e.g., three-level metasurface phase gratings), a substantial amount of virtual image light may still be out-coupled away from the viewer's eye **7002**. Therefore, it may be desirable to redirect at least some of the virtual image light directed away from the viewer's eye **7002** back toward the viewer's eye **7002** in order to enhance the brightness of a virtual image. At the same time, it may be desirable to transmit as much natural light from the world as possible toward the viewer's eye **7002**.

[0633] According to some embodiments, the eyepiece **7000** may include a first wavelength-selective reflector **7026** disposed at the front surface of the first waveguide **7020** for reflecting at least a portion of the virtual image light diffracted by the first grating **7024** away from the viewer's eye **7002** back toward the viewer's eye. Similarly, the eyepiece **7000** may include a second wavelength-selective reflector **7036** disposed at the front surface of the second waveguide **7030**, and a third wavelength-selective reflector **7046** disposed at the front surface of the third waveguide **7040**.

[0634] Each wavelength-selective reflector **7026**, **7036**, or **7046** may be configured to reflect light of a given color and transmit light in other wavelengths. For example, the first wavelength-selective reflector **7026** may be configured to reflect red light; the second wavelength-selective reflector **7036** may be configured to reflect green light; and the third wavelength-selective reflector **7046** may be configured to reflect blue light. As such, part of the virtual image in red light diffracted by the first grating **7024** away from the viewer's eye **7002** (i.e., substantially in the negative Z-axis) may be reflected by the first wavelength-selective reflector **7026** back toward the viewer's eye **7002** (i.e., substantially in the positive Z-axis). Similarly, part of the virtual image in green light diffracted by the second grating **7034** away from the viewer's eye **7002** may be reflected by the second wavelength-selective reflector **7036** back toward the viewer's eye **7002**, and part of the virtual image in blue light diffracted by the third grating **7044** away from the viewer's eye **7002** may be reflected by the third wavelength-selective reflector **7046** back toward the viewer's eye **7002**.

[0635] As discussed above, if the wavelength-selective reflectors **7026**, **7036**, and **7046** are properly aligned with respect to the gratings **7024**, **7034**, and **7044** (which may be achieved if the front surface and the back surface of each waveguide **7020**, **7030**, and **7040** are parallel to each other), ghost images may be avoided and the brightness of a virtual image may be enhanced.

[0636] FIG. **71** illustrates schematically some exemplary reflectance spectra of the first wavelength-selective reflector **7026**, the second wavelength-selective reflector **7036**, and the third wavelength-selective reflector **7046**, according to some embodiments of the present invention. As illustrated, the first wavelength-selective reflector **7026** may be characterized by a first reflectance spectrum **7122** having a reflectance peak in the red wavelength region, the second wavelength-selective reflector **7036** may be characterized by a second reflectance spectrum **7132** having a reflectance peak in the green wavelength region, and the third wavelength-selective reflector **7046** may be characterized by a third reflectance spectrum **7142** having a reflectance peak in the blue wavelength region.

[0637] Because of the relatively narrow reflectance bands of the wavelength-selective reflectors **7026**, **7036**, and **7046**, the eyepiece **7000** may strongly reflect virtual image light in the selected wavelength ranges, and transmit light in all other wavelength ranges. Therefore, natural light from the world outside the reflectance bands of the wavelength-selective reflectors can still reach the viewer's eye. For example, the first wavelength-selective reflector **7026** may strongly reflect virtual image light in the red wavelength range and transmit light in other wavelengths, including natural light from the world in the other wavelengths as well as green and blue virtual image light diffracted by the second grating **7034** and the third grating **7044**, respectively. Similarly, the second wavelength-selective reflector **7036** may strongly reflect virtual image light in the green wavelength range and transmit light in other wavelengths, including natural light from the world in the other wavelengths as well as blue virtual image light diffracted by the third grating **7044**; and the third wavelength-selective reflector **7046** may strongly reflect virtual image light in the blue wavelength range and transmit light in other wavelengths, including natural light from the world in the other wavelengths.

[0638] In some embodiments, reflectance as high as 100% may be achieved within a selected spectral band. Therefore, it may be possible to nearly double the intensity of a virtual image without a reflector. In addition, as world light in the wavelength ranges of the virtual image are reflected away from the viewer's eye **7002**, the virtual image may be perceived by the viewer with higher contrast.

[0639] In some embodiments, each wavelength-selective reflector **7026**, **7036**, or **7046** may be advantageously designed such that the band width of its reflectance spectrum substantially matches the spectral width of the corresponding LED in the projector **2001** illustrated in FIG. **20**. In some other embodiments, the projector **2001** may use laser sources instead of LEDs. Laser sources may have much narrower emission bands than those of LEDs. In those cases, each wavelength-selective reflector **7026**, **7036**, or **7046**

may be configured to have a narrower band width, such as that represented by the reflectance curve **7124**, **7134**, or **7144** illustrated in FIG. **71**.

[0640] Because the reflectance spectrum of a wavelength-selective reflector may shift as a function of angle of incidence, there may be a tradeoff between wavelength spectral width and angular spectral width. In some embodiments, each wavelength-selective reflector **7026**, **7036**, or **7046** may be configured to have a wider band width in order to accommodate a wider field of view.

[0641] FIG. **72** illustrates schematically a partial cross-sectional view of a structure of an eyepiece **7200** according to some other embodiments of the present invention. Similar to the eyepiece **7000**, the eyepiece **7200** may include a first waveguide **7220**, a second waveguide **7230**, and a third waveguide **7240**, as well as a back cover **7210** and a front cover **7250**.

[0642] The eyepiece **7200** further includes a first grating **7224** disposed on the front surface of the first waveguide **7220**, a second grating **7234** disposed on the front surface of the second waveguide **7230**, and a third grating **7244** disposed on the front surface of the third waveguide **7240**. In this configuration, each of the first grating **7224**, the second grating **7234**, and the third grating **7244** may be said to be operating in reflection mode, as it is the reflection diffractive order that is directed toward the viewer's eye.

[0643] The eyepiece **7200** may further include a first wavelength-selective reflector **7226** disposed on the back surface of the second waveguide **7230**. The first wavelength-selective reflector **7226** may be optimized for red light so that part of the virtual image in red light diffracted by the first grating **7224** away from the viewer's eye **7202** may be reflected by the first wavelength-selective reflector **7226** back towards the viewer's eye **7202**. Similarly, the eyepiece **7200** may further include a second wavelength-selective reflector **7236** optimized for green light disposed on the back surface of the third waveguide **7240**, and a third wavelength-selective reflector **7246** optimized for blue light disposed on the back surface of the front cover **7250**. One of skill in the art will appreciate alternative pairings or combinations of wavelength-selective reflectors on a particular waveguide or cover.

[0644] In this configuration, it may be more important to ensure that the wavelength-selective reflectors **7226**, **7236**, and **7246** are properly aligned with respect to the gratings **7224**, **7234**, and **7244**, respectively, in order to avoid ghost images.

[0645] FIG. **73** illustrates schematically a cross-sectional view of a structure of an eyepiece **7300** according to some other embodiments of the present invention. Similar to the eyepiece **7000**, the eyepiece **7300** may include a first waveguide **7320**, a second waveguide **7330**, and a third waveguide **7340**, as well as a back cover **7310** and a front cover. The eyepiece **7300** may further include a first grating **7324** disposed on the back surface of the first waveguide **7320**, a second grating **7334** disposed on the back surface of the second waveguide **7330**, and a third grating **7344** disposed on the back surface of the third waveguide **7340**.

[0646] Here, instead of having a wavelength-selective reflector on each of the waveguides **7320**, **7330**, and **7340**, the eyepiece **7300** may include a wavelength-selective reflector **7356** disposed at a back surface of the front cover **7350**. The wavelength-selective reflector **7356** may be configured to have a reflectance spectrum that exhibits three reflectance peaks in wavelength ranges corresponding to red light, green light, and blue light, as illustrated in FIG. **71**. Alternatively, the wavelength-selective reflector **7356** may be disposed on the front surface of the third waveguide **7340**.

[0647] In some other embodiments, long-pass filters and short-pass filters may be used in place of the narrow-band reflectors. FIG. **74** illustrates schematically exemplary reflectance spectra of a long-pass filter and a short-pass filter. The reflectance curve **7450** represents a long-pass filter which reflects most of the light below about 470 nm, and transmits most of the light above about 470 nm. Thus, the long-pass filter may reflect blue light and transmit green and red light. The reflectance curve **7452** represents a short-pass filter which reflects most of the light above about 590 nm, and transmits most of the light below about 590 nm. Thus, the short-pass filter may reflect red light and transmit green and blue light. The long-pass filter and the short-pass filter may be disposed on appropriate waveguides **7320**, **7330**, and **7340**, and/or the front cover **7350** to achieve desired wavelength selectivity. One of ordinary skill in the art would appreciate various combinations or alternate wavelength thresholds for reflecting or transmitting through a long-pass or short-pass filter.

[0648] In some embodiments, each wavelength-selective reflector **7026**, **7036**, or **7046** (as illustrated in FIG. **70**), **7226**, **7236**, or **7246** (as illustrated in FIG. **72**), or **7356** (as illustrated in FIG. **73**) may exhibit polarization-dependent reflectance spectra. In cases where the light provided by the LEDs or lasers in the projector **2001** is substantially linearly polarized or circularly polarized, the wavelength-selective reflectors may be designed to have high reflectance for light of that polarization state, and transmit light of the orthogonal polarization state, thus allowing natural light from the world in the orthogonal polarization state to come through the eyepiece **7000**, **7200**, or **7300**.

[0649] According to various embodiments, each wavelength-selective reflector illustrated in FIGS. **70**, **72**, and **73** may comprise a multilayer thin film or a metasurface. A multilayer thin film may comprise a periodic layer system composed from two materials, one with a high refractive index and the other one with a low refractive index. This periodic system may be engineered to significantly enhance the reflectivity in a desired wavelength range, whose width is determined by the ratio of the two indices only, while the maximum reflectivity may be increased up to nearly 100% with increasing number of layers in the stack. The thicknesses of the layers are generally quarter-wave, designed such that reflected beams constructively interfere with one another to maximize reflection and minimize transmission.

[0650] A metasurface is an optically thin subwavelength structured interface. Metasurfaces are generally created by assembling arrays of miniature, anisotropic light scatterers (i.e., resonators such as optical antennas). The spacing between antennas and their dimensions are much smaller than the wavelength. The metasurfaces, on account of Huygens principle, are able to mold optical wavefronts into arbitrary shapes with subwavelength resolution by introducing spatial variations in the optical response of the light scatterers. Metasurfaces may allow controlling the polarization, phase and amplitude of light. The factors that can be used to manipulate the wavefront of the light include the material, size, geometry and orientation of the nano structures.

[0651] The resonant wavelength of a metasurface can be engineered by changing the geometric sizes of its constituent nano structures, thereby providing wavelength selectivity. For example, metasurfaces may be engineered to be highly wavelength-selective in redirecting light. Thus, metasurfaces can be used as wavelength-selective incoupling optical elements and outcoupling optical elements. Similarly, metasurfaces may also be engineered to have reflectance spectra that exhibit sharp reflectance peaks in the visible wavelength region.

[0652] In conventional optical elements such as lenses and waveplates, the wavefront is controlled via propagation phases in a medium much thicker than the wavelength. Unlike conventional optical elements, metasurfaces instead induce phase changes in light using subwavelength-sized resonators as phase shift elements. Because metasurfaces are formed of features that are relatively thin and uniform in thickness, they can be patterned across a surface using thin film processing techniques such as semiconductor processing techniques, as well as direct-printing techniques such as nanoimprint techniques.

[0653] FIG. **75** illustrates an example of a metasurface according to some embodiments, as described in more detail in U.S. Patent Application No. 2017/0131460, the content of which is incorporated herein in its entirety for all purposes. A substrate **7500** has a surface **7500***a* on which a metasurface **7510** is deposed. The metasurface **7510** includes a plurality of levels of optically transmissive materials. As illustrated, in some embodiments, the metasurface is a bi-level structure having first level **7512** and a second level **7514**. The first level **7512** includes a plurality of protrusions **7520** formed of a first optically transissive material and masses **7530***a* of a second optically transmissive material between the protrusions. The second level **7514** is on the protrusions (spaced away and separated from the substrate by the first level) and includes second level masses **7530***b* of the second optically transmissive material formed on the protrusions **7520**. The protrusions **7520** may be ridges (or nanowires), which are laterally elongated into and out of the page and define trenches between neighboring protrusions. As illustrated, on the second level **7514**, the masses **7530***b* of the second optically transmissive material may be localized on the surface of the protrusions **7520**, forming plateaus of material spaced apart from other localized deposits (or plateaus) of the second optically transmissive material.

[0654] Preferably, the refractive index of the second optically transmissive material forming the masses **7530***a*, **7530***b* is higher than the refractive index of both the first optically transissive material forming the protrusions **7520** and of the material forming the substrate **7500**. In some embodiments, the refractive index of the first optically transissive material is lower than or similar to the refractive index of the material forming the substrate **7500**. It will be appreciated that the substrate **7500** may be a waveguide, and may correspond to the waveguides **7020**, **7030**, **7040** (FIG. **70**), **7220**, **7230**, **7240**, (FIG. **72**), and/or waveguides **7320**, **7330**, and **7340**, (FIG. **73**). In such applications, the substrate preferably has a relative high refractive index, e.g., higher than 1.5, 1.6, 1.7, 1.8, or 1.9, which can provide benefits for increasing the field of view of a display outputting light from that substrate **7500** to form an image. In some embodiments, the substrate **7500** is formed of glass (e.g., doped glass), lithium niobate, plastic, a polymer, sapphire, or other optically transmissive material. Preferably, the glass, plastic, polymer, sapphire, or other optically transmissive material has a high refractive index, e.g., a refractive index higher than 1.5, 1.6, 1.7, 1.8, or 1.9.

[0655] With continued reference to FIG. **75**, the first optically transissive material of the protrusions **7520** is preferably a material that may be patterned, e.g., by lithography and etch processes. More preferably, the first optically transmissive material is a nanoimprint resist that may be patterned by nanoimprinting. As discussed herein, the second optically transmissive material forming the masses **7530***a*, **7530***b* has a higher refractive index than both the first optically transissive material of the protrusions **7520** and the material forming the substrate **7500**. In some embodiments, the refractive index of the second optically transmissive material is higher than 1.6, 1.7, 1.8, or 1.9. Examples of materials for the second optically transmissive material include semiconductor materials, including silicon-containing materials and oxides. Examples of silicon-containing materials include silicon nitride and silicon carbide. Examples of oxides include titanium oxide, zirconium oxide, and zinc oxide. In some embodiments, the second optically transmissive material may have lower optical transparency. For example, the second optically transmissive material may be silicon or its derivatives. In some embodiments, the first and second optically transmissive materials **7520**, **7530** are amorphous solid state materials, or crystalline solid state materials. Amorphous materials may be desirable in some applications, since they may be formed at lower temperatures and over a wider range of surfaces than some crystalline materials. In some embodiments, each of the first and second optically transmissive materials forming the features **7520**, **7530***a*, **7530***b* may be one of an amorphous or crystalline semiconductor material.

[0656] With continued reference to FIG. **75**, the protrusions have a pitch **7540**. As used herein, pitch refers to the distance between similar points on two immediately neighboring structures. It will be appreciated that the similar points are similar in that they are at similar parts (e.g., a left or right edge) of structures that are substantially identical. For example, the pitch of the protrusions **7520** is equal to the total width defined by a protrusion **7520** and the immediately neighboring separation between that protrusion and an immediately neighboring similar protrusion **7520**. Stated another way, the pitch may be understood to be the period corresponding to the width of repeating units (e.g., the sum of the width of a protrusion **7520** and a mass **7530***a*) of the array of features formed by those protrusions **7520**.

[0657] As illustrated, light of different wavelengths (corresponding to different colors) may impinge on the metasurface and, as discussed herein, the metasurface is highly selective in redirecting light of specific wavelengths. This selectivity may be achieved based upon the pitch and physical parameters of the features of the first and second levels **7512**, **7514**, as discussed herein. The pitch of the protrusions **7520** is less than the wavelength of light desired for light redirection of zero order reflection, in some embodiments. In some embodiments, the geometric size and periodicity increases as wavelengths become longer, and the height or thickness of one or both of the protrusions **7520** and masses **7530***a*, **7530***b* also increase as wavelengths become longer. The illustrated light rays **7550***a*, **7550***b*, and **7550***c* correspond to light of different wavelengths and colors in some embodiments. In the illustrated embodiment, the metasurface has a pitch that causes light ray **7550***b* to be

reflected, while the light rays **7550***a* and **7550***c* propagate through the substrate **7500** and the metasurface **7510**.

[0658] Advantageously, the multi-level metasurface is highly selective for particular wavelengths of light. FIG. **76** shows plots of transmission and reflection spectra for a metasurface having the general structure shown in FIG. **75** according to some embodiments. In this example, the protrusions **7520** have a width of 125 nm, a thickness of 25 nm, and are formed of resist; the masses of material **7530***a* and **7530***b* have a thickness of 75 nm and are formed of silicon nitride; the pitch is 340 nm; and air gaps separate the masses **7530***b*. The horizontal axis indicates wavelength and the vertical axis indicates transmission (on a scale of 0-1.00, from no reflection to complete reflection) for normal incidence (i.e., at zero degree angle of incidence). Notably, a sharp peak in reflection R_0 (at 517 nm), and a concomitant reduction in transmission T_0, is seen for a narrow band of wavelengths while other wavelengths are transmitted. Light is reflected when the wavelength is matched with the resonant wavelength (about 517 nm in this example). The protrusions **7520** and overlying structures **7530** are arranged with subwavelength spacing, and there is only zero order reflection and transmission. As shown in FIG. **76**, the reflection spectrum shows a sharp peak across the visible wavelength region, which is a signature of optical resonance.

[0659] Metasurfaces may be formed in one-dimensional (1D) nano structures or two-dimensional (2D) nano structures. FIGS. **77**A and **77**B show a top view and a side view, respectively, of a metasurface **7710** that is formed by one-dimensional nanobeams **7714** according to some embodiments. As illustrated, a plurality of nanobeams **7714** are formed on a surface of a substrate **7712** (e.g., a waveguide). Each nanobeam **7714** extends laterally along the Y-axis and protrudes from the surface of the substrate **7712** along the negative Z-direction. The plurality of nanobeams **7714** are arranged as a periodic array along the X-axis. In some embodiments, the nanobeams **7714** may comprise silicon (e.g., amorphous silicon), TiO_2, Si_3N_4, or the like. The metasurface **7710** may be referred to as a single layer metasurface as it includes a single-layer of nano structure formed on the substrate **7712**.

[0660] FIGS. **77**C and **77**D show a plan view and a side view, respectively, of a metasurface **7720** that is formed by one-dimensional nanobeams **7724** according to some other embodiments. A plurality of nanobeams **7724** are formed on a surface of a substrate **7722** (e.g., a waveguide). Each nanobeam **7724** extends laterally along the Y-axis and protrudes from the surface of the substrate **7722** along the negative Z-direction. The plurality of nanobeams **7724** are arranged as a periodic array along the X-axis. In some embodiments, the nanobeams **7724** may comprise silicon (e.g., amorphous silicon), TiO_2, Si_3N_4, or the like.

[0661] The metasurface **7720** may further include a first dielectric layer **7725** that fills the region between the nanobeams **7724** and covers the nanobeams **7724**, a second dielectric layer **7726** disposed over the first dielectric layer **7725**, a third dielectric layer **7727** disposed over the second dielectric layer **7726**, and a fourth dielectric layer **7728** disposed over the third dielectric layer **7727**. In some embodiments, the nanobeams **7724** may comprise silicon (e.g., amorphous silicon); the first dielectric layer **7725** and the third dielectric layer **7727** may comprise a photoresist, or the like; the second dielectric layer **7726** and the fourth dielectric layer **7728** may comprise TiO_2, and the like. In some embodiments, the first dielectric layer **7725** and the third dielectric layer **7727** may comprise a material having a refractive index in a range between 1.4 and 1.5. The second dielectric layer **7726** and the fourth dielectric layer **7728** may serve to increase the reflectivity of the metasurface **7720**. In some embodiments, each of the second dielectric layer **7726** and the fourth dielectric layer **7728** may have a thickness of about 160 nm; the first dielectric layer **7725** may have a thickness of about 60 nm. The metasurface **7720** may be referred to as a multilayer metasurface, as it includes multiple layers formed on the substrate **7722**.

[0662] FIGS. **78**A and **78**B show a top view and a side view, respectively, of a single-layer two-dimensional metasurface **7810** that is formed by a plurality of nano antennas **7814** formed on a surface of a substrate **7812** (e.g., a waveguide) according to some embodiments. The plurality of nano antennas **7814** are arranged as a two-dimensional array in the X-Y plane. In some embodiments, each nano antenna **7814** may have a rectangular shape as illustrated in FIG. **78**A. The nano antennas **7814** may have other shapes, such as circular, elliptical, and the like, according to various other embodiments.

[0663] FIGS. **78**C and **78**D show a plan view and a side view, respectively, of a multilayer two-dimensional metasurface **7820** according to some embodiments. A plurality of nano antennas **7824** are arranged as a two-dimensional array in the X-Y plane on a surface of a substrate **7822** (e.g., a waveguide). The metasurface **7820** may further include a first dielectric layer **7825** that fills the region between the nano antennas **7824** and covers the nano antennas **7824**, a second dielectric layer **7826** disposed over the first dielectric layer **7825**, a third dielectric layer **7827** disposed over the second dielectric layer **7826**, and a fourth dielectric layer **7828** disposed over the third dielectric layer **7827**. In some embodiments, the nano antennas **7824** may comprise silicon (e.g., amorphous silicon); the first dielectric layer **7825** and the third dielectric layer **7827** may comprise a photoresist, or the like; the second dielectric layer **7826** and the fourth dielectric layer **7828** may comprise TiO_2, and the like. The second dielectric layer **7826** and the fourth dielectric layer **7828** may serve to increase the reflectivity of the metasurface **7820**.

[0664] The single-layer one-dimensional metasurface **7710** illustrated in FIGS. **77**A and **77**B may exhibit a sharp reflectance peak at certain wavelength for a given angle of incidence, similar to that illustrated in FIG. **76**. However, the peak wavelength may shift as the angle of incidence is varied. This angle dependence may limit the effective angular field of view. Adding additional layers of dielectric materials on top of the nanostructures can give another degree of freedom to tune the reflection spectrum. For example, the multilayer one-dimensional metasurface **7720** illustrated in FIGS. **77**C and **77**D may be configured to have a reflectance spectrum that is substantially angle-insensitive for a range of angles of incidence, as discussed further below. The multilayer two-dimensional metasurface **7820** illustrated in FIGS. **78**C and **78**D can also provide additional degrees of freedom to tune the reflection spectrum.

[0665] FIG. **79** shows plots of simulated reflectance as a function of angle of incidence for a wavelength corresponding to green color (e.g., at about 520 nm) (solid line), and for a wavelength corresponding to red color (e.g., at about 650 nm) (dashed line) of the multilayer one-dimensional meta-

surface **7720** illustrated in FIGS. **77**C and **77**D, for TE polarization, according to some embodiments. As illustrated, the reflectance for the green wavelength remains fairly flat (e.g., at approximately 70%) for the angular range from about −30 degrees to about 30 degrees. In the same angular range, the reflectance for the red wavelength remains fairly low (e.g., below about 10%).

[0666] FIG. **80** shows plots of a simulated reflectance spectrum (solid line) and a simulated transmission spectrum (dashed line) of the multilayer one-dimensional metasurface **7720** illustrated in FIGS. **77**C and **77**D, for TE polarization, according to some embodiments. As illustrated, the reflectance spectrum shows a broad peak from about 480 nm to about 570 nm. Correspondingly, the transmission spectrum shows a broad valley in the same wavelength range. Thus, angle insensitivity may be achieved at the expense of a wider band width in the reflectance spectrum. For an augmented reality system, a wider reflectance band width means that more natural light from the world may be reflected by the wavelength-selective reflector and thus may not reach a viewer's eye.

[0667] FIG. **81** shows plots of simulated reflectance as a function of angle of incidence for a wavelength corresponding to green color (e.g., at about 520 nm) (solid line), and for a wavelength corresponding to red color (e.g., at about 650 nm) (dashed line) of the multilayer one-dimensional metasurface **7720** illustrated in FIGS. **77**C and **77**D, for TM polarization, according to some embodiments. As illustrated, the reflectance for the green wavelength remains fairly flat (e.g., at approximately 75%) for the angular range from about −30 degrees to about 30 degrees. In the same angular range, the reflectance for the red wavelength remains fairly low (e.g., below about 5%). Compared to FIG. **79**, the peak reflectance value for the green wavelength is slightly higher for TM polarization (e.g., at about 75%) than its counterpart for TE polarization (e.g., at about 70%).

[0668] FIG. **82** shows plots of a simulated reflectance spectrum (solid line) and a simulated transmission spectrum (dashed line) of the multilayer one-dimensional metasurface **7720** illustrated in FIGS. **77**C and **77**D, for TM polarization, according to some embodiments. As illustrated, the reflectance spectrum shows a broad peak from about 480 nm to about 570 nm. Correspondingly, the transmission spectrum shows a broad valley in the same wavelength range. Compared to the FIG. **80**, the reflectance spectrum for TM polarization exhibits a more rounded peak than its counterpart for TE polarization. Also, the transmission spectrum for TM polarization exhibits higher values outside the reflectance band as compared to its counterpart for TE polarization. In general, the resonant wavelength (e.g., the wavelength at which a reflection peak occurs) may shift to longer wavelength for increasing geometry sizes of the nanostructures. The bandwidth of the reflectance spectrum and the angular width of the angular spectrum may increase for decreasing aspect ratio of the nanostructures.

[0669] In some embodiments, multiple metasurfaces may be interleaved to form a composite metasurface to achieve desired spectral properties. FIGS. **83**A-**83**F illustrate schematically how a composite metasurface may be formed by interleaving two sub-metasurfaces according to some embodiments.

[0670] FIG. **83**A shows a top view of a first sub-metasurface **8310** that includes a plurality of first nano antennas **8314** formed on a substrate **8302**. Each first nano antenna **8314** has a rectangular shape with a first aspect ratio. FIG. **83**B illustrates schematically a reflectance spectrum of the first sub-metasurface **8310** as a function of angle of incidence. As illustrated, the geometry of the first nano antennas **8314** may be designed such that the reflectance spectrum exhibits a peak at a first angle of incidence.

[0671] FIG. **83**C shows a top view of a second sub-metasurface **8320** that includes a plurality of second nano antennas **8324** formed on a substrate **8304**. Each second nano antenna **8324** has a rectangular shape with a second aspect ratio that is greater than the first aspect ratio (e.g., it is more elongated). FIG. **83**D illustrates schematically a reflectance spectrum of the second sub-metasurface **8320** as a function of angle of incidence. As illustrated, the geometry of the second nano antennas **8324** may be designed such that the reflectance spectrum exhibits a peak at a second angle of incidence different from the first angle of incidence.

[0672] FIG. **83**E shows a top view of a composite metasurface **8330** that includes a plurality of first nano antennas **8314**, a plurality of second nano antennas **8324**, as well as a plurality of third nano antennas **8334**, a plurality of fourth nano antennas **8344**, and a plurality of fifth nano antennas **8354**, formed on a substrate **8306**. The composite metasurface **8330** may be viewed as a composite of the first sub-metasurface **8310**, the second sub-metasurface **8320**, and so on and so forth. The nano antennas of each sub-metasurface may be randomly interleaved with each other. FIG. **83**F illustrates schematically a reflectance spectrum of the composite metasurface **8330** as a function of angle of incidence. As illustrated, the composite metasurface **8330** may be characterized by a plurality of reflectance peaks **8316**, **8326**, **8336**, **8346**, and **8356** at a plurality of angles of incidence, each reflectance peak corresponding to a respective constituent sub-metasurface. The composite metasurface **8330** may include more than or fewer than five sub-metasurfaces according to various embodiments. In some embodiments, the reflectance spectrum as a function of wavelength for each sub-metasurface may exhibit a reflectance peak with a relatively narrow bandwidth, and the plurality of sub-metasurfaces may be configured to exhibit a reflectance peak at about the same wavelength range.

[0673] Multiple metasurfaces may be multiplexed to form a composite metasurface with desired spectral properties. FIGS. **84**A and **84**B show a top view and a side view, respectively, of a metasurface **8400** according to some embodiments. The metasurface **8400** may include a first array of first nano antennas **8410** arranged in a first lateral region on a surface of a substrate **8402**, a second array of second nano antennas **8420** arranged in a second lateral region next to first lateral region, a third array of third nano antennas **8430** arranged in a third lateral region next to the second lateral region, a fourth array of fourth nano antennas **8440** arranged in a fourth lateral region next to the third lateral region, a fifth array of fifth nano antennas **8450** arranged in a fifth lateral region next to the fourth lateral region, and a sixth array of sixth nano antennas **8460** arranged in a sixth lateral region next to the fifth lateral region.

[0674] Each first nano antenna **8410** may have a rectangular shape with a first aspect ratio designed such that the first array of first nano antennas **8410** is characterized by a first reflectance spectrum **8412** having a peak at a first angle of incidence **8412**, each second nano antenna **8420** may have a rectangular shape with a second aspect ratio designed such

that the second array of first nano antennas **8420** is characterized by a second reflectance spectrum **8422** having a peak at a second angle of incidence **8422**, and so on and so forth, as illustrated in FIG. **84**C. In this manner, each array of nano antennas **8410**, **8420**, **8430**, **8440**, **8450**, or **8460** is optimized for light rays that may reach a viewer's eye **8401**, as illustrated in FIG. **84**B.

[0675] FIG. **85**A illustrates schematically a partial side view of an eyepiece **8500** according to some embodiments. The eyepiece includes a waveguide **8510**, a grating **8520** formed on a back surface of the waveguide **8510**, and a wavelength-selective reflector **8530** formed on a front surface of the waveguide **8510**. FIG. **85**B illustrates schematically a top view of the wavelength-selective reflector **8530** according to some embodiments. The wavelength-selective reflector **8530** may include a plurality of overlapping regions **8532**. Each region **8532** may comprise a metasurface optimized to have a reflectance peak at a respective angle of incidence corresponding to light rays that may reach a viewer's eye **8501**, both laterally (e.g., along the Y-axis) and vertically (e.g., along the X-axis, as illustrated in FIG. **85**A). For example, each region **8532** may include an array of nano antennas with a respective aspect ratio, similar to the first array of first antennas **8410**, the second array of second antennas **8420**, the third array of third antennas **8430**, the fourth array of fourth antennas **8440**, the fifth array of fifth antennas **8450**, or the sixth array of sixth antennas **8460**, as illustrated in FIG. **84**A. In some embodiments, the size of each region **8532** may be advantageously designed to match the diameter of the pupil of the viewer's eye **8501** plus a predetermined margin.

[0676] In some embodiments, a wavelength-selective reflector may comprise a volume phase hologram (may also be referred to as volume phase grating). Volume phase holograms are periodic phase structures formed in a layer of transmissive medium, usually dichromatic gelatin or holographic photopolymer, which is generally sealed between two layers of clear glass or fused silica in the case of dichromatic gelatin. The phase of incident light is modulated as it passes through the optically thick film that has a periodic refractive index, hence the term "volume phase." This is in contrast to a conventional grating, in which the depth of a surface relief pattern modulates the phase of the incident light. Volume phase holograms can be designed to work at different wavelengths by adjusting the period of the refractive index modulation and the index modulation depth (i.e. the difference between high and low index values) of the medium. The period of the reflective volume phase hologram is determined by the wavelength of the recording laser and the recording geometry. The modulation depth (which affects both the diffraction efficiency and the effective spectral bandwidth) may be determined by the material properties of the recording medium and the total exposure (typically expressed as mJ/cm^2). The spectral and angular selectivity of the volume phase hologram may be determined by the thickness of the recording medium. The relationship between all of these parameters is expressed by Kogelnik's coupled wave equations, which are available from the literature (see, e.g., H. Kogelnik, Bell Syst. Tech. J. 48, 2909, 1969). The angular and wavelength properties of volume phase holograms are generally referred to as "Bragg selectivity" in the literature. Because of Bragg selectivity, volume phase holograms can be designed to have a high reflectance efficiency for a desired wavelength at a desired angle of incidence. More details about volume phase holograms that may be used in an eyepiece for an augmented reality system are provided in U.S. Provisional Patent Application No. 62/384,552, the content of which is incorporated herein in its entirety for all purposes.

[0677] FIG. **86**A illustrates schematically a partial cross-sectional view of a first volume phase hologram **8610** formed on a substrate **8602** (e.g., a waveguide) according to some embodiments. The first volume phase hologram **8610** may have a first modulated index pattern **8612** designed to produce a high reflectance peak at a first angle of incidence, as illustrated schematically in FIG. **86**B. For example, the first modulated index pattern **8612** may comprise periodic index stripes titled at a first tilting angle with respect to the Z-axis in order to reflect light within a specific wavelength range and over a predetermined range of angles back towards the viewer. In this case, the angular range of the reflected light is related to the tilt of the index modulation planes. Volume phase holograms can be made very selective by choosing an appropriate material thickness. In some embodiments, the medium thickness may be in a range from about 8 microns to about 50 micros to achieve the desired angular and spectral selectivity.

[0678] FIG. **86**C illustrates schematically a partial cross-sectional view of a second volume phase hologram **8620** according to some embodiments. The second volume phase hologram **8620** may have a second modulated index pattern **8622** designed to produce a high reflectance peak at a second angle of incidence different from the first angle of incidence, as illustrated schematically in FIG. **86**D. For example, the second modulated index pattern **8622** may comprise periodic index stripes titled at a second tilting angle with respect to the Z-axis that is greater than the first tilting angle as illustrated in FIGS. **86**A and **86**C.

[0679] FIG. **86**E illustrates schematically a partial cross-sectional view of a composite volume phase hologram **8630** according to some embodiments. FIG. **86**F illustrates schematically a side view of a composite volume phase hologram **8630** formed on a surface of a waveguide **8602** according to some embodiments. (Note FIG. **86**E and FIG. **86**F have different scales along the Z-axis). The composite volume phase hologram **8630** may include a plurality of regions **8631-8637**. Each region **8631-8637** may be optimized for a respective angle of incidence corresponding to light rays that may reach a viewer's eye **8601**, as illustrated in FIG. **86**F. For example, each region **8631-8637** may comprise periodic index stripes tilted at a respective tilting angle with respect to the Z-axis, where the tilting angles of the plurality of regions **8631-8637** are different from each other as illustrated in FIG. **86**E.

[0680] In some embodiments, it may be also possible to multiplex multiple index modulation profiles within the same volume phase hologram. Each separate modulation profile can be designed to reflect light within a narrow wavelength range during hologram recording by choosing an appropriate exposure wavelength. Preferably the corresponding exposures are performed simultaneously (using separate lasers). It may also be possible to sequentially record the gratings. Such a multiplexed volume phase hologram may be used for the wavelength-selective reflector **7356** illustrated in FIG. **73**.

[0681] Similar to the metasurface illustrated in FIGS. **85**A and **85**B, a composite volume phase hologram may comprise overlapping regions arranged as a two-dimensional

array in some embodiments. Each region may be optimized to have a reflectance spectrum exhibiting a peak at a respective angle of incidence corresponding to light rays that may reach a viewer's eye, both laterally (e.g., along the Y-axis) and vertically (e.g., along the X-axis).

[0682] FIG. **87** is a schematic diagram illustrating a projector **8700**, according to one embodiment. The projector **8700** includes a set of spatially displaced light sources **8705** (e.g., LEDs, lasers, etc.) that are positioned in specific orientations with a predetermined distribution as discussed below in relation to FIGS. **90**A-**90**C. The light sources **8705** can be used by themselves or with sub-pupil forming collection optics, such as, for example, light pipes or mirrors, to collect more of the light and to form sub-pupils at the end of the light pipes or collection mirrors. For purposes of clarity, only three light sources are illustrated. In some embodiments, quasi-collimation optics **8725** are utilized to quasi-collimate the light emitted from the light sources **8705** such that light enters a polarizing beam splitter (PBS) **8710** in a more collimated like manner so that more of the light makes it to the display panel **8707**. In other embodiments, a collimating element (not shown) is utilized to collimate the light emitted from the light sources after propagating through portions of the PBS **8710**. In some embodiments, a pre-polarizer may be between the quasi-collimating optics **8725** and the PBS **8710** to polarize the light going into the PBS **8710**. The pre-polarizer may also be used for recycling some the light. Light entering the PBS **8710** reflects to be incident on the display panel **8707**, where a scene is formed. In some embodiments, time sequential color display can be used to form color images.

[0683] Light reflected from the display panel **8707** passes through the PBS **8710** and is imaged using the projector lens **8715**, also referred to as imaging optics or a set of imaging optics, to form an image of the scene in a far field. The projector lens **8715** forms roughly a Fourier transform of the display panel **8707** onto or into an eyepiece **8720**. The projector **8700** provides sub-pupils in the eyepiece that are inverted images of the sub-pupils formed by the light sources **8705** and the collection optics. As illustrated in FIG. **87**, the eyepiece **8720** includes multiple layers. For example, the eyepiece **8720** includes six layers or waveguides, each associated with a color (e.g., three colors) and a depth plane (e.g., two depth planes for each color). The "switching" of colors and depth layers is performed by switching which of the light sources is turned on. As a result, no shutters or switches are utilized in the illustrated system to switch between colors and depth planes.

[0684] Additional discussion related to the projector **8700** and variations on architectures of the projector **8700** are discussed herein.

[0685] FIG. **88** is a schematic diagram illustrating a projector **8800**, according to another embodiment. In the embodiment illustrated in FIG. **88**, a display panel **8820** is an LCOS panel, but the disclosure is not limited to this implementation. In other embodiments, other display panels, including frontlit LCOS (FLCOS), DLP, and the like can be utilized. In some embodiments, a color sequential LCOS design is utilized as discussed in relation to the time sequential encoding discussed in relation to FIG. **91**, although other designs can be implemented in which all colors (e.g., RGB) are displayed concurrently. As color filters improve in performance and pixel sizes are decreased, system performance will improve and embodiments of the present disclosure will benefit from such improvements. Thus, a number of reflective or transmissive display panels can be utilized in conjunction with the distributed sub-pupil architecture disclosed herein. One of ordinary skill in the art would recognize many variations, modifications, and alternatives.

[0686] Light emitted by light sources **8810**, in some embodiments including collection optics, and polarized by a pre-polarizer **8825** propagates through a polarizing beam splitter (PBS) **8830**, passes through a quarter waveplate **8827**, and impinges on a collimator **8832**, which can be implemented as, for example, a mirrored lens, a reflective lens, or curved reflector. The spatial separation between the light sources **8810** enables a distributed sub-pupil architecture. The collimator **8832**, which is a reflective collimator in some embodiments, quasi-collimates or collects the beam emitted by the light sources **8810** and directs the collimated beams back through the quarter waveplate **8827** again into the PBS **8830** with a polarization state changed to direct the light onto the display panel **8820**.

[0687] As the collimated beams propagate through the PBS **8830**, they are reflected at an interface **8831** and directed towards the display panel **8820**. The display panel **8820** forms a scene or a series of scenes that can be subsequently imaged onto an eyepiece. In some embodiments, time sequential image formation for different colors and depth planes is accomplished by sequentially operating the light sources **8810** in conjunction with operation of the display panel. In some embodiments, a compensation element is placed at the PBS **8830** or attached to the display panel **8820** to improve the performance of the display panel **8820**. After reflection from the display panel **8820**, the light propagates through the interface **8831** and exits the PBS **8830** at side **8804**. Optical lens **8840**, also referred to as projector lens **8840**, is then utilized to form a Fourier transform of the display and in conjunction with the collimator **8832** to form an inverted image of the sub-pupils of the light sources **8810** at or into the eyepiece. The interface **8831** can be implemented using polarizing films, wire grid polarizers, dielectric stacked coatings, combinations thereof, and the like.

[0688] According to some embodiments, a projector assembly is provided. The projector assembly includes a PBS (e.g., the PBS **8830**). The projector assembly also includes a set of spatially displaced light sources (e.g., the light sources **8810**) adjacent the PBS **8830**. The light sources **8810** can be different color LEDs, lasers, or the like. In some embodiments, the spatially displaced light sources **8810** are adjacent a first side **8801** of the PBS **8830**. The PBS **8830** passes the light emitted by the light sources **8810** during a first pass.

[0689] The collimator **8832**, which can be a reflective mirror, is disposed adjacent the PBS **8830** and receives the light making a first pass through the PBS **8830**. The collimator **8832** is adjacent a second side **8802** of the PBS **8830**, which is opposite the first side **8801** adjacent the spatially displaced light sources **8810**. The collimator **8832** collimates and collects the emitted light and directs the collimated light back into the second side **8802** of the PBS **8830**.

[0690] The projector assembly also includes the display panel **8820** adjacent a third side **8803** of the PBS **8830** positioned between the first side **8801** and the second side **8802**. The display panel can be an LCOS panel. During a second pass through the PBS **8830**, the collimated light reflects from the internal interface in the PBS **8830** and is

directed toward the display panel due to its change in polarization states caused by double passing the quarter waveplate **8827**.

[0691] The projector assembly further includes the projector lens **8840** adjacent a fourth side **8804** of the PBS **8830** that is positioned between the first side **8801** and the second side **8802** and opposite to the third side **8803**. The position of the projector lens **8840** between the PBS **8830** and the eventual image formed by the projection display assembly denotes that the illustrated system utilizes a PBS **8830** at the back of the projector assembly.

[0692] The projector assembly forms an image of the sub-pupils and a Fourier transform of the display panel **8820** at an image location. An incoupling interface to an eyepiece is positioned near the image location. Because light emitted by the spatially displaced light sources **8810** propagates through different paths in the projector assembly, the images associated with each light source of the light sources **8810** are spatially displaced at the image plane of the system, enabling coupling into different waveguides making up the eyepiece.

[0693] FIG. **89** is a schematic diagram illustrating multiple colors of light being coupled into corresponding waveguides using an incoupling element disposed in each waveguide, according to one embodiment. A first waveguide **8910**, a second waveguide **8920**, and a third waveguide **8930** are positioned adjacent each other in a parallel arrangement. In an example, the first waveguide **8910** can be designed to receive and propagate light in a first wavelength range **8901** (e.g., red wavelengths), the second waveguide **8920** can be designed to receive and propagate light in a second wavelength range **8902** (e.g., green wavelengths), and the third waveguide **8930** can be designed to receive and propagate light in a third wavelength range **8903** (e.g., blue wavelengths).

[0694] Light in all three wavelength ranges **8901**, **8902**, and **8903** are focused due to the Fourier transforming power of the projector lens **8940** onto roughly the same plane but displayed in the plane by roughly the spacing of the sub-pupils in the light module and the magnification, if any, of the optical system. The incoupling gratings **8912**, **8922**, and **8932** of the respective layers **8910**, **8920**, and **8930** are placed in the path that corresponds to the correct color sub-pupil so as to capture and cause a portion of the beams to couple into the respective waveguide layers.

[0695] The incoupling element, which can be an incoupling grating, can be an element of an incoupling diffractive optical element (DOE). When a given light source is turned on, the light from that light source is imaged at the corresponding plane (e.g., red LED #1, first waveguide **8910** at a first depth plane). This enables switching between colors by merely switching the light sources off and on.

[0696] In order to reduce the occurrence and/or impact of artifacts, also referred to as ghost images or other reflections, embodiments of the present disclosure utilize certain polarization filters and/or color filters. The filters may be used in single pupil systems.

[0697] FIGS. **90A-90C** are top views of distributed sub-pupil architectures, according to some embodiments. The distributed sub-pupils can be associated with different sub-pupils and are associated with different light sources (e.g., LEDs or lasers) operating at different wavelengths and in different positions. Referring to FIG. **90**A, this first embodiment or arrangement has six sub-pupils associated with two depth planes and three colors per depth plane. For example, two sub-pupils **9010** and **9012** associated with a first color (e.g., red sub-pupils), two sub-pupils **9020** and **9022** associated with a second color (e.g., green sub-pupils), and two sub-pupils **9030** and **9032** associated with a third color (e.g., blue sub-pupils). These sub-pupils correspond to six light sources that are spatially offset in an emission plane. The illustrated six sub-pupil embodiment may be suitable for use in a three-color, two-depth plane architecture. Additional description related to distributed sub-pupil architectures is provided in U.S. Patent Application Publication No. 2016/0327789, published on Nov. 10, 2016, the disclosure of which is hereby incorporated by reference in its entirety for all purposes.

[0698] As an example, if two light sources are positioned opposite each other with respect to an optical axis, it is possible that light from one of the light sources (i.e., a first light source) can propagate through the optical system, reflect off of the eyepiece, for example, an incoupling grating or other surface of the eyepiece, and propagate back through the optical system and then reflect again at the display panel to reappear at the location. This double reflection appearing in a location of another sub-pupil will create a ghost image since the light was originally emitted by the first light source. In the arrangement illustrated in FIG. **90**A, since sub-pupils **9010/9012**, **9020/9022**, and **9030/9032** are positioned opposite each other with respect to the center of the optical axis and the sub-pupil distribution, light from sub-pupil **9010** can be coupled to sub-pupil **9012**, from **9020** to **9022**, and from **9030** to **9032**. In this case, artifacts, also referred to as ghost images, can be formed in the optical system. It should be noted that in an alternative arrangement, the light sources can be positioned such that different colored sub-pupils are located opposite to each other with respect to the optical axis.

[0699] Referring to FIG. **90**B, a nine sub-pupil embodiment is illustrated, which would be suitable for use in a three-color, three-depth plane architecture. In this embodiment, a first set of sub-pupils including sub-pupils **9040**, **9042**, and **9044** associated with a first color (e.g., red sub-pupils) are positioned at 120° with respect to each other. A second set of sub-pupils including sub-pupils **9050**, **9052**, and **9054** associated with a second color (e.g., green) are positioned at 120° with respect to each other and the distribution is rotated 60° from the first color. Accordingly, if light from sub-pupil **9040** is reflected in the system and reappears at sub-pupil **9054** opposite to sub-pupil **9040**, no overlap in color will be present. A third set of sub-pupils including sub-pupils **9060**, **9062**, and **9064** associated with a third color (e.g., blue) are positioned inside the distribution of the first and second sub-pupils and positioned 120° with respect to each other.

[0700] FIG. **90**C illustrates a six sub-pupil arrangement in which sub-pupils **9070** and **9072** associated with a first color (e.g., red) are positioned at two corners of the sub-pupil distribution, sub-pupils **9080** and **9082** associated with a second color (e.g., green) are positioned at the other two corners of the sub-pupil distribution, and sub-pupils **9090** and **9092** associated with a third color (e.g., blue) are positioned along sides of the rectangular sub-pupil distribution. Thus, sub-pupil arrangement, as illustrated in FIGS. **90**B-**90**C, can be utilized to reduce the impact from ghost images. Alternative sub-pupil arrangements may also be utilized, such as, for example, sub-pupil arrangements in

which sub-pupils of different colors are opposite each other across the optical axis. Ghosting can be reduced by using color selective elements (e.g., a color selective rotator) or color filters at each respective incoupling grating.

[0701] FIG. **91** is a schematic diagram illustrating time sequential encoding of colors for multiple depth planes, according to one embodiment. As illustrated in FIG. **91**, the depth planes (three in this illustration) are encoded into least significant bit (LSB) per pixel via a shader. The projector assembly discussed herein provides for precise placement of pixels for each color in a desired depth plane. Three colors are sequentially encoded for each depth plane—(R0, G0, B0 for plane 0) **9102**, (R1, G1, B1 for plane 1) **9104**, and (R2, G2, B2 for plane 2) **9106**. Illumination of each color for 1.39 ms provides an illumination frame rate **9108** of 720 Hz and a frame rate for all three colors and three depth planes **9110** of 80 Hz (based on 12.5 ms to refresh all colors and planes). In some embodiments, a single color for a single depth plane per frame may be used by only using light sources associated with that particular color for that particular depth plane.

[0702] In some embodiments, multiple depth planes can be implemented through the use of a variable focus lens that receives the sequentially coded colors. One of ordinary skill in the art would recognize many variations, modifications, and alternatives.

[0703] FIG. **92**A is a schematic diagram illustrating a projector assembly, according to one embodiment. FIG. **92**B is an unfolded schematic diagram illustrating the projector assembly shown in FIG. **92**A. As illustrated in FIG. **92**A, a projector architecture **9200** includes an illumination source **9210**, which can emit a collimated set of light beams, such as, for example, lasers. In this embodiment, since light the system is already collimated, a collimator can be omitted from the optical design. The illumination source **9210** can emit polarized, unpolarized, or partially polarized light. In the illustrated embodiment, the illumination source **9210** emits light **9212** polarized with a p-polarization. A first optical element **9215** (e.g., a pre-polarizer) is aligned to pass light with p-polarization to a polarizing beam splitter (PBS) **9220**. Initially, light passes through an interface **9222** (e.g., a polarizing interface) of the PBS **9220** and impinges on a spatial light modulator (SLM) **9230**. The SLM **9230** impresses a spatial modulation on the signal to provide an image. In an on state, the SLM **9230** modulates input light from a first polarization state (e.g., p-polarization state) to a second polarization state (e.g., s-polarization state) such that a bright state (e.g., white pixel) is shown. The second polarization state may be the first polarization state modulated (e.g., shifted) by 90°. In the on state, the light having the second polarization state is reflected by the interface **9222** and goes downstream to projector lens **9240**. In an off state, the SLM **9230** does not rotate the input light from the first polarization state, thus a dark state (e.g., black pixel) is shown. In the off state, the light having the first polarization state is transmitted through the interface **9222** and goes upstream to the illumination source **9210**. In an intermediate state, the SLM **9230** modulates the input light from the first polarization to a certain elliptical polarization state. In the intermediate state, some of the light having the elliptical polarization state (e.g., p-polarization state) is reflected by the interface **9222** and goes upstream to the illumination source **9210** and some of the light having the elliptical polarization state (e.g., s-polarization state) is transmitted through the interface **9222** goes downstream to projector lens **9240**.

[0704] After reflection from the SLM **9230**, reflected light **9214** is reflected from the interface **9222** and exits the PBS **9220**. The emitted light passes through projector lens **9240** and is imaged onto an incoupling grating **9250** of an eyepiece (not shown).

[0705] FIG. **92**B illustrates imaging of light associated with a first sub-pupil **9211** of the illumination source **9210** onto the incoupling grating **9250** of the eyepiece. Light is collected before entry into the PBS **9220**, reflects from SLM **9230**, passes through projector lens **9240**, and is relayed onto the incoupling grating **9250**. The optical axis **9205** is illustrated in FIG. **92**B.

[0706] FIG. **93**A is a schematic diagram illustrating back reflections in a projector assembly. For purposes of clarity, reference numbers used in FIG. **92**A are also used in FIG. **93**A. Referring to FIG. **93**A, in a manner similar to the operation of the projector assembly **9200** in FIG. **92**A, s-polarization light from the spatial light modulator (SLM) **9230**, also referred to as a display panel, is reflected at interface **9222** inside the PBS **9220**. It should be noted that the tilting of the rays after reflection from interface **9222** are merely provided for purposes of clarity. Most of the light emitted from the PBS **9220** passes through projector lens **9240** and is relayed by projector lens **9240** to provide an image of the sub-pupils at the incoupling grating **9250** of the eyepiece.

[0707] A portion of the light emitted from the PBS **9220** is reflected at one or more surfaces **9242** of projector lens **9240** and propagates back toward the PBS **9220**. This reflected light **9302** reflects off of interface **9222**, SLM **9230**, interface **9222** a second time, passes through projector lens **9240**, and is relayed by projector lens **9240** to provide an image of the sub pupil at second incoupling grating **9252** of the eyepiece, which is laterally offset and positioned opposite to the incoupling grating **9250** with respect to the optical axis. Since the source of light at both incoupling gratings **9250** and **9252** is the same, the light at incoupling grating **9252** appears to be originating in the SLM **9230**, thereby producing an artifact or ghost image.

[0708] FIG. **93**B is an unfolded schematic diagram illustrating artifact formation in the projector assembly shown in FIG. **93**A. Light from first sub-pupil **9211** of the illumination source **9210** is collected by first optical element **9215**, propagates through the PBS **9220**, reflects off the SLM **9230**, makes another pass through the PBS **9220**, reflecting off interface **9222** (not shown), and passes through projector lens **9240**, which images the sub-pupil of the light source at the IG **9250** (not shown).

[0709] Light reflected from one or more surfaces of projector lens **9240** passes through the PBS **9220**, and reflects off of the SLM **9230**. After reflection in the PBS **9220**, the light propagates in the downstream path through projector lens **9240** and is relayed by projector lens **9240** to provide a defocused image of the sub-pupil at a second incoupling grating **9252** of the eyepiece, which is laterally offset and positioned opposite to the first incoupling grating **9250** with respect to the optical axis. Since, in this case, the light source at both incoupling gratings **9250** and **9252** is the same, the light at incoupling grating **9252** appears to be originating in the SLM **9230**, thereby producing an artifact or ghost image.

[0710] FIG. **94** illustrates presence of an artifact in a scene for the projector assembly illustrated in FIG. **93**A. As seen in FIG. **94**, the text "9:45 AM" is intended for display by the projector. In addition to the intended text **9410**, an artifact **9420** is displayed. The artifact **9420** also has the text "9:45 AM" but with reduced intensity and flipped with respect to the intended text **9410**.

[0711] FIG. **95**A is a schematic diagram illustrating a projector assembly with artifact prevention **9500**, also referred to as ghost image prevention, according to one embodiment. The projector assembly illustrated in FIG. **95**A shares some common elements with the projector assembly illustrated in FIG. **92**A and the description provided in FIG. **92**A is applicable to the projector assembly in FIG. **95**A as appropriate. As described herein, the projector assembly with artifact prevention **9500** includes a circular polarizer **9510** that enables attenuation or blocking of light propagating in the upstream path in specific polarizations that can be reflected from projector lens **9240**.

[0712] Light from a projector assembly creates an image at the image plane, for example, the incoupling grating **9250** of the eyepiece, where the eyepiece is positioned. Some of the light from the projector assembly can be reflected from the elements **9242** of projector lens **9240** and return upstream towards the projector assembly. If the reflected light **9502** is not blocked, it could travel to and reflect off the SLM **9230** and go downstream towards, for example, the incoupling grating **9252**, resulting in artifacts or ghost images that are produced in the eyepiece. To prevent or reduce the intensity of these ghost images, embodiments of the present disclosure block most or all of the reflected light and prevent most or all of the reflected light from impinging on the SLM **9230**.

[0713] The projector assembly **9500** with artifact prevention includes a circular polarizer **9510** incorporating a linear polarizer **9512** and a quarter waveplate **9514**. The circular polarizer **9510** is positioned between the PBS **9220** and projector lens **9240**. As illustrated in the inset in FIG. **95**A, the circular polarizer **9510** receives s-polarized light from the PBS **9220** and generates circularly polarized light (e.g., left hand circularly polarized (LHCP) light) in the downstream path. One advantage of the circular polarizer **9510** is that it acts as a cleanup polarizer for the projector assembly **9500** which improves contrast.

[0714] As illustrated in FIG. **95**A, the downstream light is LHCP polarized and reflection from the one or more surfaces **9242** of projector lens **9240** will introduce a phase shift such that the reflected light is circularly polarized with an opposing handedness (e.g., right hand circularly polarized (RHCP)). Referring to the inset, the RHCP light is converted to linearly polarized light by the quarter waveplate **9514**. The linearly polarized light is polarized in a direction orthogonal to the transmission axis of the linear polarizer **9512** as it passes through the quarter waveplate **9514** and is, therefore, blocked by the linear polarizer **9512**. Thus, the light reflected from projector lens **9240** is blocked and prevented from impinging on the SLM **9230**. Therefore, embodiments of the present disclosure prevent or reduce the intensity of these unwanted artifacts or ghost images through the use of the circular polarizer **9510**. In some embodiments, a portion **9504** of the reflected light can be reflected from the quarter waveplate **9514**. This portion **9504** of the light reflected from the quarter waveplate **9514** will propagate away from the quarter waveplate toward the set of imaging optics **9240**.

[0715] FIG. **95**B is a flowchart illustrating a method **9550** of reducing optical artifacts according to one embodiment. The method **9550** includes injecting a light beam generated by an illumination source into a polarizing beam splitter (PBS) (**9552**) and reflecting a spatially defined portion of the light beam from a display panel (**9554**). The light beam can be one of a set of light beams. As an example, the set of light beams can include a set of spatially displaced light sources, for example, LEDs.

[0716] The method **9550** also includes reflecting, at an interface in the PBS, the spatially defined portion of the light beam towards projector lens (**9556**) and passing at least a portion of the spatially defined portion of the light beam through a circular polarizer disposed between the PBS and projector lens (**9558**). The spatially defined portion of the light beam can be characterized by a linear polarization. The method **9550** further includes reflecting, by one or more elements of the projector lens, a return portion of the spatially defined portion of the light beam (**9560**) and attenuating, at the circular polarizer, the return portion of the spatially defined portion of the light beam (**9562**). The return portion of the spatially defined portion of the light beam can be characterized by a circular polarization.

[0717] It should be appreciated that the specific steps illustrated in FIG. **95**B provide a particular method of reducing optical artifacts according to one embodiment. Other sequences of steps may also be performed according to alternative embodiments. For example, alternative embodiments of the present disclosure may perform the steps outlined above in a different order. Moreover, the individual steps illustrated in FIG. **95**B may include multiple sub-steps that may be performed in various sequences as appropriate to the individual step. Furthermore, additional steps may be added or removed depending on the particular applications. One of ordinary skill in the art would recognize many variations, modifications, and alternatives.

[0718] FIG. **96** illustrates reduction in intensity of the artifact using the projector assembly shown in FIG. **95**A. The artifact **9420** illustrated in FIG. **94** is reduced in intensity, for example, eliminated, demonstrating the effectiveness of the reflection reduction system.

[0719] FIG. **97**A is a schematic diagram illustrating artifact formation resulting from reflections from an in-coupling grating element or substrate surfaces of an eyepiece in a projection display system, according to one embodiment. FIG. **97**B is an unfolded schematic diagram illustrating artifact formation resulting from reflections from an in-coupling grating or substrate surfaces of an eyepiece in the projection display system shown in FIG. **97**A. The projector assembly illustrated in FIGS. **97**A and **97**B shares some common elements with the projector assembly illustrated in FIGS. **93**A and **93**B and the description provided in FIGS. **93**A and **93**B is applicable to the projector assembly in FIGS. **97**A and **97**B as appropriate. In some embodiments, the projector assembly illustrated in FIG. **97**A may include a circular polarizer (e.g., the circular polarizer **9510** of FIG. **95**A) between the PBS **9220** and projector lens **9240**.

[0720] For purposes of clarity, reference numbers used in FIG. **93**A are also used in FIG. **97**A. Referring to FIG. **97**A, in a manner similar to the operation of the projector assembly **9200** in FIG. **92**A, s-polarization light **9702** from the

SLM **9230**, also referred to as a display panel, is reflected at interface **9222** inside the PBS **9220**. It should be noted that the tilting of the rays after reflection from interface **9222** are merely provided for purposes of clarity. Most of the light emitted from the PBS **9220** passes projector lens **9240** and is relayed by projector lens **9240** to provide an image of the sub-pupil at the incoupling grating **9250** of the eyepiece.

[0721] A portion of the light incident on the incoupling grating **9250** is reflected by the incoupling grating **9250**. As illustrated in FIG. **97**A, although the light incident on the incoupling grating **9250** can be in a single polarization (e.g., s-polarization), the light reflected from the incoupling grating **9250** can have a mixture of polarizations (A*s+B*p) **9704**, where A and B are coefficients between zero and one. For diffractive optical incoupling gratings with steps that are in a plane of the eyepiece, the reflections are of mostly flipped circular polarizations. However, if the incoupling gratings are slanted out of the plane of the eyepiece, then other polarization states will be reflected. The reflected light **9704** passes through projector lens **9240** and emerges with a mixture of polarizations (C*s+D*p) **9706** as it propagates back toward the PBS **9220**, where C and D are coefficients between zero and one. Generally, A>C and B>D as a result of the characteristics of the incoupling grating **9250**.

[0722] Light in the upstream path that is properly aligned with the polarization of interface (C*s) **9708** reflects from interface **9222**, SLM **9230**, interface **9222**, passes through projector lens **9240**, and is imaged by projector lens **9240** to provide an image at second incoupling grating **9252** of the eyepiece (E*s) **9712**. Since the source of light at both incoupling gratings **9250** and **9252** is the same, the light at incoupling grating **9252** appears to be originating in the SLM **9230**, thereby producing an artifact or ghost image.

[0723] Referring to FIG. **97**B, the symmetry around the optical axis **9205** is demonstrated by the imaging at incoupling grating **9250** after the first pass through the PBS **9220** and projector lens **9240** and the imaging at incoupling grating **9252** after the reflected light **9704** is reflected from SLM **9230** a second time.

[0724] FIG. **98** is a schematic diagram illustrating reflections from an in-coupling grating element, according to one embodiment. The eyepiece can include a cover glass **9810** and an incoupling grating **9820**. Incoming light is illustrated as LHCP input light **9801**. Although input light with circular polarization is illustrated, embodiments of the present disclosure are not limited to circularly polarized light and the input light can be elliptically polarized with predetermined major and minor axes. The reflections from the eyepiece can include a reflection **9803** from a front surface **9812** of the cover glass **9810** as well as a reflection **9805** from a back surface **9814** of the cover glass **9810**. Additionally, reflection **9807** from the incoupling grating **9820** is illustrated. In this example, reflections **9803** and **9805** are RHCP and reflection **9807** is LHCP. The sum of these reflections results in a mixed polarization state propagating upstream toward the PBS **9220**. Accordingly, in FIG. **97**A, the reflection from incoupling grating **9250** is illustrated as A*s+B*p, but it will be evident to one of ordinary skill in the art that the polarization state of the reflected light is not limited to combinations of linear polarization, but can include elliptical polarizations as well. In particular, when diffractive elements of the incoupling grating **9250** include blazed grating features, the polarization state of the reflected light is characterized by complex elliptical polarizations. One of ordinary skill in the art would recognize many variations, modifications, and alternatives.

[0725] FIG. **99**A is a schematic diagram illustrating a projector assembly with artifact prevention, also referred to as ghost image prevention, according to one embodiment. The projector assembly illustrated in FIG. **99**A shares some common elements with the projector assembly illustrated in FIG. **92**A and the description provided in FIG. **92**A is applicable to the projector assembly in FIG. **99**A as appropriate.

[0726] As described above, light from the projector assembly creates an image at the image plane, for example, the incoupling grating of the eyepiece, where the eyepiece is positioned. Some of the light from the projector assembly can be reflected from the elements of the eyepiece including the incoupling grating and return upstream towards the projector assembly. If the reflected light is not blocked, it could travel to and reflect off the display panel, resulting in artifacts or ghost images that are produced in the eyepiece. To prevent or reduce the intensity of these ghost images, embodiments of the present disclosure block most or all of the reflected light and prevent most or all of the reflected light from impinging on the display panel.

[0727] The projector assembly with artifact prevention **9900** includes an illumination source **9910**, which can be a collimated set of light beams. The illumination source **9910** can emit polarized, unpolarized, or partially polarized light. In the illustrated embodiment, the illumination source **9910** emits light polarized with a p-polarization. A first optical element **9915** (e.g., a pre-polarizer) is aligned to pass light with p-polarization to a polarizing beam splitter (PBS) **9920**. Initially, light passes through the interface **9922** of the PBS **9920** and impinges on spatial light modulator (SLM) **9930**. After reflection from the SLM **9930** and changing of the polarization to the s-polarization, the reflected light is reflected from interface **9922** and exits the PBS **9920**. The emitted light passes through projector lens **9940** and is imaged onto an incoupling grating **9950** of the eyepiece (not shown).

[0728] A portion of the incident light will reflect off of the incoupling grating **9950** and propagate back toward the projector assembly as illustrated by reflected ray **9902**. The projector assembly with artifact prevention includes an artifact prevention element **9960** that attenuates and preferably prevents reflections from the incoupling grating **9950** returning to the projector assembly. As illustrated in FIG. **99**A, reflections from the incoupling grating **9950** pass through the artifact prevention element **9960** in the downstream path, but are attenuated or blocked in the upstream path. Additional description related to the artifact prevention element **9960** is described in relation to FIGS. **101** and **102**.

[0729] FIG. **99**B is a flowchart illustrating a method **9951** of reducing artifacts in an optical system, according to one embodiment. The method **9951** includes injecting a light beam generated by an illumination source into a polarizing beam splitter (PBS) (**9952**) and reflecting a spatially defined portion of the light beam from a display panel (**9954**). The method (**9951**) also includes reflecting, at an interface in the PBS, the spatially defined portion of the light beam towards a projector lens (**9956**) and passing at least a portion of the spatially defined portion of the light beam through projector lens (**9958**).

[0730] The method (**9951**) further includes forming an image, by the projector lens, at an incoupling grating of an

eyepiece (**9960**) and reflecting, by the incoupling grating of the eyepiece, a return portion of the spatially defined portion of the light beam (**9962**). In some embodiments, one or more layers of the eyepiece can reflect a return portion of the spatially defined portion of the light beam at varying intensities. The light reflected from the one or more layers of the eyepiece is generally a lower intensity than the return portion of the spatially defined portion of the light beam reflected by the incoupling grating of the eyepiece. and attenuating, at an artifact prevention element, the return portion of the spatially defined portion of the light beam (**9964**). Forming the image can include passing at least a portion of the spatially defined portion of the light beam downstream through the artifact prevention element. In one embodiment, the artifact prevention element is disposed between the projector lens and the incoupling grating.

[0731] The artifact prevention element can include a first quarter waveplate, a linear polarizer disposed adjacent the first quarter waveplate, a second quarter waveplate disposed adjacent the linear polarizer, and a color select component disposed adjacent the second quarter waveplate. As an example, the first quarter waveplate can include an achromatic quarter waveplate operable to convert the spatially defined portion of the light beam to linearly polarized light. Moreover, the linear polarizer can pass the linearly polarized light downstream to the second quarter waveplate.

[0732] In an embodiment, the second quarter waveplate is operable to convert the linearly polarized light to elliptically polarized light. The color select component can be operable to convert the elliptically polarized light to wavelength dependent elliptically polarized light. For example, the return portion of the spatially defined portion of the light beam can impinge on the color select component. In this case, the color select component is operable to convert the return portion of the spatially defined portion of the light beam to an elliptically polarized return portion. The second quarter waveplate can be operable to convert the elliptically polarized return portion to a linearly polarized return portion. In this case, the linear polarizer attenuates the linear polarized return portion that is perpendicular to a defined polarization.

[0733] In some embodiments, the artifact prevention element may not include the first quarter waveplate, but may include the linear polarizer, the second quarter waveplate disposed adjacent the linear polarizer, and the color select component disposed adjacent the second quarter waveplate.

[0734] It should be appreciated that the specific steps illustrated in FIG. **99**B provide a particular method of reducing artifacts in an optical system, according to one embodiment. Other sequences of steps may also be performed according to alternative embodiments. For example, alternative embodiments of the present disclosure may perform the steps outlined above in a different order. Moreover, the individual steps illustrated in FIG. **99**B may include multiple sub-steps that may be performed in various sequences as appropriate to the individual step. Furthermore, additional steps may be added or removed depending on the particular applications. One of ordinary skill in the art would recognize many variations, modifications, and alternatives.

[0735] In some embodiments, the eyepiece includes an incoupling grating for each sub-pupil, which are each associated with the spatially dispersed light sources illustrated in FIGS. **90**A-**90**C. In some implementations, the incoupling grating can be metalized, which can result in reflections back toward the projection display assembly. Additionally, reflections from surfaces within the multi-layer eyepiece can contribute to back reflections.

[0736] The integration of the separated sub-pupil illumination system with the PBS-based projector assembly enables a compact design that is smaller and lighter than conventional designs. Thus, the PBS-based projector assembly provided by embodiments of the present disclosure utilizes a compact design that is suitable for integration into a wearable device.

[0737] In embodiments in which emissive display panels are utilized, for example, an OLED display panel, dielectric filters can be utilized on the waveguides to select the color appropriate for a given waveguide. As an example, emission from the OLED display would be imaged on the waveguides, with light for each waveguide passing through the filter into the waveguide whereas wavelengths associated with other waveguides would be reflected.

[0738] In some embodiments, foveated displays in which the image resolution varies across the image, are utilized as the display plane. Additional description related to foveated displays is provided in U.S. Patent Application Publication No. 2014/0218468, the disclosure of which is hereby incorporated by reference in its entirety for all purposes.

[0739] According to embodiments of the present disclosure, content can be rendered at a desired depth plane and also at a desired resolution. As an example, peripheral portions of the image can be displayed at lower (or higher) resolution and in the near depth plane while central portions of the image can be displayed at higher (or lower) resolution and in the farther depth plane, emphasizing the clarity of the higher resolution central (or peripheral) portion. Thus, embodiments provide improvements over foveated displays that have differing resolution in only a single plane since they can provide foveated images in three dimensions. Because embodiments described herein utilize multiple depth planes to represent a scene, a foveated display can provide a foveated image at each depth plane, resulting in three dimensional foveation that is not available using a foveated image in a single plane.

[0740] Embodiments of the present disclosure provide very fast switching speeds, for example, 720 Hz field rate update, which significantly reduces or eliminates color breakup effects. As an example, the display enables up to two simultaneous depth planes at a 120 Hz frame rate and three depth planes at an 80 Hz frame rate. In other embodiments, additional depth planes at these rates or higher or lower rates can be implemented. Additionally, embodiments of the present disclosure provide depth blending and support for 64 virtual depth planes. In other embodiments, more than or less than 64 virtual depth planes can be implemented. Both linear and nonlinear blending modes are supported as well as adjustments via a look up table. In addition to depth blending, scaler support is provided including scale adjustment for depth plane distortion/magnification changes due to optics.

[0741] In relation to horizontal/vertical shift support, embodiments described herein enable H/V shift support per layer and per frame, allowing for changes due to parallax effects in head movements and corneal positions. Additionally, embodiments provide lens distortion correction per color and per layer. First row frame updating allows changes of display data and parameters per frame on the first row as well as for the communication of time stamp information.

Moreover, vertical synchronization visibility is provided, allowing for round trip measurements and photon to photon measurements.

[0742] FIG. **100** illustrates reflection of light at an incoupling grating of an eyepiece in absence of a reflection prevention element. For an eyepiece with waveguides including incoupling gratings, some of the light directed to the incoupling grating will be launched into the waveguide and some of the light will be reflected (e.g., specularly reflected). Depending on the design, fabrication, and manufacturing sensitivities of the grating in the incoupling grating, the reflected light may not perfectly reverse the handedness of the light. In some cases, it may not modify the handedness at all. Thus, if a number of elements are present in a stack of waveguides and diffractive elements, the light reflected back to the projector may include a set of mixed polarization states.

[0743] Referring to FIG. **100**, circularly polarized light (e.g., RHCP) **10010** reflects from an incoupling grating **10005** of an eyepiece and is characterized by rotated elliptical return states. If the incoupling grating **10005** is attached to a waveguide, there may be a mix of states (from the incoupling grating **10005** and the waveguide) and there may be a state within the mix of states that dominates. In this example considering only reflections from the incoupling grating **10005**, reflected light **10020** of a first wavelength may have a left handed elliptical polarization state that has a major axis that is tilted with a negative slope. Reflected light **10030** of a second wavelength may have a left handed elliptical polarization state that has a major axis that is tilted with a positive slope. Accordingly, the eigenvalues of the incoupling grating **10005** define the transformation of the input light into different predetermined elliptical polarization states that are a function of wavelength.

[0744] Thus, embodiments of the present disclosure address the impact that the eigenvalues of grating structure of the incoupling grating **10005**, for example, blazed gratings, have on the polarization state of reflected light. In contrast with a planar reflective surface, which merely flips the handedness of input light, blazed gratings convert input light at different wavelengths into predetermined elliptical polarization states as illustrated in FIG. **100**. As discussed in relation to FIG. **98**, the reflections from the eyepiece, because of the various optical elements making up the eyepiece, as well as the characteristics of the ICG, including the utilization of blazed gratings, the polarization of the reflected light is not easily characterized. Rather, the polarization state of the reflected light can be characterized by complex elliptical polarizations.

[0745] FIG. **101**A illustrates blocking of reflections using an artifact prevention element according to one embodiment. Light impinges on an artifact prevention element **10100**. In one embodiment, there may be a circular polarizer (e.g., the circular polarizer **9510**) between a PBS (e.g., the PBS **9220**) and a projector lens (e.g., projector lens **9240**). In this embodiment, the light that impinges on the artifact prevention element **10100** is circularly polarized, as depicted in FIG. **101**A. As circularly polarized light **10010** impinges on the artifact prevention element **10100**, an achromatic quarter waveplate **10112** converts the circularly polarized light **10010** to linearly polarized light **10011**. The achromatic quarter waveplate **10112** converts all colors into linearly polarized light **10111** to achieve high transmission efficiency through a linear polarizer **10114**. In another embodiment, there may be no circular polarizer (e.g., the circular polarizer **9510**) between the PBS (e.g., the PBS **9220**) and the projector lens (e.g., projector lens **9240**). In this embodiment, the light that impinges on the artifact prevention element **10100** is linearly polarized and the artifact prevention element **10100** does not include an achromatic quarter waveplate **10112**. The linearly polarized light **10111** passes through the linear polarizer **10114** and is converted to elliptically polarized light **10118** by a second quarter waveplate **10116**. The second quarter waveplate **10116**, which is not necessarily achromatic, outputs the elliptically polarized light **10118** with a predetermined elliptical polarization. A color select component **10122** converts the various wavelength specific components of elliptically polarized light **10118** to different elliptical polarization states as the color select component **10122** rotates the polarization as a function of the wavelength. In other words, the color select component **10122** retards the phase by varying amounts as a function of wavelength. For example, the color select component **10122** rotates a polarization state of a first color band by 90 degrees while a complementary second color band retains its input polarization state. An exemplary color select component is a color selective rotator.

[0746] As illustrated in FIG. **101**A, light at a first wavelength **10130** is converted from elliptically polarized light **10118** to right handed elliptically polarized light with a negative slope major axis. Light at a second wavelength **10140** is converted from elliptically polarized light **10118** to right handed elliptically polarized light with a slightly positive slope major axis. After reflection from incoupling grating **10005**, light at the first wavelength **10130** is left handed elliptically polarized with a positive slope major axis (**10132**) and light at the second wavelength **10140** is left landed elliptically polarized with a slightly negative major axis (**10142**).

[0747] Given the eigenvalues of the incoupling grating **10005**, the conversion from the polarization state of **10130** to **10132** is determined. Accordingly, the properties of the color select component **10122** are determined to provide the desired polarization state **10130** given the elliptically polarized light **10118**. The color select component **10122** provides a predetermined conversion from elliptically polarized light **10118** to light at the first/second wavelength **10130**/**10140** such that, given the eigenvalues of the incoupling grating **10005** and the transformation resulting from reflection from the incoupling grating **10005**, the reflected polarization states (for each color) will be converted to elliptically polarized light **10120** that matches elliptically polarized light **10118**, but with the opposite handedness.

[0748] After passing through the color select component **10122**, light at both wavelengths are converted to left hand circularly polarized light elliptically polarized light **10120** that is matched (other than handedness) with elliptically polarized light **10118**. The second quarter waveplate **10116** converts elliptically polarized light **10120** to linearly polarized light **10113** that is rotated orthogonally with respect to linearly polarized light **10111** and is therefore blocked by linear polarizer **10114**.

[0749] Although specific handedness and rotation angles of the major axes of the ellipses has been discussed in relation to FIG. **101**A for purposes of explanation, embodiments of the present disclosure are not limited to these particular implementations and other handedness and ellip-

tical characteristics are included within the scope of the present disclosure. Additionally, although only two colors are illustrated, embodiments are applicable to three or more colors as appropriate to the particular application. One of ordinary skill in the art would recognize many variations, modifications, and alternatives.

[0750] In other words, after reflection from the eyepiece, specifically, the incoupling grating **10005**, the light passes through the color select component **10122** and is converted back to linearly polarized light by the second quarter waveplate **10116**. Because the handedness is rotated on reflection, the linearly polarized light is rotated on the upstream pass and is blocked by the linear polarizer **10114**, thereby preventing ghost images on the display panel.

[0751] FIG. **101**B is a flowchart illustrating a method **10150** of reducing artifacts in an optical system according to one embodiment. The method **10150** includes injecting a light beam generated by an illumination source into a polarizing beam splitter (PBS) (**10152**) and reflecting a spatially defined portion of the light beam from a display panel (**10154**). The method **10150** also includes reflecting, at an interface in the PBS, the spatially defined portion of the light beam towards a projector lens (**10156**) and passing at least a portion of the spatially defined portion of the light beam through the projector lens (**10158**).

[0752] The method **10150** further includes forming an image, by the projector lens, of at an incoupling grating of an eyepiece (**10160**) and reflecting, by the incoupling grating of the eyepiece, a return portion of the spatially defined portion of the light beam (**10162**). The method **10150** also includes passing, by a first optical element, the return portion of the spatially defined portion of the light beam to a second optical element (**10164**). The first optical element is operable to convert the return portion to a first polarization (e.g., a circular polarization). The first optical element can include a color select component. The method **10150** further includes passing, by the second optical element, the return portion of the spatially defined portion of the light beam to a third optical element (**10166**). The second optical element is operable to convert the return portion to a second polarization (e.g., a linear polarization). Additionally, the method **10150** includes attenuating, at the third optical element, the return portion of the spatially defined portion of the light beam associated with the second polarization (**10168**).

[0753] It should be appreciated that the specific steps illustrated in FIG. **101**B provide a particular method of reducing artifacts in an optical system, according to one embodiment. Other sequences of steps may also be performed according to alternative embodiments. For example, alternative embodiments of the present disclosure may perform the steps outlined above in a different order. Moreover, the individual steps illustrated in FIG. **101**B may include multiple sub-steps that may be performed in various sequences as appropriate to the individual step. Furthermore, additional steps may be added or removed depending on the particular applications. One of ordinary skill in the art would recognize many variations, modifications, and alternatives.

[0754] FIG. **102** illustrates blocking of reflections using an artifact prevention element **10200**, according to another embodiment. In this implementation, the positions of the second quarter waveplate **10116** and the color select component **10122** are switched in a manner analogous to a linear system in which the order of operations can be interchanged. The color select component **10122** converts linearly polarized light **10111** to different linear polarizations **10210** and **10220** as a function of wavelength. The second quarter waveplate **10116** then converts these different linear polarizations into desired polarization states **10130/10140** as discussed in relation to FIG. **101**A. The second quarter waveplate **10116** converts reflected elliptically polarized light at different wavelengths into linearly polarized light **10212/10222** that is rotated orthogonally to linearly polarized light **10210/10220**. As illustrated, a similar result is achieved as discussed in relation to FIG. **101**A, with reflected light blocked by the linear polarizer **10114**.

[0755] FIG. **103** is a schematic diagram of a projector assembly with multiple artifact prevention elements, according to one embodiment. A circular polarizer **10320**, which in this embodiment includes a linear polarizer **10321** and an achromatic waveplate **10323**, is positioned between a PBS **10310** and a projector lens **10330** to block or reduce reflections from the projector lens **10330**. The circular polarizer **10320** illustrated in FIG. **103** may also block or reduce reflections from the incoupling grating **10352**. In an alternative embodiment, the circular polarizer **10320** is positioned between the projector lens **10330** and the eyepiece **10350** to block or reduce reflections from the incoupling grating **10352**. The alternative embodiment may be used if the projector lens **10330** has a sufficient anti-reflective coating.

[0756] Additionally, a second artifact prevention element **10360** is positioned adjacent an eyepiece **10350**, specifically, an incoupling grating **10352** of the eyepiece **10350**. The second artifact prevention element **10360** blocks or reduces reflections from the incoupling grating **10352**. The second artifact prevention element **10360** includes an achromatic quarter waveplate **10361**, a linear polarizer **10363**, a second quarter waveplate **10365**, and a color select component **10367** as discussed in relation to FIG. **101**A that is matched to the color associated with the particular incoupling grating **10352** and associated waveguide (not shown).

[0757] FIG. **104**A is a schematic diagram illustrating a projector assembly with artifact prevention using color filters, according to one embodiment. The projector assembly illustrated in FIG. **104**A shares some common elements with the projector assembly illustrated in FIG. **99**A and the description provided in FIG. **99**A is applicable to the projector assembly in FIG. **104**A as appropriate.

[0758] The projector assembly with artifact prevention **10400** includes an illumination source **9910**, which can be a collimated set of light beams. The illumination source **9910** can emit polarized, unpolarized, or partially polarized light. In the illustrated embodiment, the illumination source **9910** emits light polarized with a p-polarization. A first optical element **9915** (e.g., a pre-polarizer) is aligned to pass light with p-polarization to a polarizing beam splitter (PBS) **9920**. Initially, light passes through the interface **9922** of the PBS **9920** and impinges on spatial light modulator (SLM) **9930**. After reflection from the SLM **9930** and changing of the polarization to the s-polarization, the reflected light is reflected from interface **9922** and exits the PBS **9920**. The emitted light passes through projector lens **9940** and is imaged onto incoupling grating **9950** of the eyepiece (not shown).

[0759] A set of retarder stack film (RSF) filters **10410**, **10412** are disposed adjacent the incoupling grating **9950** and incoupling grating **9960**, respectively. RSF filters **10410** and **10412** include multiple layers of polymer film placed

between polarizers, providing spectral properties including varying transmission as a function of wavelength. Additional discussion of RSF filters is provided in relation to FIG. **104**C.

[0760] As illustrated in FIG. **104**D, the RSF filters can be a split filter with a first region passing a first set of wavelengths and a second region passing a second set of wavelengths. In the downstream path, light directed toward incoupling grating **9950** passes through the RSF filters **10410** and impinges on the incoupling grating **9950**.

[0761] A portion of the incident light will reflect off of the incoupling grating **9950** and propagate back toward the projector assembly. As illustrated in FIG. **104**A, although the light incident on the incoupling grating **9950** can be in a single polarization (e.g., s-polarization), the light reflected from the incoupling grating **9950** can have a mixture of polarizations (A*s+B*p) **10402**, where A and B are coefficients between zero and one. The reflected light passes through projector lens **9940** and emerges with a mixture of polarizations (C*s+D*p) **10404** as it propagates back toward the PBS **9920**, where C and D are coefficients between zero and one. Generally, A>C and B>D as a result of the characteristics of projector lens **9940**.

[0762] Light in the upstream path that is properly aligned with the polarization of interface (C*s) **10406** reflects from interface **9922**, SLM **9930**, interface **9922**, passes through projector lens **9940**. In the absence of RSF filters **10410**, **10412**, the light (E*s) **10408** passing through projector lens **9940** would be imaged at a second incoupling grating **9960** of the eyepiece. However, the presence of the RSF filters **10412** attenuates or eliminates the image at the second incoupling grating **10452**, thereby reducing or preventing formation if the artifact or ghost image.

[0763] FIG. **104**B is an unfolded schematic diagram illustrating the projector assembly shown in FIG. **104**A. Light from the illumination source **9910** is collimated by the first optical element **9915**, propagates through the PBS **9920**, reflects off the SLM **9930**, makes another pass through the PBS **9920**, reflects off interface **9922** (not shown), and passes through projector lens **9940**. The light in the downstream path passes through RSF filter **10410**, and is imaged at the incoupling grating **9950**.

[0764] Reflected light passes through the RSF filter **10410**, passes through projector lens **9940**, passes through to into the PBS **9920**, reflects off the interface **9922** (not shown), and reflects off the SLM **9930**. The light passes through to into the PBS **9920**, reflects off the interface **9922**, propagates in the downstream path through projector lens **9940** and is blocked or attenuated by the RSF filters **10412**.

[0765] FIG. **104**C is a transmission plot for cyan and magenta color filters, according to one embodiment. Transmission values for the cyan filter **10410** are high, for example near 100% or 100% for blue and green wavelengths and decreases, for example, to near zero or zero for red wavelengths. In contrast, the transmission values for the magenta filter **10412** are high, for example near 100% or 100% for blue wavelengths, decrease, for example, to near zero or zero for green wavelengths, and are high, for example near 100% or 100% for red wavelengths.

[0766] FIG. **104**D is a schematic diagram illustrating spatial arrangement of color filters and sub-pupils, according to one embodiment. As illustrated in FIG. **104**D, light intended for a green incoupling grating **10470** will appear as an artifact at a red incoupling grating **10472**, which is disposed opposite the green incoupling grating **10470** with respect to the optical axis. Similarly, light intended for a green incoupling grating **10474** will appear as an artifact at a red incoupling grating **10476**, which is disposed opposite the green incoupling grating **10474** with respect to the optical axis. Light intended for the green incoupling grating **10470** will pass through the cyan filter **10410** during the initial pass from the projector lens to the eyepiece since the cyan filter **10410** has high transmission for green wavelengths. However, the artifact will be blocked or attenuated by the magenta filter **10412**, which has low transmission for green wavelengths. Accordingly, light intended for green incoupling grating **10470** will be passed, but the associated artifact that would impinge on red incoupling grating **10472** will be blocked or attenuated. Similar arguments apply for the pair including green incoupling grating **10474** and red incoupling grating **10476**.

[0767] Considering the light intended for red incoupling grating **10472**, the magenta filter **10412** will pass the intended light while the artifact will be blocked by cyan filter **10410**. Embodiments of the present disclosure utilizing RSF filters reduce reflections since they utilize an absorptive process and enable the customization of cutoff wavelengths for improved color balance and increased throughput. Moreover, some embodiments preserve the polarization of the light delivered to the incoupling grating, which is preferably linearly polarized in order to maximize coupling of light into the incoupling grating. In some embodiments, the six sub-pupils in FIG. **104**D (red incoupling grating **10476** and **10472**, green incoupling **10470** and **10474**, and blue incoupling grating **10480** and **10482**) can be located on or near the same plane, for example, incoupling grating plane **10484**. The incoupling grating plane can be located on a plane at the eyepiece. The RSF filters, cyan filter **10410** and magenta filter **10412**, can be located on a plane between the projector lens and the incoupling grating plane **10484**.

[0768] FIG. **104**E is a flowchart illustrating a method **10450** of reducing artifacts in an optical system, according to one embodiment. The method **10450** includes injecting a light beam generated by an illumination source into a polarizing beam splitter (PBS) (**10452**) and reflecting a spatially defined portion of the light beam from a display panel (**10454**). The method **10450** also includes reflecting, at an interface in the PBS, the spatially defined portion of the light beam towards a projector lens (**10456**) and passing at least a portion of the spatially defined portion of the light beam through the projector lens (**10458**).

[0769] The method **10450** further includes passing at least a portion of the spatially defined portion of the light beam through a first region of an RSF filter (**10460**) and forming an image, by the projector lens, at an incoupling grating of an eyepiece (**10462**) and reflecting, by the incoupling grating of the eyepiece, a return portion of the spatially defined portion of the light beam (**10464**). The method **10450** also includes attenuating at least a portion of the return portion at a second region of the RSF filter (**10468**).

[0770] It should be appreciated that the specific steps illustrated in FIG. **104**E provide a particular method of reducing artifacts in an optical system, according to one embodiment. Other sequences of steps may also be performed according to alternative embodiments. For example, alternative embodiments of the present disclosure may perform the steps outlined above in a different order. Moreover, the individual steps illustrated in FIG. **104**E may include

multiple sub-steps that may be performed in various sequences as appropriate to the individual step. Furthermore, additional steps may be added or removed depending on the particular applications. One of ordinary skill in the art would recognize many variations, modifications, and alternatives.

[0771] FIG. **105** is a schematic diagram illustrating a color filter system **10500**, according to one embodiment. As illustrated in FIG. **105**, the color filter system **10500** includes a cover glass **10510**, which can include an anti-reflection coating, a linear polarizer **10512**, a dual color RSF filter **10410**/**10412**, and a dual polarizer **10516**. The linear polarizer **10512** is aligned to pass a first polarization, for example, s-polarized light as received from the PBS **9920** and lens **9940**. The dual color filter **10514** is described in additional detail with respect to FIGS. **104**C and **104**D. The dual polarizer **10516** includes a first region **10517** and second region **10518**. First region **10517** is disposed adjacent cyan filter **10410** and passes light in the first polarization (e.g., s-polarized light). The second region **10518** is disposed adjacent magenta filter **10412** and passes light in a second polarization orthogonal to the first polarization (e.g., p-polarized light). As illustrated in FIG. **105**, light passing through the cyan filter **10410** will also pass through the first region **10517** in order to reach the green incoupling gratings **10470**, **10474**, and blue incoupling grating **10480**. Light passing through the magenta filter **10412** will also pass through the second region **10518** in order to reach the red incoupling gratings **10472**, **10476** and blue incoupling grating **10482**.

[0772] In some embodiments, for example, as illustrated in FIGS. **89** and **90**, a multi-pupil system in which the sub-pupils are spatially separated both laterally (e.g., in x, y directions) as well as longitudinally (e.g., in the z-direction) is utilized. In other embodiments, as illustrated in FIG. **109**, a single pupil system is utilized. FIG. **109** is a schematic diagram illustrating a single pupil system including a projector assembly and eyepiece, according to one embodiment. An artifact prevention element **10100** is illustrated as disposed between projector lens **10930** and eyepiece **10910**.

[0773] As illustrated in FIG. **109**, the pupils are overlapped laterally (e.g., in the x, y directions) and are only spatially separated longitudinally (e.g., in the z-direction). The projector lens **10930** directs light toward the eyepiece **10910**, which includes, in this example, three waveguide layers **10920**, **10922**, and **10924** for red, green, and blue wavelengths, respectively. It will be appreciated that other orders are included within the scope of the present disclosure, including green, blue, red. One of ordinary skill in the art would recognize many variations, modifications, and alternatives. Incoupling gratings for each waveguide layer overlap in the directions parallel to the plane of the waveguide, resulting in a single pupil system. As will be evident to one of skill in the art, the focusing of the light as it moves through the waveguides is not to scale.

[0774] Thus, embodiments of the present disclosure discussed herein are suitable for use with both multi-pupil and single pupil systems. In embodiments in which the pupils are overlapped laterally, the artifact prevention systems described herein will reduce or eliminate artifacts for these single pupil systems as light propagates through the optical system toward the eyepiece. As a result, embodiments of the present disclosure are applicable to both single pupil and multi-pupil systems.

[0775] Although embodiments of the present disclosure have been described in relation to projection display systems utilizing a display panel, embodiments of the present disclosure are not limited to these particular projection display systems and are applicable to fiber scanning systems that utilize a fiber scanner as a component of the projector. One of ordinary skill in the art would recognize many variations, modifications, and alternatives.

[0776] In some embodiments, collection efficiency with which light emitted by the light sources (e.g., LED sources) is collected and utilized by the projector assembly can be impacted by the design of light sources. In particular, for some LED light sources, it is beneficial to place collimating optics as close to the emission plane of an LED light source as possible.

[0777] FIG. **106** is a schematic diagram illustrating a wire bonded LED, according to one embodiment. A wire bonded LED package **10600** includes a sapphire substrate **10610**, which can be integrated with a metal reflector **10620**. A GaN LED **10630** is provided with a transparent electrode **10640** over a portion of an emission surface and wire bonds **10650** are attached to bonding pads **10660** over another portion. Heat dissipation **10670** through the sapphire substrate **10610** and light emission **10690** through the transparent electrode **10640** are illustrated. A portion of the light emitted by the LED impinges on and is blocked **10680** by the wire bond **10650** and/or the bonding pad **10660** to which the wire bond is bonded, creating a non-uniform illumination pattern as the wire bond obscures the illumination surface. In addition to non-uniform illumination, a wire bonded structure can present reliability issues associated with the potential motion/vibration of the wire bond in response to movement of the projector assembly. Additionally, environment degradation is presented as an issue. Although encapsulation of the wire bond could deter motion/vibration, it can also adversely impact the intensity of the light emitted.

[0778] FIG. **107** is a schematic diagram illustrating a flip-chip bonded LED **10700**, according to one embodiment. In this implementation, a GaN LED **10710** is disposed on a reflective structure **10720**, which can be a silver reflector, and sealed with a sapphire cap **10730**. Heat dissipation **10740** through the substrate **10750** and light emission through the sapphire cap **10730** are illustrated. In contrast with wire bonded structures, the flip chip geometry enables optics, including collimating or beam shaping optics such as a Compound Parabolic Concentrator (CPC) to be placed more closely to the emission surface, thereby increasing light collection efficiency and system brightness. Flip-chip LEDs mounted as illustrated in FIG. **107** are suitable for use as the displaced light sources illustrated in FIG. **88**.

[0779] FIG. **108** is a schematic diagram illustrating an LED integrated with a parabolic beam expander according to an embodiment described herein. As shown in FIG. **108**, a flip-chip bonded LED **10810** is positioned at the entrance aperture **10822** of a CPC **10820** utilized in a beam expander configuration. Light from the LED is characterized by a diverging beam profile, which is collected and expanded by the CPC **10820**. Accordingly, the use of the CPC **10820** in conjunction with the flip-chip LED design illustrated in FIG. **107** improves the light emission efficiency of the LED as a result of the removal of the wire bond and the ability to position the CPC at a position closer to the emission surface of the LED package.

[0780] FIGS. **110**A-**110**B show perspective views of an optical device **11000**. FIG. **110**A shows optical device **11000** in a fully assembled state. Optical device **11000** defines two opening within which two eyepieces **11001** can be held in precise registration with respect to one another and other components of optical device **11000**. To accomplish this, a rigid internal frame is utilized to maintain the precise registration. The internal frame can then be coupled to a more flexible front band **11004** that facilitates securing optical device **11000** to a user's head.

[0781] FIG. **110**B shows an exploded view of select components of optical device **11000**. One of skill in the art will appreciate additional components and/or alternate locations of any particular component are of course possible, but not necessary to depict for purposes of understanding the invention. Optical device **11000** is depicted having arms **11002** that are configured to extend past the ears of the user and wrap at least partially around the head of the user. It should be appreciated that in some embodiments, an optical device similar to optical device **11000** could have more conventional arms or temples **11002**. As depicted, arms **11002** cooperate with front band **11004** to secure optical device **11000** to the head of the user. Front band **11004** can be formed of a material capable of deforming so that front band **11004** is able to at least partially conform to the face of the user without deforming optics frame **11008**. A heat spreader **11006** can be used to create a robust thermal interface between front band **11004** and optics frame **11008**. Heat spreader **11006** can establish a robust thermally conductive pathway for transferring heat generated by electronic components mounted to optics frame **11008** to front band **11004**. In this way, front band **11004**, which can be formed from an aluminum alloy, can act as a heat sink for receiving heat generated by at least some of the electrical components of optical device **11000**.

[0782] FIG. **110**B also depicts projectors **11010** and their position relative to optics frame **11008**, though other configurations of projectors **11010** are possible. For example, projector **11010** could be positioned between eyepieces **11001**. Optics frame **11008** can be made from a material much stronger and with a higher elastic modulus than the material used to form the more flexible front band **11004**, such that in some embodiments external factors may deform front band **11004** without deforming optics frame **11008**. In such embodiments, front band **11004** can be characterized as absorbing these external factors such as temperature effects or load effects to preserve the material status of optics frame **11008** and the stability of the components it houses. For example, front band **11004** can be formed from a machined aluminum alloy, while optics frame **11008** can be formed from magnesium or titanium alloys. In some embodiments, front band **11004** can be coupled to both arms **11002** and attached to a central region of optics frame **11008**. For this reason, any symmetric forces applied to front band **11004** or arms **11002** can result in little or no deformation of optics frame **11008**. This configuration essentially allows optics frame **11008** to float within and be protected by front band **11004** and arms **11002**.

[0783] The exploded view of FIG. **110**B also shows projectors **11010**, which are secured to optics frame **11008** and configured to project an image through each of the eye openings occupied by eyepieces **11001**. A sensor cover **11012** can be coupled with optics frame **11008** and configured to cover sensors distributed around or adjacent to viewing optics **11012**. Sensor cover **11012** can be constructed from a different type of material than front band **11004**. In some embodiments, sensor cover **11012** can be formed from a polymer or another material with a low thermal coefficient of expansion unlikely to undergo substantial deformation from any heat received from optics frame **11008**. In some embodiments, sensor cover **11012** can be physically separated by a gap from front band **11004** to avoid overheating sensor cover **11012**. While the remaining figures will each illustrate multi-frame embodiments, it should be noted that embodiments with a unitary frame are also possible. Instead of having a deformable front band, rigid optics frame **11008** can be flexibly coupled to a pair of arms. The arms can be hinged and/or include springs and/or rails for moving the arms farther back on the head of a user without bending the rigid optics frame. In this way, distortion of the unitary frame can be avoided without utilizing a separate front band.

[0784] FIG. **110**C shows a perspective view of optics frame **11008** with multiple electronic components attached thereto. The electronic components include a central printed circuit board (PCB) **11014**, which is affixed to a bridge region of optics frame **11008**. In some embodiments, central PCB **11014** can include one or more processors configured to execute instructions for operating optical device **11000**. For example, the processor(s) can be configured to provide instructions to projectors **11010**. Many other electronic devices can also be coupled to optics frame **11008**. Sensors in particular can benefit from being coupled to optics frame **11008** on account of the rigidity of optics frame **11008** being able to maintain the position of the sensors in precise alignment with other sensors or eyepieces **11001** during operation of optical device **11000**. The sensors can include but are not limited to a depth sensor **11016**, front-facing world cameras **11018**, lateral-facing world cameras **11020** and a photo camera **11022**. In some embodiments, a world camera is an outward-looking video camera configured to help characterize the area around a user of optical device **11000** so that augmented reality imagery projected through eyepieces **11001** can be more realistically displayed and in some cases interact with the real world around it. Consequently, any misalignment of the sensors characterizing the outside world can result in the augmented reality imagery projected by projectors **11010** being noticeably shifted out of place with respect to corresponding real-world objects. Furthermore, any changes in pitch, yaw or roll of eyepieces **11001** with respect to each other during use can seriously degrade binocular calibration, resulting in serious imaging problems.

[0785] In some embodiments, various temperature sensors and strain sensors can be distributed across optics frame **11008**, front band **11004** and/or arms **11002**. The temperature and strain sensors can be configured to carryout multiple functions. For example, the temperature sensors can be configured to trigger a warning when optical device **11000** exceeds predetermined temperature comfort levels. Additionally, both the strain sensors and temperature sensors can be configured to determine when one or more of the sensors is shifted out of alignment. For example, a processor aboard PCB **11014** can include a table indicating how much thermal expansion or contraction to expect for a given temperature change. In some embodiments, when temperature or strain readings do indicate an out of alignment condition, projec-

tors **11010** can be directed to adjust the signal output or in some cases temporarily recalibrate optical device **11000** to accommodate the shift.

[0786] One common scenario in which a large change in temperature generally occurs is during startup of the wearable device after it has been out of use long enough to cool to room temperature. One way to account for the large temperature change is to configure the projector to shift its content to accommodate the output of the projector to account for the substantially cooler temperatures present in the frame during startup and before the electronics have the chance to raise a temperature of the device to a steady state temperature associated with normal operation. In some embodiments, the temperature change at startup can be large enough to cause deformation of the rigid frame resulting in an alignment problem between the projectors and the rigid frame. Because the regions of the rigid frame to which the projectors are affixed can include input coupling gratings associated with diffractive optics that reorient the light emitted by the projectors toward the eyes of the user, the resulting misalignment between the projectors and input coupling gratings can cause substantial distortion of the imagery being presented. Consequently, the content output of the projector can be shifted to account for the deformation. As the temperature approaches steady state, a temperature sensor sampling frequency can be reduced. In some embodiments, the temperature sensor sampling frequency could be increased when the wearable device is under heavy use or any time temperatures can be expected to increase above the normal steady state temperature of the wearable device.

[0787] Other electronic components are also depicted in FIG. **110**C. For example, a number of circuit boards and flexible circuits are depicted extending from each side of optics frame **11008** and are arranged to fit within an interior volume defined by a respective one of arms **11002**.

[0788] During use of optical device **11000**, heat can be dissipated from PCB **11014** by heat spreader **11006**, depicted in FIG. **110**D. Heat spreader **11006** is capable of conducting the heat emitted by the various electronic devices coupled to optics frame **11008** to front band **11004**. Heat spreader **11006** can be formed from sheets of material having particularly high thermal conductivity. In some embodiments, pyrolytic graphite sheets (PGS) can be used, which can be particularly effective at spreading heat given its excellent in-plane heat transfer characteristics. Other materials formed from high thermal conductivity materials are also possible. FIG. **110**D also depicts sensor cover **11012**, which includes various openings through which forward looking sensors can monitor objects in the user's line of site. For example, openings **11024** and **11026** can be configured to allow depth sensor **11016** and front-facing world camera **11018** to characterize the field of view in front of sensor cover **11012**. When sensor cover **11012** is coupled directly to optics frame **11008**, any thermally induced expansion or contraction of front band **11004**, which is being used to receive a large portion of the heat generated by components mounted to optics frame **11008**, can have minimal impact upon sensor cover **11012**.

[0789] FIG. **110**E shows a perspective view of optics frame **11008**. Of particular interest, projectors **11010** are depicted in full view as well as eyepieces **11001**. Eyepieces **11001** and projectors **11010** form at least a portion of a display assembly of optical device **11000**. Eyepieces **11001** are configured to receive light from projectors **11010** and redirect the imagery emitted by projectors **11010** into the eyes of a user of optical device **11000**.

[0790] FIGS. **111**A-**111**D show how heat is spread out along optical device **11000**. FIG. **111**A shows a perspective view of a rear portion of projector **11010** and surrounding circuitry. In particular, one end of heat spreader **11102** is shown affixed to a rear-facing surface of projector **11010**. Positioned in this way, heat spreader **11102** is configured to receive heat from a light source of projector **11010**. Heat spreader **11102** can take the form of a pyrolytic graphite sheet that is routed beneath projector **11010** and then along an interior surface of a band or temple of optical device **11000** (see the description of FIG. **111**C below). When heat spreader **11102** is formed of electrically conductive material, projector **11010** can be electrically insulated from heat spreader **11102** by an electrically insulating puck **11104**. In some embodiments, electrically insulating puck **11104** can be formed from aluminum nitride or other electrically insulating materials with good thermal conductivity.

[0791] FIG. **111**B shows another perspective view of a rear portion of projector **11010** and surrounding circuitry. In particular, a first end of a heat spreader **11106** is depicted and positioned to receive heat generated by a driver board positioned atop projector **11010** and also from the light source of projector **11010**. The second end of heat spreader **11106** is then routed along an opposite side of an arm **11002** (not depicted) from heat spreader **11102**. In this way, both interior and exterior sides of arm **11002** can be used in distributing heat generated by projector **11010**. In this way arms **11002** can also function as heat sinks for receiving and distributing heat generated by optical device **11000**.

[0792] FIG. **111**C shows a perspective view of one side of optical device **11000**. In particular, this view shows how heat spreader **11102** extends the length of arm. In this way, substantially the whole arm **11002** can act as a heat sink for absorbing heat generated by the components of optical device **11000**, such as projector **11010**.

[0793] FIG. **111**D shows a front perspective view of optical device **11000**. Conduction layer **11108** is shown overlaid upon a surface of PCB **11014** and is configured to transfer heat from various heat generating components distributed across PCB **11014** to heat spreader **11006**, which as described above distributes heat across front band **11004**. In some embodiments, front band **11004** and arms **11002** can be at least partially thermally isolated by rubber gaskets so that heat dissipation within the arms is limited primarily to heat received from projectors **11010** and front band **11004** is responsible for dissipating the rest of the heat generated by other electronic components of optical device **11000**. It should be noted that as the rubber gaskets heat up, heat can be transferred more easily between arms **11002** and band **11004**. In some embodiments, a heat-transferring pathway can be established between front band **11004** and arms **11002** by various heat transferring components. For example, a heat pipe or additional heat spreaders similar to heat spreader **11102** can be utilized to redistribute heat from portions of optical device **11000** subject to substantial amounts of heat loading. In some embodiments, the transfer of heat directly to arms **11002** can be preferable to shedding heat to front band **11004**, particularly when arms **11002** include electrical components that are less susceptible to heat damage than those attached to optics frame **11008**. The

various heat transfer mechanisms discussed can be configured to dissipate about 7 W of total power output.

[0794] FIG. **111**E-**111**G show perspective and side cross-sectional views of a heat dissipation system that utilizes forced convection as opposed to the passive convection illustrated in previous embodiments. FIG. **111**E shows heat dissipation system **11150** configured to draw heat away from various heat generating components **11168** (see FIG. **111**G) mounted on PCB **11014**. Heat generating components **11162** can include, for example, an electronic component such as a logic chip and may be involved in computer vision or other high-demand, high-powered processes. To prevent overheating of heat generating components **11168**, a first heat spreader **11152** can be thermally coupled to one or more of heat generating components **11168**. In some embodiments, a thermal interface **11170** (see FIG. **111**G), such as metal shield or thermal adhesive, may be disposed between heat generating components **11162** and first heat spreader **11152** to facilitate more efficient heat transfer. Other types of thermal interfaces or conduction layers known in the art may also be used and various thermal interfaces may be used in combination.

[0795] Heat from heat generating components **11162** moves across thermal interface **11164** into first heat spreader **11152** by conduction due to the presence of a temperature gradient over portions of heat dissipation system **11150**. A heat pipe **11154** may be used to facilitate conduction of heat from first heat spreader **11152** toward second heat spreaders **11156** positioned at opposing ends of heat pipe **11154**. Routing of heat from first heat spreader **11152** into heat pipe **11154** may occur by conduction when an exposed metal, or otherwise conductive material, portion of heat pipe **11154** is thermally coupled to first heat spreader **11152** by a thermal adhesive. Heat pipe **11154** can include an internal wicking structure that circulates a working fluid from the thermal interface between heat pipe **11154** and first heat spreader **11152** to the thermal interface between the ends of heat pipe **11154** where heat pipe **11154** interfaces with second heat spreaders **11156**. Second heat spreaders **11156** may be similarly thermally coupled to heat pipe **11154** at the opposing ends of heat pipe **11154**. Second heat spreaders **11156** may be thermally coupled to a heatsink or a forced convection device, such as fans **11158**. In some embodiments, heat spreaders **11156** can include an array of cooling fins to increase the effective surface area across which fans **11158** force cooling air.

[0796] FIG. **111**F shows a perspective view of heat dissipation system **11150** incorporated into a wearable device **11160**. An interior-facing wall of headset arms **11102** have been removed to show simplified interior view within headset arms **11102**. In some embodiments, as shown in FIG. **111**F, cooling air **11162** can be pulled into headset arms **11102** through vents **11164** defined by headset arms **11102**. Once cooling air **11162** convectively dissipates heat from second heat spreaders **11156**, cooling air **11162** can travel to the end of headset arms **11102** when the ends of the headset arms include additional exit vents. In this way, a robust flow of air can be established through headset arms **11102** giving the heated cooling air a robust route by which to exit headset arms **11102**. In other embodiments, vents **11160** may instead provide an exhaust route for heated air to exit headset arms **11102**.

[0797] In some embodiments, heat pipe **11154** may be made of a flexible material, such as a polymer material. The flexible heat pipe material may be configured to absorb mechanical strain or vibration in the system so that minimal, or zero, loading is transferred to heat generating component **11162** or other components coupled to PCB **11014** or front band **11004**. Heat pipe **11154** as shown has a flattened cross section; however, any other cross-sectional shape may be used to facilitate heat transfer and strain mitigation, such as circular, round, oval, or elongated. In some embodiments, the cross-sectional shape or size may be variable over portions of the heat pipe to achieve desired heat transfer characteristics.

[0798] Anchor points **11166**, which can take the form of fastens, secure heat pipe **11154** to front band **11004** may be configured to accommodate flexing of heat pipe **11154**. For example, it may be desired to minimize the number of anchor points **11166** to avoid over-constraining heat pipe **11154**. Allowing heat pipe **11154** to flex in response to strain may reduce loads transferred to electrical components. In addition to the number of anchor points, the locations of the anchor points may be considered. For example, it may be advantageous to place an anchor point along heat pipe **11154** at a location where minimal flexure is likely to occur in response to anticipated frame loading conditions. It may also be advantageous to route heat pipe **11154** along the stiffest portions of the frame to further reduce moment loading to sensitive components on board the frame. Furthermore, service loops **11167**, which take the form of U-shaped bends in heat pipe **11154** can be arranged to minimize any transmission of stress resulting from headset arms bending and flexing relative to front band **11004**. It should be noted that while a dual fan embodiment distributing heat to both headset arms **11102** is depicted, it should be appreciated that in some embodiments, heat pipe **11156** could only extend to one of headset arms **11102**.

[0799] FIG. **111**G shows a side view of heat distribution system **11150** and in particular shows how heat pipe **11152** is in thermal contact with heat generating component **11168** and PCB **11014** by way of thermal interface **11170** and heat spreader **11152**. In this way, heat pipe **11154** is able to efficiently offload heat from heat generating component(s) **11168**, allowing higher performance of wearable device **11160**.

[0800] FIG. **112**A shows a cross-sectional view depicting the transfer of heat from PCB **11014** through conduction layer **11108** to heat spreader **11006**. Conduction layer **11108** can be formed from a semi sealing material disposed within a polyethylene terephthalate (PET) pouch. The semi sealing material is a thermoplastic resin with very low contact thermal resistance that is capable of deforming to accommodate complex geometries. Conduction layer **11108** fills any gaps between heat spreader **11006** and PCB **11014** that would otherwise result due to the varied height of different electrical components mounted to PCB **11014**. In this way, heat conduction layer **11108** creates a robust heat transfer pathway for efficiently removing heat from each of the chips mounted to PCB **11014** and PCB **11014** itself. FIG. **112**A also shows how the surface of conduction layer **11108** defines regions for accommodating the various shapes of electronic components arranged along PCB **11014**. FIG. **112**B shows material properties of various thickness of one particular type of conduction layer **11108**.

[0801] FIGS. **113**A-**113**D show various heat maps overlaid on parts of optical device **11000**. The heat maps identify regions of higher heat loading during operation of optical

device **11000**. The heat maps are coded so that lighter colors correspond to higher temperatures. A legend is shown on the side of each heat map identifying ranges of degrees C. for each indicated region. The heat loading was analyzed in a room having an ambient temperature of 30 degrees C. FIGS. **113**A-**113**B show heat maps of optics frame **11008**. FIG. **113**A depicts optics frame **11008** and shows that heat loading is strongest in the center of optics frame **11008**. This can be caused primarily by the heat generated by PCB **11014**. In FIG. **113**B, optics frame **11008** and PCB **11014** are characterized using a heat map to identify heat distribution within optics frame **11008** and PCB **11014**. The hottest portion of PCB **11014** generally corresponds to a C-shaped region **11301** that can include one or more processors. It should be appreciated that while a specific distribution of heat is depicted herein, the distribution of heat across optical device **11000** can change in accordance with different types of use, durations of use and other environmental factors.

[0802] The distribution of heat within optics frame **11008** as depicted in FIGS. **113**A-**113**B can be controlled in many ways. In some embodiments, the thickness of optics frame **11008** can be varied. For example, portions of optics frame **11008** commonly subjected to above average amounts of heat loading can be thickened to increase the ability of that portion of optics frame **11008** to absorb and dissipate heat. In some embodiments, thickening portions of optics frame **11008** can also be beneficial as it can reduce the size of any air gaps between optics frame **11008** and front band **11004**. These types of adjustments can also be performed on areas of optics frame **11008** surrounding heat sensitive components so that the heat sensitive components can operate for longer periods of time without having to go into a reduced-functionality overheating protection mode. In some embodiments, optics frame **11008** can take the form of a heat distribution system that incorporates different materials to help in spreading heat across the frame. For example, plating the exterior surface of optics frame **11008** with a copper alloy or another highly thermally conductive material could also help distribute heat more evenly on account of copper alloys having a substantially greater thermal conductivity than most magnesium or titanium alloys. In some embodiments, pyrolytic graphite sheets could be adhered to both sides of optics frame **11008** in order to more evenly distribute heat across optics frame **11008**. Other solutions could involve incorporating thermally conductive composites, such as AlSiC, into optics frame **11008**. One benefit of AlSiC is that its alloys can be adjust so that its thermal expansion properties can match the thermal of other materials.

[0803] FIGS. **113**C-**113**D show heat maps characterizing the distribution of heat across front and rear surfaces of front band **11004**. FIG. **113**C shows how bridge region **11302** of front band **11004** only reaches a temperature of about 65 degrees C., which is substantially lower than the 90+ degree temperatures associated with portions of optics frame **11004**. FIG. **113**D illustrates how much cooler front band **11004** can remain than optics frame **11008**. This large reduction in temperature can be critical for user comfort and long-duration use of optical device **11000** since a user of optical device **11000** is most likely to be in direct contact with portions of front band **11004** and arms **11002**. This particular illustration also shows how front band **11004** can be coupled to optics frame **11008** by structural members **11304**, which are depicted as cylindrical protrusions. Structural members **11304** can take the form of any suitable mechanical connector. For example, the protrusions can take the form of boss structures for receiving screws. The central location of structural members **11304** prevents any substantial bending moments from being transferred to optics frame **11008**, thereby allowing front band **11004** to bend and flex near an interconnect with arms **11002** without substantially affecting optics frame **11008**.

[0804] FIG. **114**A shows a perspective view of an optical device **14000**. Optical device **14000** has an arm **14002** configured to rotate in the direction of arrow **14003** in order to accommodate a user with a larger head, while an arm **14004** can be fixedly coupled to a front band **14006**. FIGS. **140**B-**140**C show a top perspective view and a top view of optical device **14000**. FIG. **140**B shows an overlay illustrating which portions of optical device **14000** deform the most. By limiting deformation to arm **14002**, a position of arm **14004** with respect to front band **14006** can remain substantially unchanged when optical device **14000** is in use. In some embodiments, this type of configuration could allow for integration of various optical sensors into arm **14004** without having to worry about substantial shifts in the orientation of that sensor due to arm flex. FIG. **140**C shows a top view of optical device **14000** and a range of motion of arm **14002**. FIG. **140**D is provided for comparison with FIG. **140**B and illustrates how much more relative movement is generated when both arms **14002** and **14004** are allowed to bend and/or flex.

Grating Structures

[0805] Some embodiments may use nanograted eyepiece layers (e.g., ICG, OPE, and/or EPE) to pass images to a viewer's eye. FIG. **115** is a simplified diagram describing optimizations for an eyepiece of a viewing optics assembly according to some embodiments of the invention. The illustration shows a multi-level, stepped EPE **11500** that increases diffraction efficiency as compared to a binary, "top hat" structure. In some embodiments, the stepped structure includes a blazed grating that resembles a saw tooth structure. In some embodiments, the structure incorporates features associated with both binary gratings and blazed gratings. A binary grating diffracts light in both directions equally. A blazed grating may break the symmetry of the eyepiece, so the light travels in the desired direction, increasing efficiency and overall brightness. The multi-level, stepped structure illustrated in FIG. **115** decreases light traveling out toward the world as opposed to the viewer's eye, and suppresses light coupling into the eyepiece from the real world due to its selectivity.

[0806] Diffraction efficiency, luminance and uniformity of the EPE grating structure may also be increased by adjusting etch depth over space. Thus, good uniformity across the image may be achieved. In addition, increased efficiency of the eyepiece may be achieved by prioritizing light that is actually going to reach the pupil. Increased efficiency may also be achieved by better matching the photoresist placed on top of the glass substrate in the eyepiece structure. In general, the refractive index of the resist may be increased to match the high n of the substrate, resulting in better efficiency due to a lack of reflections from the interface of the resist.

[0807] Although described with respect to an EPE, it is contemplated that the optimized grating structures described herein may be similarly implemented on the OPE and/or the ICG. For example, increased efficiency may also be

achieved by reducing rebounce decoupling in the ICG by minimizing the chance that light has to bounce back.

Properties of Eyepiece Layers

[0808] Substrate properties for an eyepiece of a viewing optics assembly may vary according to some embodiments of the invention. In some embodiments, a very flat glass substrate with very low roughness and low total thickness variation (TTV) may be utilized. Low roughness may minimize scatter and thus maintain image contrast. Low TTV may allow for predictive performance with OPE dithering (described further herein). Low TTV may also reduce virtual image distortion that would otherwise need to be corrected in software with computation and resolution loss expense.

[0809] In some embodiments, the thickness of the eyepiece layers (including the substrate) may be optimized as well. For example, in one embodiment, each eyepiece layer may be between 300 to 340 um in thickness. Adequate out-coupled ray samples may provide the desired density for a human eye. Further, the thickness of the eyepiece layers may reduce the total number of bounces for the eyepiece. Adequate total internal reflection (TIR) bounce spacing (and adequate out-coupled ray spacing) may create uniform light distribution within the viewer's pupil. In addition, the thickness of the eyepiece layers may affect the rigidity of the eyepiece.

[0810] FIG. **116**A is a graph illustrating the total thickness variation (TTV) effect on field distortion for a dome apex in the EPE according to some embodiments. FIG. **116**B is a graph illustrating the TTV effect on field distortion for a flat substrate according to some embodiments. FIG. **116**C are graphs illustrating measured TTV according to some embodiments.

Manufacturing Process for Blazed Grating

[0811] In some embodiments, a manufacturing process may be used to implement gratings on an input coupling grating (ICG). Although described with respect to an ICG, it is contemplated that similar methods may be used to implement similar gratings on an OPE and/or EPE. In some embodiments, a combined blazed and binary grating is used for the ICG. For example, 3-1-1 cut silicon wafers may be used with a wet etch process to produce the blaze. In other examples, ion beam milling may be used, and/or piecewise blazed profiles with binary stair-step profiles.

[0812] FIG. **117**A is a simplified diagram illustrating a manufacturing process for a blazed grating structure according to some embodiments of the invention. The blazed grating structure described herein may be used, for example, on an ICG, an OPE, and/or an EPE. As shown in FIG. **117**A, a silicon wafer or other suitable material may be sliced at an angle, then deposited with an etch mask (e.g., SiO_2). The wafer may then be etched, e.g., with KOH. Because the wafer is sliced at an angle, the anisotropic etching that occurs results in a blazed grating in the silicon wafer (e.g., a triangular opening in the silicon wafer having an opening of 70.5 degrees in one example). FIG. **117**B shows photographs illustrating a blazed grating, e.g., for an ICG according to some embodiments of the invention, such as produced by the process of FIG. **117**A. As illustrated in FIG. **117**B, the angles associated with the gratings can be determined, in part, by the crystallography of the substrate being etched, for example, a blazed grating with an angle of 70.5 degrees with one surface tilted at 30 degrees with respect to the substrate surface. In some embodiments, <211> and/or <311> crystal planes are utilized, for example, in silicon substrates, thereby enabling an increase in the number of available substrates.

[0813] FIG. **117**C is a simplified diagram comparing a manufacturing process of a triangular grating structure to a blazed grating structure according to some embodiments of the invention. In both processes, the substrate and etch mask begin as illustrated at **11701**C. If a wafer is not sliced prior to etching, the wafer will be etched in a triangular fashion, as illustrated at **11702**C. If a wafer is sliced prior to etching, the wafer will be etched with a blazed grating, as illustrated at **11703**C. Accordingly, the slicing of the substrate at a predetermined angle results in the <111> planes of the silicon substrate being angled at angles other than 45 degrees with respect to the substrate surface, resulting in a blazed grating structure.

[0814] FIG. **117**D is a simplified diagram illustrating a flat-top ICG structure **11710**D as compared to a pointed-top ICG structure **11720**D according to some embodiments of the invention. The blazed ICG provides, on average, an input coupling efficiency in the first order of about 50%, whereas a binary ICG gives about 20%. In addition, a flat-top ICG structure **4410** gives higher first order diffraction efficiency versus a true blaze with a sharp top as illustrated by pointed-top ICG structure **11720**D. Although blazed gratings are discussed in relation to the ICG in some embodiments, embodiments of the present invention are also applicable to other diffraction structures, including the EPE and OPE. One of ordinary skill in the art would recognize many variations, modifications, and alternatives.

[0815] FIG. **118** is a simplified process flow diagram illustrating a manufacturing process of a blazed grating structure according to some embodiments of the invention. FIG. **118** shows the steps involved in fabricating controlled and optimal geometry to achieve a high efficiency waveguide device template in a silicon substrate. In one embodiment, the silicon substrate may be off-axis cut silicon. This template may be used to fabricate an ICG, an OPE, and/or an EPE, for example.

[0816] The fabrication method of FIG. **118** enables the patterning of different components (i.e., fields) of a waveguide device with a predetermined (e.g., the most optimum) nano- or micro-structure for each individual field, enabling high efficiency of the device on any large or small wafer scale format. The fabrication method uses wet and dry plasma etch steps in combination to pattern transfer various nano- and micro-patterns such as square, rectangular, or blazed gratings into desired substrate or material layers. The inclusion and use of sacrificial dummy fields (with same critical dimension and larger pitch or same pitch and smaller critical dimension) improves accuracy of critical etch timing in wet and dry processes. This aspect of controlling the top flat critical dimension is a way to control blazed grating depth to avoid light trapping, and is done in order to achieve a predetermined (e.g., the maximum) amount of efficiency for the waveguide pattern. The etched substrate can then be used as a template for pattern transfer using imprint lithography in a device production process.

[0817] Light waveguide devices can utilize different nano- and micro-patterns for various functions. The ability to vary pattern within and among various fields is this provided by some embodiments of the present invention as a feature of

the device fabrication process. The fabrication step also utilizes conventional process equipment to achieve this on a large wafer scale in sufficient quantities for production. Standard materials, patterning, process tools and equipment do not typically allow the fabrication of such devices on their own. The fabrication can, however, be achieved using certain materials in combination with certain processes, sacrificial patterns, and processing sequences.

[0818] According to fabrication methods described herein, using lithography processes (e.g., photolithography, imprint lithography, etc.), a primary pattern is fabricated over silicon dioxide on silicon with or without an adhesion layer and less than one degree of pattern alignment to the desired silicon crystal lattice axis at step **11801**. At step **11802**, a plasma process is used to remove residual layer thickness (RLT) of the imprint (if imprint lithography is used initially) and/or subsequently a dry etch is used to pattern transfer into the silicon dioxide layer. At step **11803**, a polymer (thick) layer is coated over the input coupler (IC) field and the substrate is dry etched at **11804** to pattern transfer in through the other fields into silicon. Polymers such as poly(vinyl alcohol), PMMA, PAAc, etc., may be used. This polymer layer prevents the etch transfer through the IC field.

[0819] At step **11805**, the etch pattern is stripped and cleaned and the other fields (non-IC) are covered with titanium metal and a second polymer layer with use of a mask at steps **11806**A and **11806**B. The titanium layer is deposited using PVD-type processes while shadow masking other fields. Based on IC proximity to other patterned fields and field size, titanium metal layer deposition can be avoided. The second polymer layer may be PVA, PMMA, PAAc, etc.

[0820] At step **11807**, with the IC field silicon exposed, a wet etching step (e.g., KOH) creates the desired blazed geometry along the {111} silicon crystal lattice plane. Wet etch rates may vary for varying pattern density (like pitch variation), silicon doping, etc. Etch rates may be controlled, for example, by using different concentrations of KOH.

[0821] Sixth, to get the desired (e.g., optimum) IC efficiency, the IC grating etched into silicon dioxide can be trimmed in the critical dimension (CD) width, to facilitate a wider and deeper blazed pattern at step **11808**. FIG. **119**A illustrates the characteristics of this blaze geometry once wet etched. FIG. **119**C shows the control of CD of the IC in silicon dioxide in creating a high efficiency IC. FIG. **119**B illustrates exemplary SEMs of four different CDs. This aspect of controlling the top flat CD as a way to control blazed depth to avoid light trapping is done in order to achieve a predetermined (e.g., maximum) amount of efficiency for the waveguide pattern. The wet etch to create the desired CD in the IC field can be done using an appropriately diluted BOE solution. Dilution ratios can be chosen so as to control the etch of silicon dioxide. For example, a wet etch process window of 35 seconds can be increased to 2 minutes by switching from 6:1 to 20:1 BOE solution. When the desired CD in the IC field is achieved, the fifth step described above creates the appropriate high efficiency blaze profile for the waveguide device. For wafer wet etch process control, dummy fields with smaller CD, same IC pitch or same CD, larger IC pitch can be present outside the device pattern area for wet etch timing purposes. For example, if the diffraction pattern visibility disappears from the dummy field during wet etch, this can signal the completion of wet etch to open the appropriate CD in the silicon dioxide for subsequent silicon wet etch.

[0822] Masking and patterning steps may be alternated and repeated to achieve variation in the pattern transfer profile from field to field over any wafer format. Eighth, the remaining polymer and/or metal layer are stripped and the substrate is cleaned and made ready for use as a template where this pattern is replicated in high throughput over large areas **11808**.

Imprint-Based Manufacturing and Lift Off

[0823] According to some embodiments, imprint-based manufacturing may be implemented. This type of manufacturing may result in low residual layer thickness and higher eyepiece efficiency. Jet and flash imprinting may be used and may replicate rapidly. Resist formulas may be implemented that enable jetting with high uniformity. Imprint-based manufacturing may be implemented on a variety of substrates, including polymer and glass substrates.

[0824] FIG. **120** is a simplified diagram illustrating imprint-based manufacturing according to some embodiments of the invention. At step **12005**, precise fluid resist drops are placed on a substrate. At step **12010**, a mask is placed on the substrate in contact with the fluid resist drops. At step **12015**, the fluid resist is polymerized using an ultraviolet light source. At step **12020**, the mask is separated from the substrate, leaving the polymerized resist on the substrate due to strong substrate adhesion. The resulting surface is illustrated as surface **12025**, with 50 nm lines and 50 nm spaces between lines.

[0825] FIG. **121**A is a simplified process flow diagram illustrating a manufacturing process of a patterned grating structure for a waveguide according to some embodiments of the invention. The patterned grating structure described herein may be used, for example, on an OPE and/or an EPE. In some embodiments, the patterned grating structure is constructed of high index inorganic material using imprinting and lift-off. High index inorganic materials may be difficult to etch via plasma etch processes currently used in the industry. Thus, some embodiments of the present invention implement a process to avoid etching the otherwise hard to etch materials, such as Cu and Ag. A lift-off process is used in which the high index inorganic material is only deposited (PVD) and patterned using a pre-patterned lift-off (solvent-soluble) layer over the desired substrate, such as high index glass or plastic.

[0826] FIG. **121**A illustrates the lift-off process, which enables patterning of inorganic high index materials such as TiO_2, ZnO, HfO_2, ZrO_2, etc. (i.e., metal oxides or inorganic materials with n>1.6). Such materials can be very difficult to etch using conventional ion plasma etch tools. At step **12101**A, a soluble layer is coated on a substrate. The soluble layer may be a water soluble polymer layer in one embodiment. A water soluble layer may be more compliant in a production line for large scale fabrication and with the use of polymer substrates where solvents other than water can react with the polymer substrate.

[0827] At step **12102**A, a pattern is imprinted in the soluble layer. One shot, large area patterning may be used on the deposited polymer layer using J-FIL in one embodiment. This avoids the use of an adhesive layer and overcomes

limitations of optical lithography on smaller areas and the need to use reactive solvents to develop the optical lithography resists.

[0828] At step **12103**A, etching is completed through and into the soluble layer. The imprinted cured polymer over the bottom sacrificial polymer layer etches at a different rate with a single etch chemistry. This produces an undercut necessary for the lift-off process. This also avoids the use of a secondary hard mask, to create an etch profile.

[0829] At step **12104**A, high index material is deposited onto the soluble layer and substrate. The high index material may be deposited using a vapor deposition technique (e.g., PVD) that allows for disconnects to exist, forming a discontinuous high index layer. The deposition parameters along with the etch profile can be controlled to get either a trapezoidal or triangular profile in some embodiments, as is illustrated in FIG. **121**C. FIG. **121**C is simplified diagram illustrating varying profiles of material deposited based on deposition parameters and etch profile according to some embodiments of the invention. A triangular profile may, for example, reduce haze of transmitted light through the pattern and substrate.

[0830] Turning back to FIG. **121**A, at step **12105**A, the soluble layer and high index material on the soluble layer is lifted off, leaving the patterned high index material on the substrate. This process allows for materials which otherwise cannot be patterned easily like high index metal oxides, inorganics, metal oxide-polymer hybrids, metals, etc., to be patterned at the 100 nm scale, for example, with high accuracy over glass or polymer substrates. FIG. **121**D illustrates 100 nm to 200 nm Ag lines patterned on a polycarbonate film over a >50 mm by 50 mm pattern area.

[0831] In other words, patterning is made possible by etching a soluble sacrificial layer and then using deposition techniques to deposit the high index materials. Photographs **12106**A, **12110**A, **12115**A of FIG. **121**A are SEM images showing patterned 190 nm wide and 280 nm tall Ag lines formed by the process described above. FIG. **121**B is a graph illustrating the refractive index of a ZrOx film deposited using a PVD type process according to some embodiments of the invention. The end patterned high index material can be used as an element of a functional waveguide when incorporated on a substrate.

Multi-Level Gratings

[0832] According to some embodiments, a multi-level binary grating can be used on a grating structure for a waveguide. The multi-level binary grating structure described herein may be used, for example, on an ICG, an OPE, and/or an EPE. Fabrication of multi-level (i.e., 3-D) micro- or nano-structures may use several lithography steps and be challenging as it may rely on sub-100 nm patterns and very high overlay accuracy. Some embodiments of the invention provide methods of fabricating high-resolution multi-level micro- or nano-structures and diffractive gratings with multiple binary steps, such as those shown in FIG. **122**. These embodiments of the invention simplify the overall fabrication process of multi-level structures and can be used to fabricate directly optical components or create nano-imprint molds.

[0833] For optical devices, triangular gratings may be desired due to their ability to manipulate light. At the nano-level, a triangular pattern is difficult to achieve; thus, a series of stepped gratings may be created to mimic a triangular pattern. The height of each step and the number of steps may be fixed based on current fabrication techniques. However, according to some embodiments of the invention, the number of steps may be increased and the height may be varied amongst the steps to create desired grating patterns more closely resembling and mimicking desired triangular patterns.

[0834] Fabrication of multi-level binary gratings may be typically achieved by multiple lithography steps with high alignment accuracy. Generally, the maximum number of levels (m) that can be generated with n number of lithography steps is given by $m=2^n$. The process is limited by the alignment precision of the lithography tool and the etching process. Both are challenging when the dimension of the features is sub-100 nm and usually lead to low quality of multi-level binary gratings for optical applications.

[0835] Some embodiments of the present invention provide processes of fabricating multi-level gratings with high quality, both in terms of sidewall and etch depth. According to some embodiments, a stack of "stop layers" is used to create multi-level gratings. In some embodiments, the first stop layer is optional. The other two stop layers allow for precise definition of the depth of each step in the gratings, increasing the quality of corners, and simplifying the etching process to one step and allowing for a high vertical profile. In other words, some embodiments allow for precise control over the profile and depth of each sub-grating, and utilize only one etching process.

[0836] FIG. **123** illustrates an iterative process where in each cycle, a layer of the substrate and the mask are deposited sequentially. Every cycle generates a level. In FIG. **123**, two cycle processes are shown (cycle 1: steps **12303**, **12304**, **12305**; cycle 2: steps **12306**, **12307**, **12308**). In some embodiments, the deposition of the final etch stop layer is made in step **12302**. After the creation of a 3D etching mask, a single etching process may result in a 3D process (step **12309**). In some embodiments, the final etch stop layer may be selectively etched away (step **12310**). The starting substrate shown in step **12301** may be, for example, silicon, quartz, or any other material.

[0837] A cycle (e.g., cycles 1 and 2) includes (I) depositing an added substrate layer (steps **12303** and **12306**), (II) depositing a stop etch layer (steps **12304** and **12307**), and (III) performing lift-off (steps **12305** and **12308**). At steps **12303** and **12306**, an added substrate layer may be deposited. This layer may be deposited by various methods (e.g., sputtering, evaporation, ALD, etc.), and may comprise films of materials that have good etching selectivity with a stop layer. In some embodiments, silicon, silicon dioxide, silicon nitride, and the like may be used. The thickness of the transfer layers may correspond to the height of the sub-gratings.

[0838] At steps **12304** and **12307**, lithography may be completed and a mask (i.e., a stop etch layer) may be deposited. Lithography may be performed with UV, E-beam lithography, NIL, or other techniques. The stop etch layer may be deposited by various methods (e.g., sputtering, evaporation, ALD, etc.). The stop etch layer may comprise metal(s) (e.g., Au, Al, Ag, Ni, Cr, etc.) or metal oxide(s) (e.g., SiO_2, TiO_2, etc.), or other materials, such as silicon, silicon nitride, and the like. In some embodiments, the thickness of the stop etch layer is between 2 nm and 40 nm.

[0839] At steps **12305** and **12308**, lift-off is performed. Depending on the resist used in the lithography process, a

specific solvent may dissolve the resist, leaving only the stop etch layer. In some embodiments, this step may be replaced by deposition and etching.

[0840] In some embodiments, "shadow" deposition of an etching mask is used to create multi-level gratings as illustrated in FIG. **124**. These embodiments allow processes having a reduced number of lithography steps. For example, as shown in FIG. **124**, only one lithography step is utilized to create a three level structure. The starting structure is a binary grating, which can be fabricated by any known process, such as lithography and etching, at step **12401**. A metal or dielectric mask layer may be deposited over the grating at an angle at step **12402**, and the directionality of the deposition and the shadowing of the grating of the metal film will partially cover the bottom of the trench. In some embodiments, sputtering, evaporation or any other directional depositional technique may be used to deposit the mask layer. In some embodiments, ALD is not used to deposit the mask layer. A clean area, w, is given by the equation,

$$w = \frac{h}{\tan(\theta)},$$

where h is the height of the trench and theta is the deposition angle. The same equation allows finding the deposition angle for any desired width. Due to the dependence on the height of the trench, the control and reproducibility of this approach decreases with the aspect ratio. The structure may then be etched using the mask layer as a mask, and the mask layer can be removed to form the multi-level binary grating structure shown at step **12403**. The process may be iterated to generate multiple layers.

[0841] FIG. **125** illustrates how different deposition angles result in different widths of the second step. For example, in process A, a 55 degree deposition angle is used in step **12501**A, resulting in 70% clean area in step **12502**A, and a narrow second step in step **12503**A. In process B, a 65 degree deposition angle is used in step **12501**B, resulting in 47% clean area in step **12502**B, and a medium width second step in step **12503**B. In process C, an 80 degree deposition angle is used in step **12501**C, resulting in 18% clean area in step **12502**C, and a wide second step in step **12503**C.

Graded Grating Duty Cycle

[0842] In some embodiments, the gratings described herein may have a graded duty cycle to reflect light in a graded manner. This may result in uniform intensity across an image output from the eyepiece. As described further herein, the eyepiece may receive input light from an ICG. The light may be coupled to the OPE, expanded, and propagated to the EPE to be reflected to a viewer's eye. As the light propagates through the grating area of one or more of these diffractive elements, it will typically decrease in intensity as light is outcoupled by the gratings as a result of diffraction. Therefore, the image output by the diffractive elements, for example, the EPE, may be characterized by a gradient in brightness as a function of position.

[0843] According to some embodiments, the duty cycle of the grating may be adjusted as a function of position. This may result in reduced light diffraction in regions where the light in the eyepiece layer has greater intensity and increased light diffraction in regions where the light in the eyepiece layer has reduced intensity. Thus, an image having uniform brightness may result through the use of graded duty cycle grating structures.

[0844] FIG. **126**A is a simplified plan view diagram illustrating a constant grating structure according to some embodiments of the invention. According to FIG. **126**A, light **12610** may be input into an eyepiece layer **12620** along a longitudinal direction (i.e., the z-direction). The eyepiece layer **12620** may be, for example, an ICG, OPE, and/or EPE, as described further herein. The eyepiece layer **12620** may have a plurality of gratings **12630** arrayed along the longitudinal direction. The gratings **12630** may be constant in the sense that they are solid and evenly spaced with respect to each other along the longitudinal direction.

[0845] FIG. **126**B is a graph illustrating light intensity output from the constant grating structure illustrated in FIG. **126**A according to some embodiments of the invention. As shown in FIG. **126**B, constant gratings **12630** may result in a continuous decrease in light intensity between the top surface **12602** of the eyepiece layer **12620** and the bottom surface **12604** of the eyepiece layer **12620** as the light propagates through the grating. This may result in decreased light available to be projected to a viewer from the portions of the grating structure associated with greater longitudinal positions (i.e., greater z values).

[0846] FIG. **127**A is a simplified plan view diagram illustrating a grating structure with a graded duty cycle according to some embodiments of the invention. According to FIG. **127**A, light **12710** may be input into an eyepiece layer **12720** and propagate along the longitudinal direction (i.e., the z-direction). The eyepiece layer **12720** may be, for example, an ICG, OPE, and/or EPE, as described further herein. The eyepiece layer **12720** may have a plurality of gratings **12730** arrayed along the longitudinal direction. The gratings **12730** may have a graded duty cycle in the sense that individual portions of each grating **12730** may be spaced apart in the lateral direction (i.e., the y-direction). The duty cycle may vary from a low duty cycle (i.e., low ratio of grating material to spacing between grating portions) to a high duty cycle (i.e., high ratio of grating material to spacing between grating portions). In some embodiments, the gratings **12730** may be manufactured using a scanning tool that allows for precision writing in the eyepiece layer **12720**. As illustrated in FIG. **127**B, the eyepiece layer **12720** can be characterized by an entry surface **12702** and a terminal surface **12704**.

[0847] FIG. **127**C illustrates a zoomed in view of the eyepiece layer **12720**. As shown in FIGS. **127**A and **127**C, the spacing **12734** in the lateral direction between the portions **12732** of each grating **12730** may depend on the longitudinal position (e.g., the position of the grating **12730** with respect to the entry surface **12702** and the terminal surface **12704** of the eyepiece layer **12720**). Thus, as compared to FIG. **126**A, the gratings **12730** may not be solid in the lateral direction, and may have differing spacings **12734** between individual portions **12732**. In the embodiment shown in FIG. **127**A, the gratings **12730** may be arranged with increasing duty cycle along the path of light **12710** propagation (i.e., in the longitudinal direction). In other words, the ratio of the lateral size of the portions **12732** of the grating **12730** to the spacing **12734** between adjacent portions may increase as a function of longitudinal position from the entry surface **12702** to the terminal surface **12704**.

[0848] The variation in duty cycle as a function of longitudinal position may be implemented such that the intensity emitted by the eyepiece layer **12720** is uniform or substantially uniform as a function of longitudinal position throughout the eyepiece layer **12720**. In some embodiments, the duty cycle may vary from 0% to 100% from the entry surface **12702** to the terminal surface **12704** of the eyepiece layer **12720**. In some embodiments, the duty cycle may vary from 50% to 90% from the entry surface **12702** to the terminal surface **12704** of the eyepiece layer **12720**. In some embodiments in which the eyepiece layer **12720** is an EPE, the entry surface **12702** may be the surface positioned closest to the OPE, while the terminal surface **12704** may be the surface positioned furthest from the OPE.

[0849] In some embodiments, such as that shown in FIG. **127**A, the gratings **12730** may be evenly spaced with respect to each other along the longitudinal direction. In other embodiments, however, the gratings **12730** may be variably spaced with respect to each other along the longitudinal direction. In some embodiments, the dithering techniques described herein may be combined with the graded duty cycle shown in FIG. **127**A to increase uniformity of the light intensity output to a viewer.

[0850] FIG. **127**B is a graph illustrating light intensity output from the grating structure with a graded duty cycle illustrated in FIG. **127**A according to some embodiments. As shown in FIG. **127**B, graded duty cycle gratings **12730** may result in constant light intensity output between the entry surface **12702** of the eyepiece layer **12720** and the terminal surface **12704** of the eyepiece layer **12720**. This constant intensity output may result in a more uniform light profile that is then available to be projected to a viewer further down the light path.

[0851] FIG. **128** is a flow diagram **12800** of an exemplary method of manipulating light by an eyepiece layer having a grating structure with a graded duty cycle according to some embodiments of the present invention. The method includes receiving light from a light source at an input coupling grating having a first grating structure characterized by a first set of grating parameters (**12810**).

[0852] The method further comprises receiving light from the input coupling grating at an expansion grating having a second grating structure characterized by a second set of grating parameters (**12820**). The method further comprises receiving light from the expansion grating at an output coupling grating having a third grating structure characterized by a third set of grating parameters (**12830**). At least one of the first grating structure, the second grating structure, and the third grating structure has a graded duty cycle. The duty cycle of the grating structure may increase from the surface of the eyepiece layer that receives the light to the surface of the eyepiece layer that outputs the light. The first set of grating parameters, the second set of grating parameters, and/or the third set of grating parameters may specify the duty cycle and the grading of the duty cycle across the eyepiece layer. The light intensity through the eyepiece layer may be constant. The method further comprises outputting light to a viewer (**12840**).

[0853] It is also understood that the examples and embodiments described herein are for illustrative purposes only and that various modifications or changes in light thereof will be suggested to persons skilled in the art and are to be included within the spirit and purview of this application and scope of the appended claims.

What is claimed is:

1. An eyepiece for projecting an image to an eye of a viewer, the eyepiece comprising:

a planar waveguide having a front surface and a back surface, the planar waveguide being configured to propagate light in a first wavelength range;

a grating coupled to the back surface of the planar waveguide and configured to diffract a first portion of the light propagating in the planar waveguide out of a plane of the planar waveguide toward a first direction and to diffract a second portion of the light propagating in the planar waveguide out of the plane of the planar waveguide toward a second direction opposite to the first direction; and

a wavelength-selective reflector coupled to the front surface of the planar waveguide and configured to reflect light in the first wavelength range and transmit light outside the first wavelength range, such that the wavelength-selective reflector reflects at least part of the second portion of the light back toward the first direction.

2. The eyepiece of claim **1** wherein the first direction is toward the eye of the viewer, and the second direction is away from the eye of the viewer.

3. The eyepiece of claim **1** wherein the wavelength-selective reflector is characterized by a reflectance spectrum having a reflectance peak in the first wavelength range.

4. The eyepiece of claim **3** wherein the first wavelength range corresponds to one of red light, green light, or blue light.

5. The eyepiece of claim **4** wherein the reflectance peak is characterized by a full-width-at-half-maximum that substantially matches a spectral band width of the light propagating in the waveguide.

6. The eyepiece of claim **4** wherein the reflectance peak is characterized by a full-width-at-half-maximum that is greater than a spectral band width of the light propagating in the waveguide.

7. The eyepiece of claim **1** wherein the wavelength-selective reflector comprises one of a multilayer thin film, a metasurface, or a volume phase hologram.

8. The eyepiece of claim **1** wherein the grating is optimized for diffracting light in a first polarization state toward the first direction and for diffracting light in a second polarization state orthogonal to the first polarization state toward the second direction, and the wavelength-selective reflector is optimized for reflecting light in the second polarization state.

9. An eyepiece for projecting an image to an eye of a viewer, the eyepiece comprising:

a first planar waveguide having a first front surface and a first back surface, the first planar waveguide being configured to propagate first light in a first wavelength range;

a second planar waveguide disposed substantially parallel to and in front of the first planar waveguide, the second planar waveguide having a second front surface and a second back surface and being configured to propagate second light in a second wavelength range;

a third planar waveguide disposed substantially parallel to and in front of the second planar waveguide, the third planar waveguide having a third front surface and a third back surface and being configured to propagate third light in a third wavelength range;

a first grating coupled to the first back surface of the first planar waveguide and configured to diffract a first portion of the first light propagating in the first planar waveguide out of a plane of the first planar waveguide toward a first direction and to diffract a second portion of the first light out of the plane of the first planar waveguide toward a second direction opposite to the first direction;

a second grating coupled to the second back surface of the second planar waveguide and configured to diffract a first portion of the second light propagating in the second planar waveguide out of a plane of the second planar waveguide toward the first direction and to diffract a second portion of the second light out of the plane of the second planar waveguide toward the second direction;

a third grating coupled to the third back surface of the third planar waveguide and configured to diffract a first portion of the third light propagating in the third planar waveguide out of a plane of the third planar waveguide toward the first direction and to diffract a second portion of the third light out of the plane of the third planar waveguide toward the second direction;

a first wavelength-selective reflector coupled to the first front surface of the first planar waveguide and configured to reflect light in the first wavelength range and transmit light outside the first wavelength range, such that the first wavelength-selective reflector reflects at least part of the second portion of the first light back toward the first direction;

a second wavelength-selective reflector coupled to the second front surface of the second planar waveguide and configured to reflect light in the second wavelength range and transmit light outside the second wavelength range, such that the second wavelength-selective reflector reflects at least part of the second portion of the second light back toward the first direction; and

a third wavelength-selective reflector coupled to the third front surface of the third planar waveguide and configured to reflect light in the third wavelength range and transmit light outside the third wavelength range, such that the third wavelength-selective reflector reflects at least part of the second portion of the third light back toward the first direction.

10. The eyepiece of claim **9** wherein the first direction is toward the eye of the viewer, and the second direction is away from the eye of the viewer.

11. The eyepiece of claim **9** wherein each of the first wavelength-selective reflector, the second wavelength-selective reflector, and the third wavelength-selective reflector comprises one of a multilayer thin film, a metasurface, or a volume phase hologram.

12. The eyepiece of claim **9** wherein each of the first wavelength-selective reflector, the second wavelength-selective reflector, and the third wavelength-selective reflector comprises a metasurface or a volume hologram optimized for a predetermined range of angle of incidence.

13. The eyepiece of claim **9** wherein:

the first wavelength range corresponds to red light;

the second wavelength range corresponds to green light; and

the third wavelength range corresponds to blue light.

14. The eyepiece of claim **13** wherein the first wavelength-selective reflector is configured to transmit green light and blue light, and the second wavelength-selective reflector is configured to transmit blue light.

15. The eyepiece of claim **13** wherein each of the first wavelength-selective reflector, the second wavelength-selective reflector, and the third wavelength-selective reflector comprises a metasurface or a volume hologram, and includes a plurality of regions, each region optimized for a respective range of angle of incidence corresponding to light rays reaching the eye of the viewer.

16. The eyepiece of claim **15** wherein the plurality regions partially overlap with each other.

17. The eyepiece of claim **9** wherein each of the first wavelength-selective reflector, the second wavelength-selective reflector, and the third wavelength-selective reflector comprises a metasurface including a plurality of interleaved regions, each region optimized for a respective range of angle of incidence.

18. An eyepiece for projecting an image to an eye of a viewer, the eyepiece comprising:

a first planar waveguide having a first front surface and a first back surface and configured to propagate first light in a first wavelength range;

a second planar waveguide disposed substantially parallel to and in front of the first planar waveguide, the second planar waveguide having a second front surface and a second back surface and being configured to propagate second light in a second wavelength range;

a third planar waveguide disposed substantially parallel to and in front of the second planar waveguide, the third planar waveguide having a third front surface and a third back surface and being configured to propagate third light in a third wavelength range;

a first grating coupled to the first front surface of the first planar waveguide and configured to diffract a first portion of the first light propagating in the first planar waveguide out of a plane of the first planar waveguide toward a first direction and to diffract a second portion of the first light out of the plane of the first planar waveguide toward a second direction opposite to the first direction;

a second grating coupled to the second front surface of the second planar waveguide and configured to diffract a first portion of the second light propagating in the second planar waveguide out of a plane of the second planar waveguide toward the first direction and to diffract a second portion of the second light out of the plane of the second planar waveguide toward the second direction;

a third grating coupled to the third front surface of the third planar waveguide and configured to diffract a first portion of the third light propagating in the third planar waveguide out of a plane of the third planar waveguide toward the first direction and to diffract a second portion of the third light out of the plane of the third planar waveguide toward the second direction;

a first wavelength-selective reflector coupled to the second back surface of the second planar waveguide and configured to reflect light in the first wavelength range and transmit light outside the first wavelength range, such that the first wavelength-selective reflector reflects at least part of the second portion of the first light back toward the first direction;

a second wavelength-selective reflector coupled to the third back surface of the third planar waveguide and

configured to reflect light in the second wavelength range and transmit light outside the second wavelength range, such that the second wavelength-selective reflector reflects at least part of the second portion of the second light back toward the first direction;

a front cover plate disposed substantially parallel to and in front of the third planar waveguide; and

a third wavelength-selective reflector coupled to a surface of the front cover plate, the third planar waveguide configured to reflect light in the third wavelength range and transmit light outside the third wavelength range, such that the third wavelength-selective reflector reflects at least part of the second portion of the third light back toward the first direction.

19. The eyepiece of claim **18** wherein each of the first wavelength-selective reflector, the second wavelength-selective reflector, and the third wavelength-selective reflector comprises a metasurface or a volume phase hologram, and includes a plurality of regions, each region optimized for a respective range of angle of incidence corresponding to light rays reaching the eye of the viewer.

20. The eyepiece of claim **18** wherein:

the first wavelength range corresponds to red light;

the second wavelength range corresponds to green light; and

the third wavelength range corresponds to blue light.

* * * * *