US 20180042556A1

(19) United States

(12) Patent Application Publication

SHAHPARNIA et al.

(10) Pub. No.: US 2018/0042556 A1

(43) Pub. Date: Feb. 15, 2018

(54) VITAL SIGNS MONITORING SYSTEM

(71) Applicant: **Apple Inc.**, Cupertino, CA (US)

(72) Inventors: **Shahrooz SHAHPARNIA**, Monte Sereno, CA (US); **Erno H. KLAASSEN**, Los Altos, CA (US)

(21) Appl. No.: **15/675,478**

(22) Filed: **Aug. 11, 2017**

Related U.S. Application Data

(60) Provisional application No. 62/374,615, filed on Aug. 12, 2016.

Publication Classification

(51) **Int. Cl.**

A61B 5/00	(2006.01)
A61B 5/0408	(2006.01)
A61B 5/0402	(2006.01)
A61B 5/0205	(2006.01)

(52) **U.S. Cl.**

CPC ***A61B 5/6892*** (2013.01); ***A61B 5/02055*** (2013.01); ***A61B 5/04085*** (2013.01); ***A61B 5/04028*** (2013.01); ***A61B 5/7278*** (2013.01); *A61B 5/02405* (2013.01)

(57) **ABSTRACT**

This relates to a monitoring system capable of measuring a plurality of vital signs. The monitoring system can include a plurality of sensors including, but not limited to, electrodes, piezoelectric sensors, temperature sensors, and accelerometers. The monitoring system can be capable of operating in one or more operation modes such as, for example: capacitance measurement mode, electrical measurement mode, piezoelectric measurement mode, temperature measurement mode, acceleration measurement mode, impedance measurement mode, and standby mode. Based on the measured values, the monitoring system can analyze the user's sleep, provide feedback and suggestions to the user, and/or can adjust or control the environmental conditions to improve the user's sleep. The monitoring system can further be capable of analyzing the sleep of the user(s) without directly contacting or attaching uncomfortable probes to the user(s) and without having to analyze the sleep in an unknown environment (e.g., a medical facility).

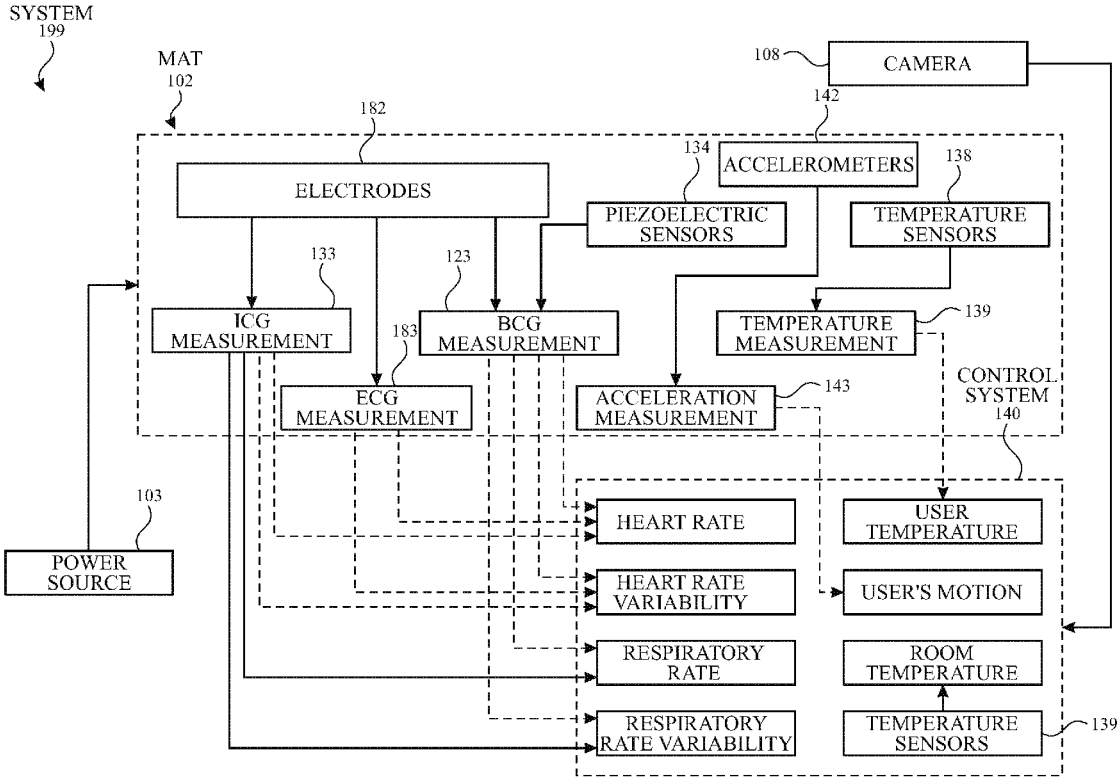

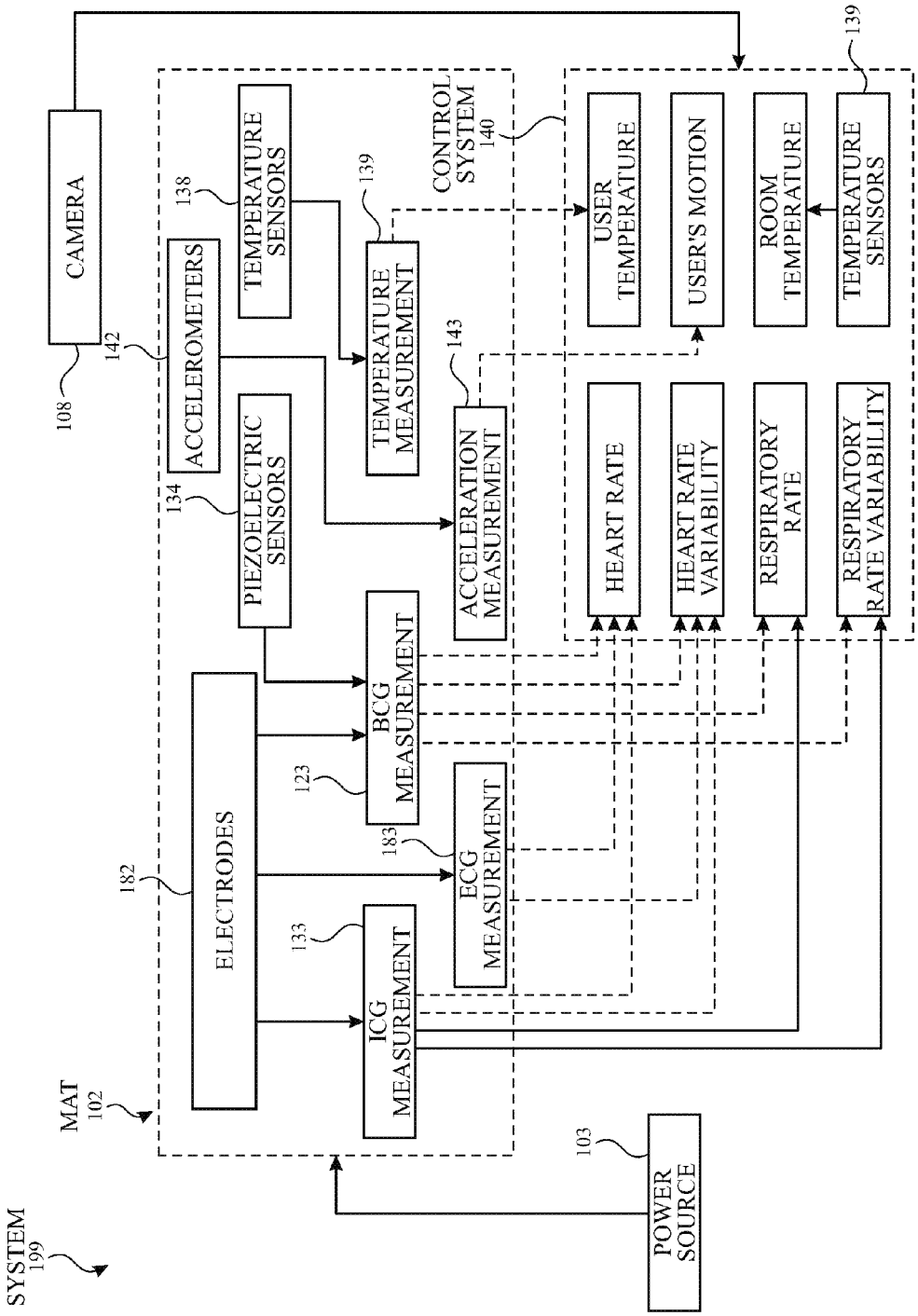
SYSTEM
199
MAT
102
CAMERA
108
ACCELEROMETERS
142
PIEZOELECTRIC SENSORS
134
TEMPERATURE SENSORS
138
TEMPERATURE MEASUREMENT
139
ACCELERATION MEASUREMENT
143
CONTROL SYSTEM
140
ELECTRODES
182
BCG MEASUREMENT
123
ECG MEASUREMENT
183
ICG MEASUREMENT
133
POWER SOURCE
103
USER TEMPERATURE
USER'S MOTION
ROOM TEMPERATURE
TEMPERATURE SENSORS
139
HEART RATE
HEART RATE VARIABILITY
RESPIRATORY RATE
RESPIRATORY RATE VARIABILITY

FIG. 1

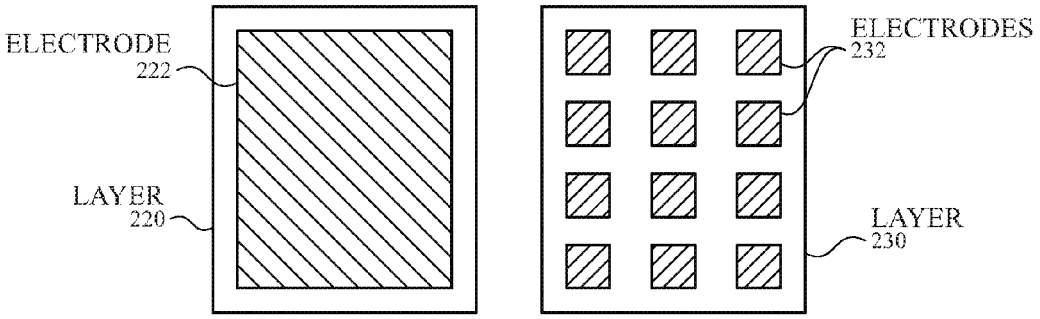

FIG. 2A

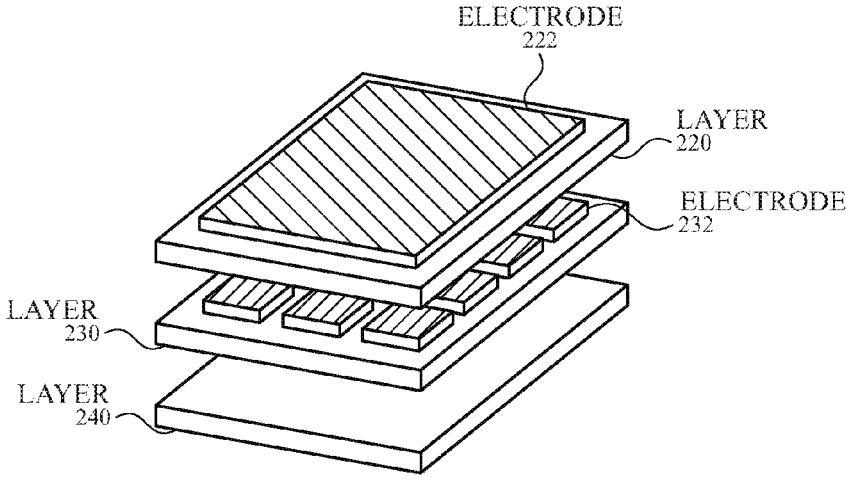

FIG. 2B

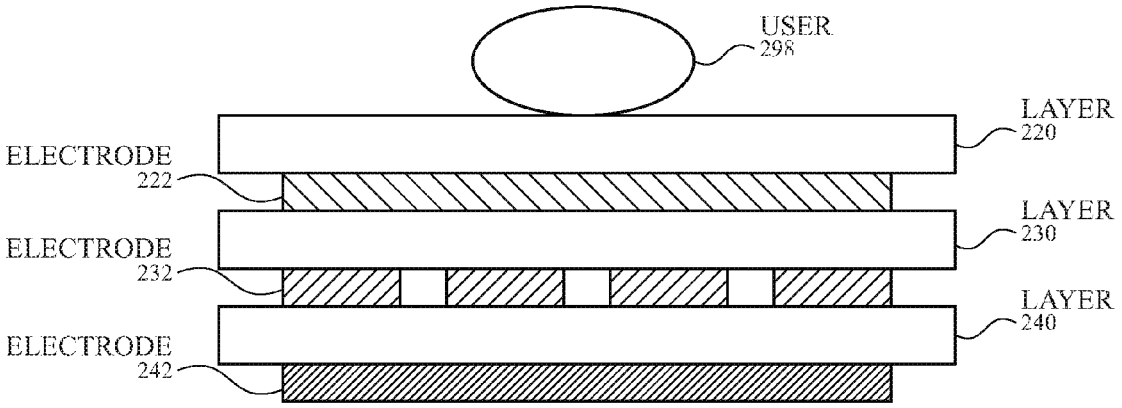

FIG. 2C

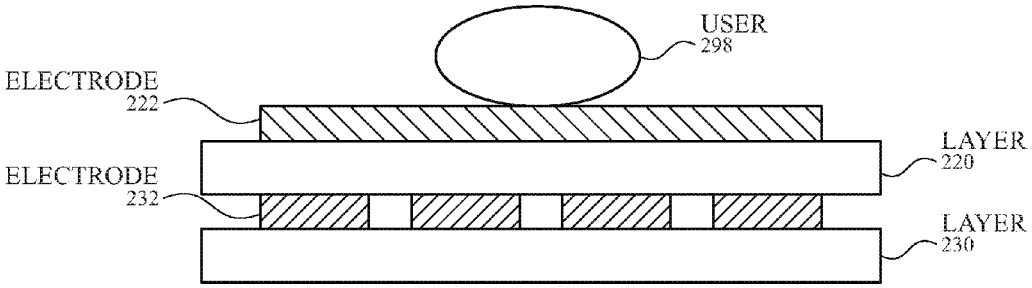

FIG. 2D

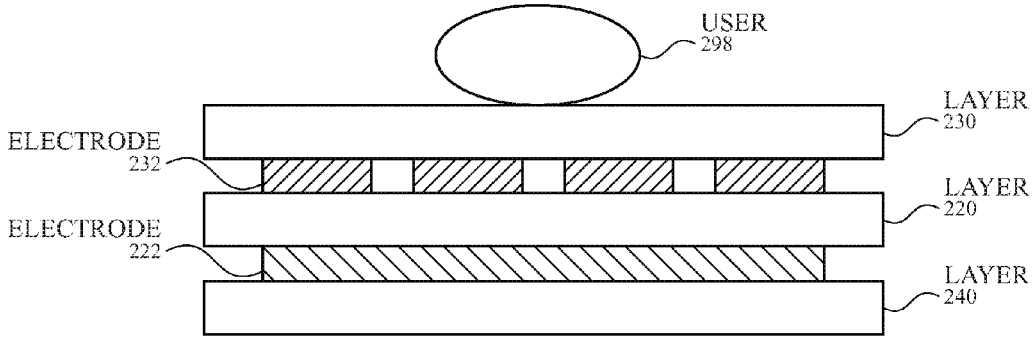

FIG. 2E

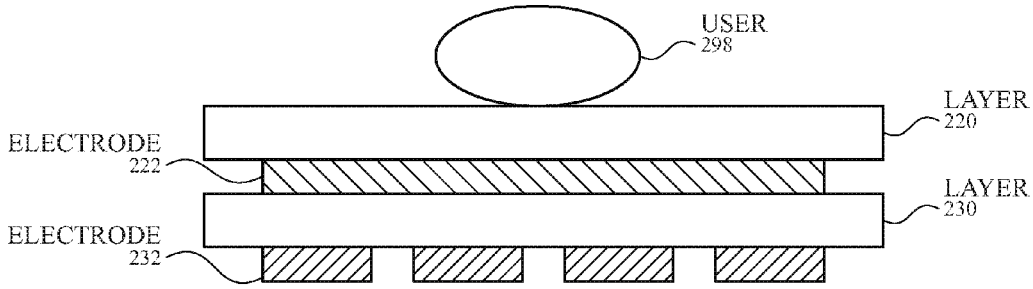

FIG. 2F

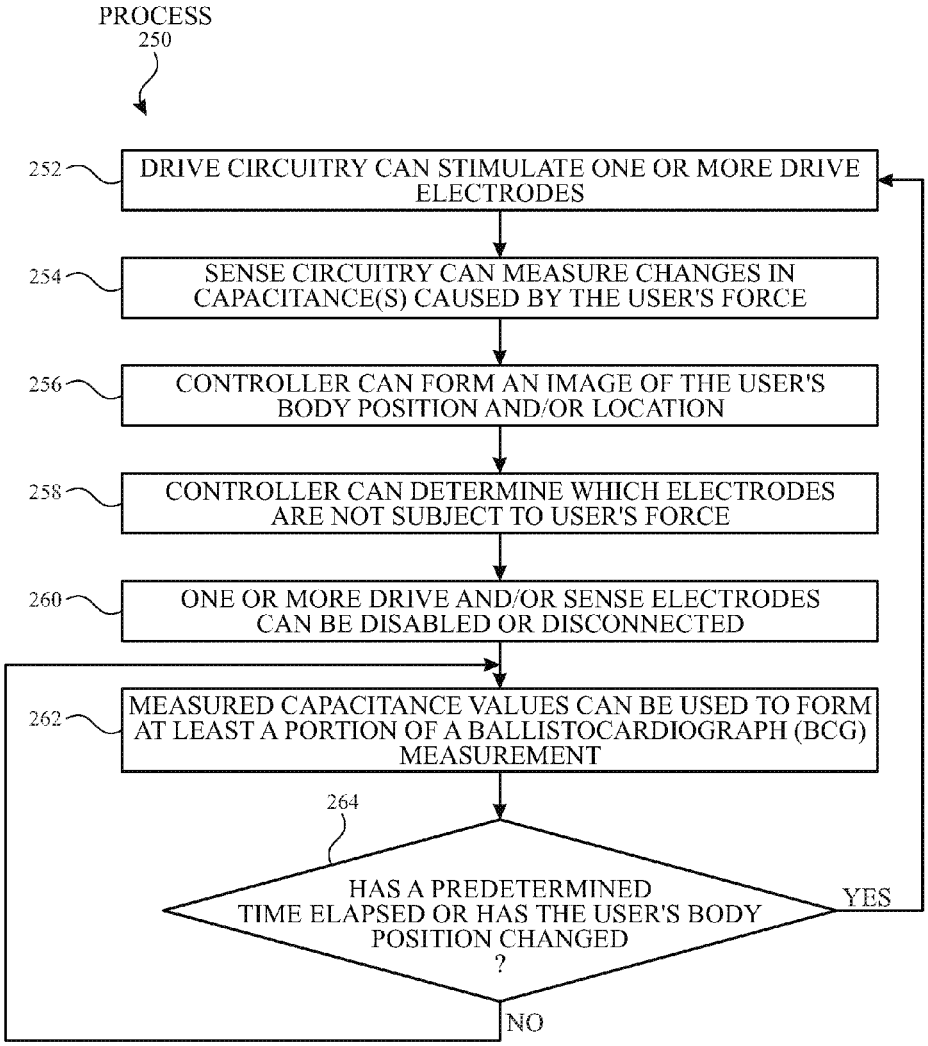
PROCESS
250
252
DRIVE CIRCUITRY CAN STIMULATE ONE OR MORE DRIVE ELECTRODES
254
SENSE CIRCUITRY CAN MEASURE CHANGES IN CAPACITANCE(S) CAUSED BY THE USER'S FORCE
256
CONTROLLER CAN FORM AN IMAGE OF THE USER'S BODY POSITION AND/OR LOCATION
258
CONTROLLER CAN DETERMINE WHICH ELECTRODES ARE NOT SUBJECT TO USER'S FORCE
260
ONE OR MORE DRIVE AND/OR SENSE ELECTRODES CAN BE DISABLED OR DISCONNECTED
262
MEASURED CAPACITANCE VALUES CAN BE USED TO FORM AT LEAST A PORTION OF A BALLISTOCARDIOGRAPH (BCG) MEASUREMENT
264
HAS A PREDETERMINED TIME ELAPSED OR HAS THE USER'S BODY POSITION CHANGED ?
YES
NO

FIG. 2G

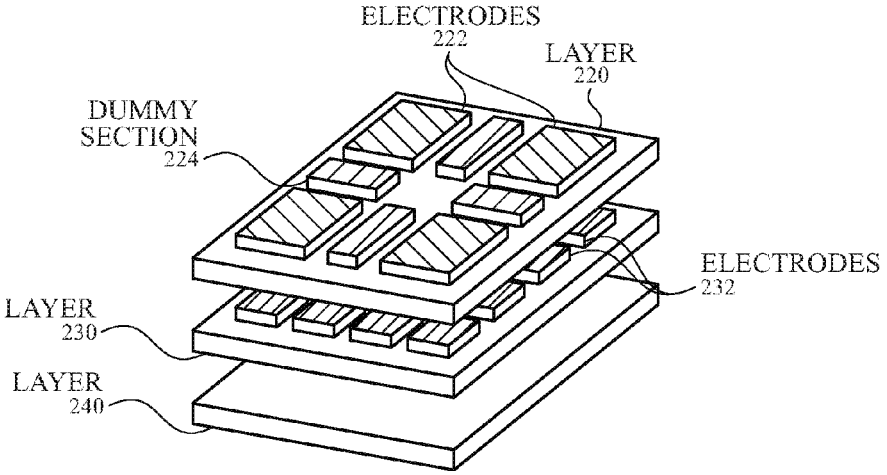
ELECTRODES
222
LAYER
220
DUMMY
SECTION
224
ELECTRODES
232
LAYER
230
LAYER
240

FIG. 2H

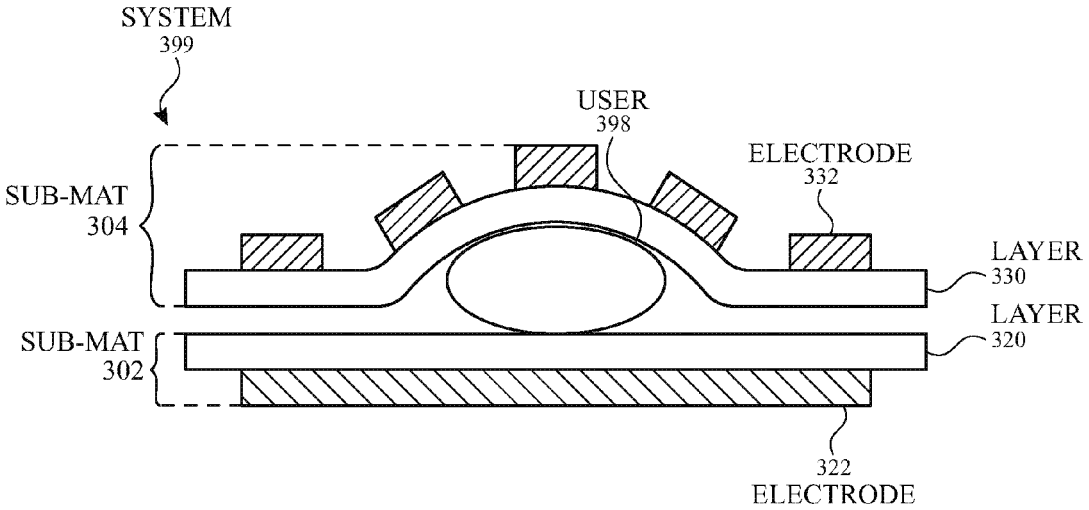
SYSTEM
399
USER
398
ELECTRODE
332
SUB-MAT
304
LAYER
330
LAYER
320
SUB-MAT
302
322
ELECTRODE

FIG. 3A

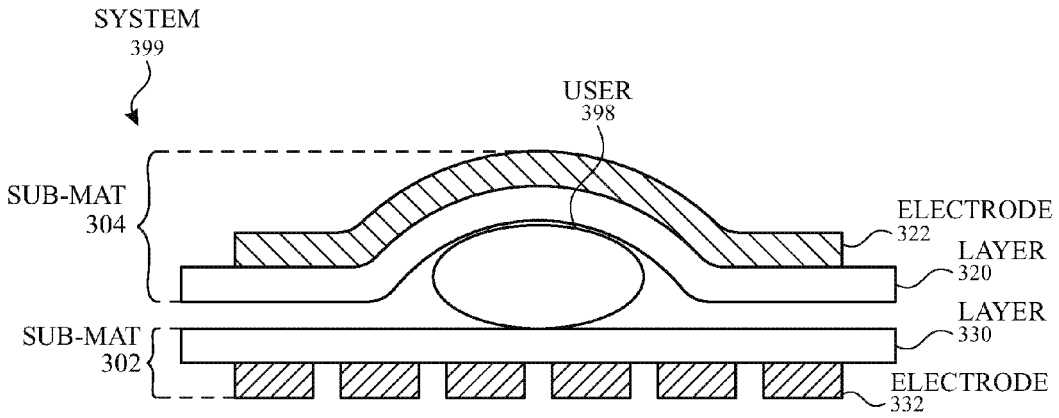
SYSTEM
399
USER
398
SUB-MAT
304
ELECTRODE
322
LAYER
320
LAYER
330
SUB-MAT
302
ELECTRODE
332

FIG. 3B

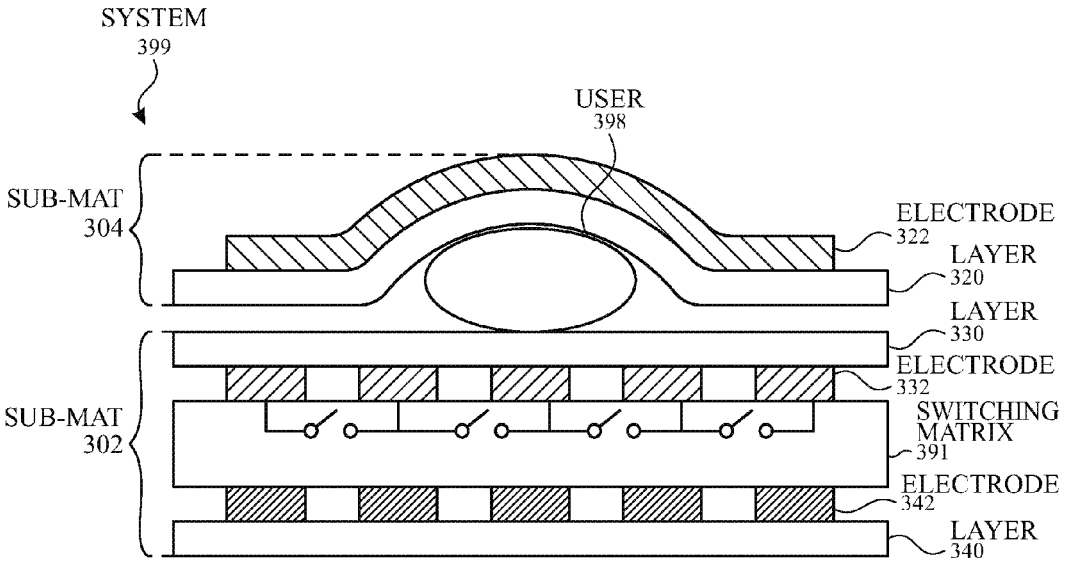
SYSTEM
399
USER
398
SUB-MAT
304
ELECTRODE
322
LAYER
320
LAYER
330
ELECTRODE
332
SUB-MAT
302
SWITCHING
MATRIX
391
ELECTRODE
342
LAYER
340

FIG. 3C

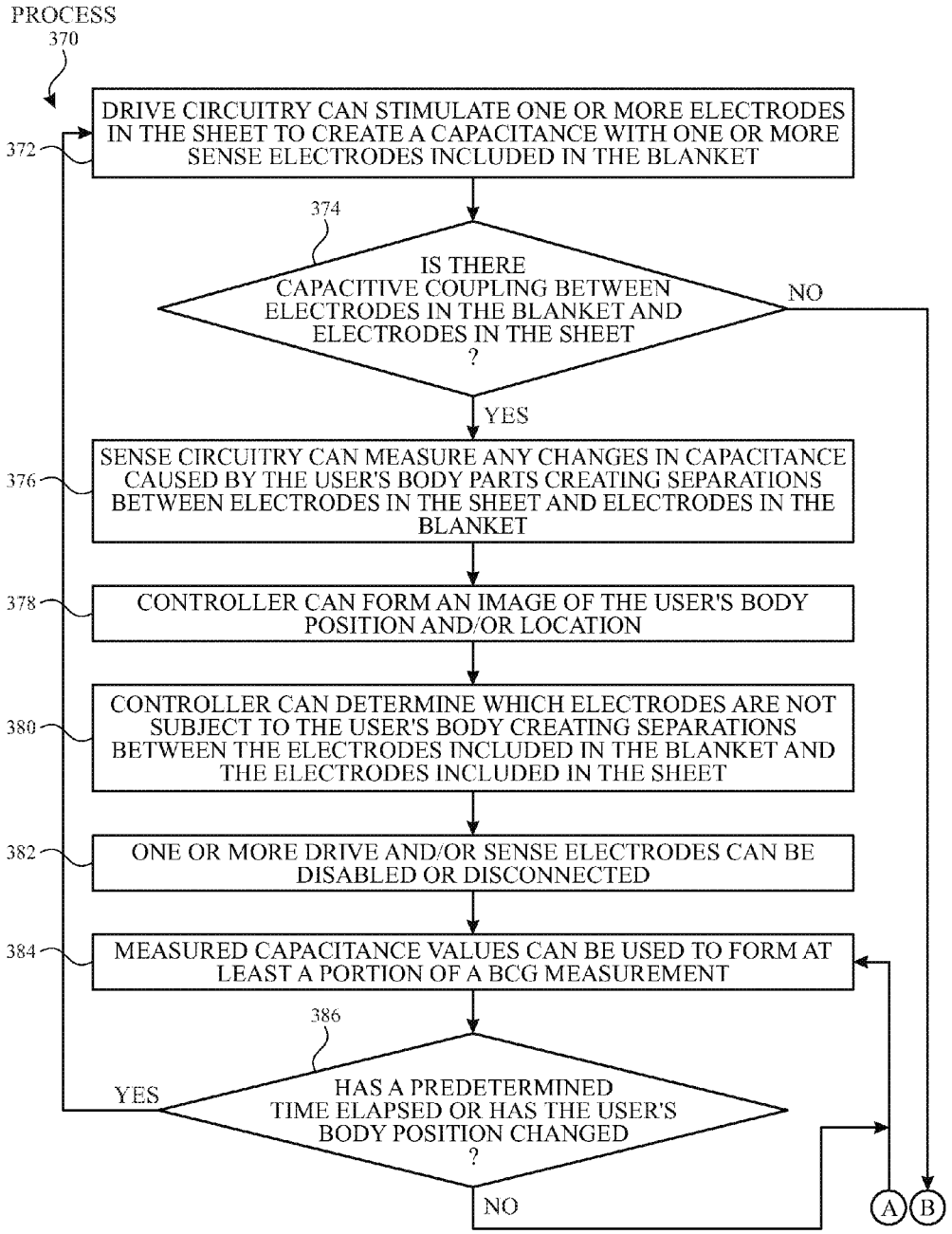
PROCESS
370
DRIVE CIRCUITRY CAN STIMULATE ONE OR MORE ELECTRODES IN THE SHEET TO CREATE A CAPACITANCE WITH ONE OR MORE SENSE ELECTRODES INCLUDED IN THE BLANKET
372
374
IS THERE CAPACITIVE COUPLING BETWEEN ELECTRODES IN THE BLANKET AND ELECTRODES IN THE SHEET ?
NO
YES
SENSE CIRCUITRY CAN MEASURE ANY CHANGES IN CAPACITANCE CAUSED BY THE USER'S BODY PARTS CREATING SEPARATIONS BETWEEN ELECTRODES IN THE SHEET AND ELECTRODES IN THE BLANKET
376
CONTROLLER CAN FORM AN IMAGE OF THE USER'S BODY POSITION AND/OR LOCATION
378
CONTROLLER CAN DETERMINE WHICH ELECTRODES ARE NOT SUBJECT TO THE USER'S BODY CREATING SEPARATIONS BETWEEN THE ELECTRODES INCLUDED IN THE BLANKET AND THE ELECTRODES INCLUDED IN THE SHEET
380
ONE OR MORE DRIVE AND/OR SENSE ELECTRODES CAN BE DISABLED OR DISCONNECTED
382
MEASURED CAPACITANCE VALUES CAN BE USED TO FORM AT LEAST A PORTION OF A BCG MEASUREMENT
384
386
HAS A PREDETERMINED TIME ELAPSED OR HAS THE USER'S BODY POSITION CHANGED ?
YES
NO
A
B

FIG. 3D-1

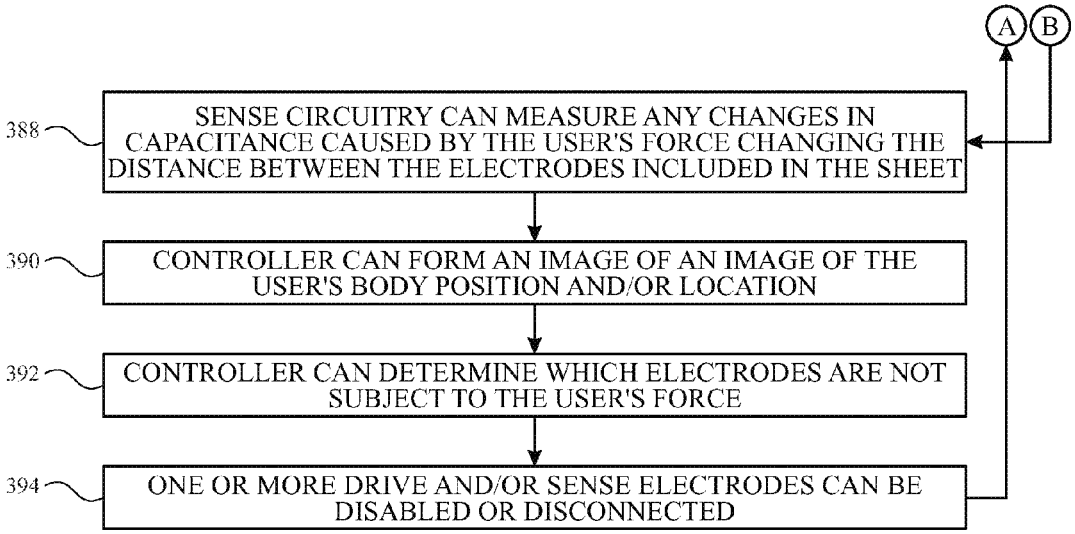

FIG. 3D-2

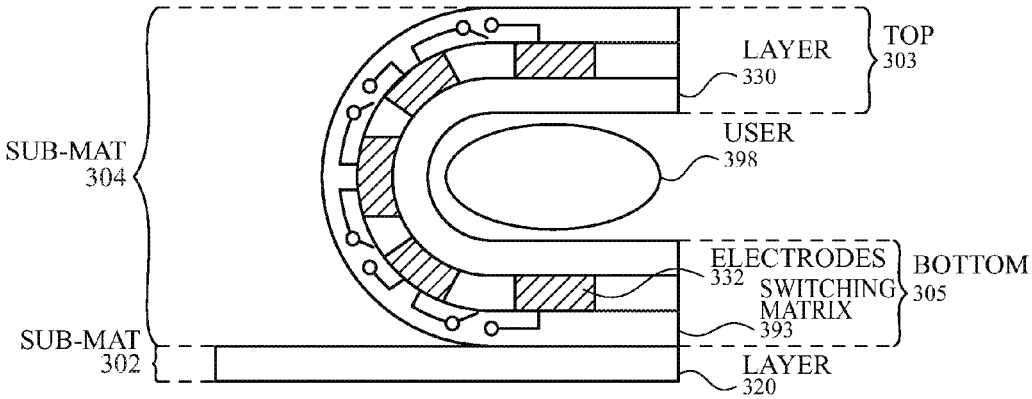

FIG. 3E

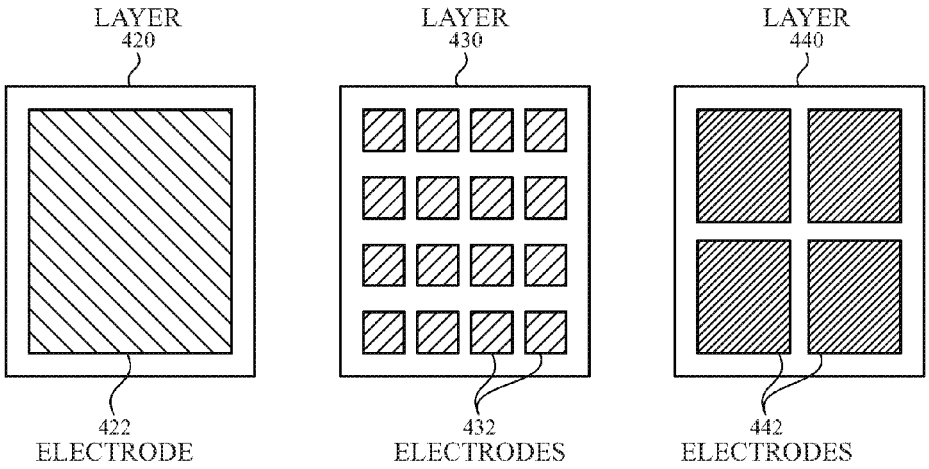

FIG. 4A

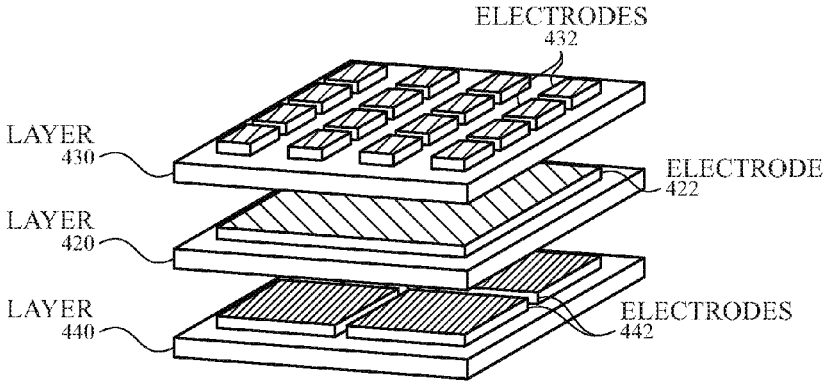

FIG. 4B

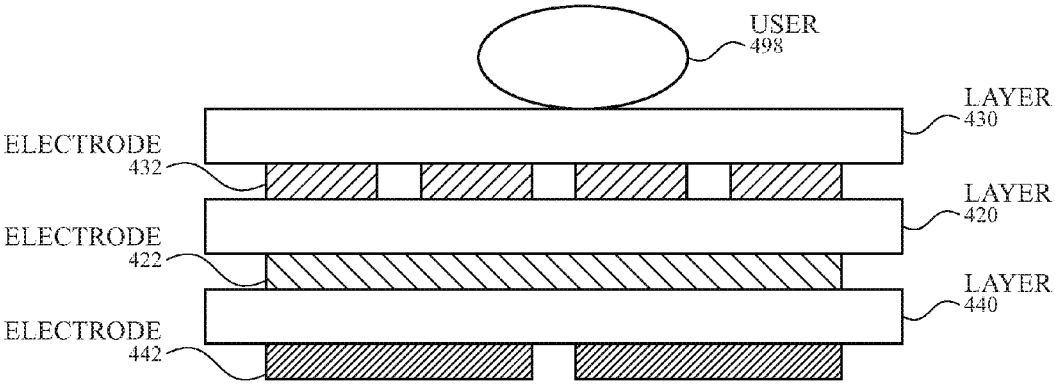

FIG. 4C

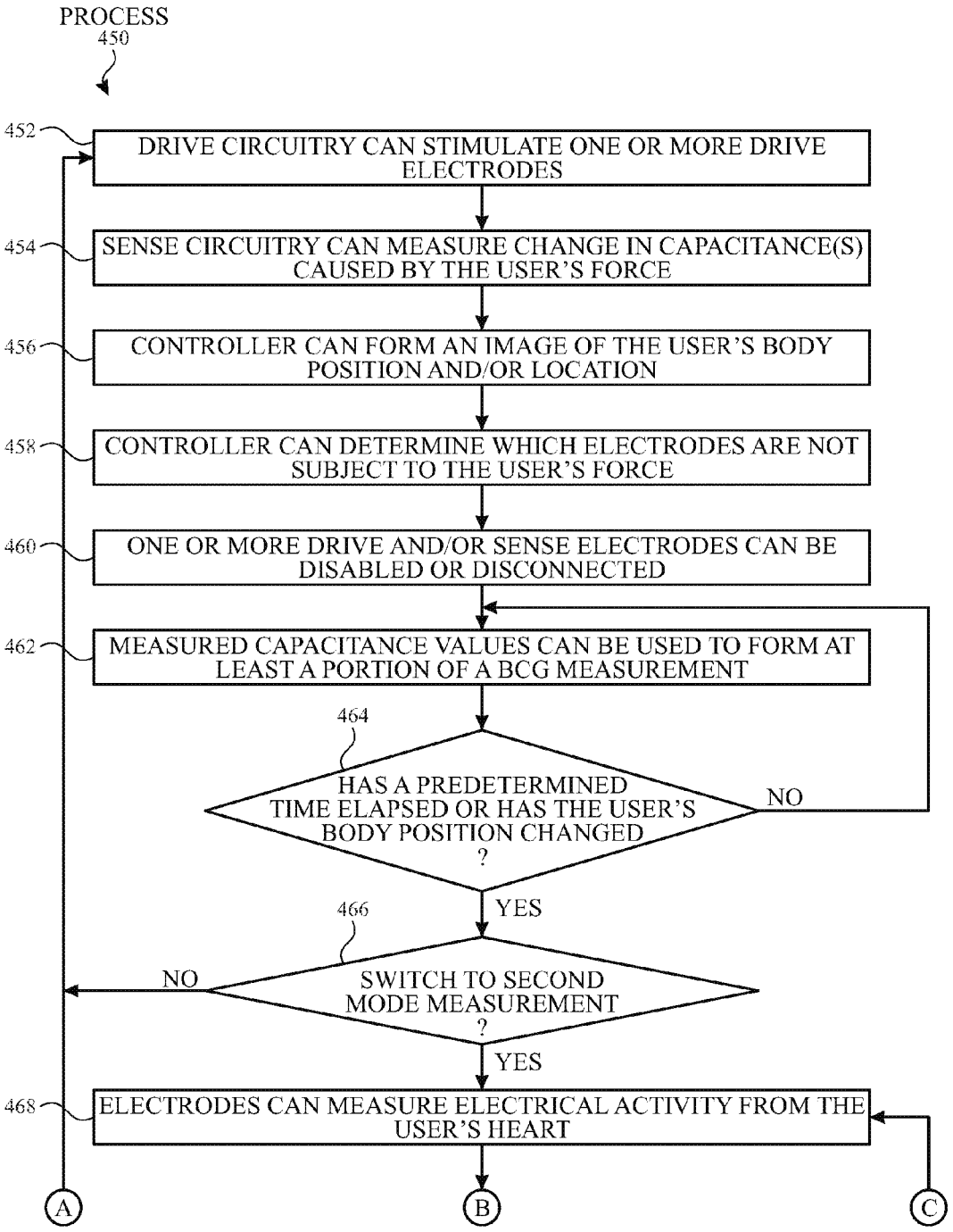
PROCESS
450
452
DRIVE CIRCUITRY CAN STIMULATE ONE OR MORE DRIVE ELECTRODES
454
SENSE CIRCUITRY CAN MEASURE CHANGE IN CAPACITANCE(S) CAUSED BY THE USER'S FORCE
456
CONTROLLER CAN FORM AN IMAGE OF THE USER'S BODY POSITION AND/OR LOCATION
458
CONTROLLER CAN DETERMINE WHICH ELECTRODES ARE NOT SUBJECT TO THE USER'S FORCE
460
ONE OR MORE DRIVE AND/OR SENSE ELECTRODES CAN BE DISABLED OR DISCONNECTED
462
MEASURED CAPACITANCE VALUES CAN BE USED TO FORM AT LEAST A PORTION OF A BCG MEASUREMENT
464
HAS A PREDETERMINED TIME ELAPSED OR HAS THE USER'S BODY POSITION CHANGED ?
NO
YES
466
SWITCH TO SECOND MODE MEASUREMENT ?
NO
YES
468
ELECTRODES CAN MEASURE ELECTRICAL ACTIVITY FROM THE USER'S HEART
A
B
C

FIG. 4D-1

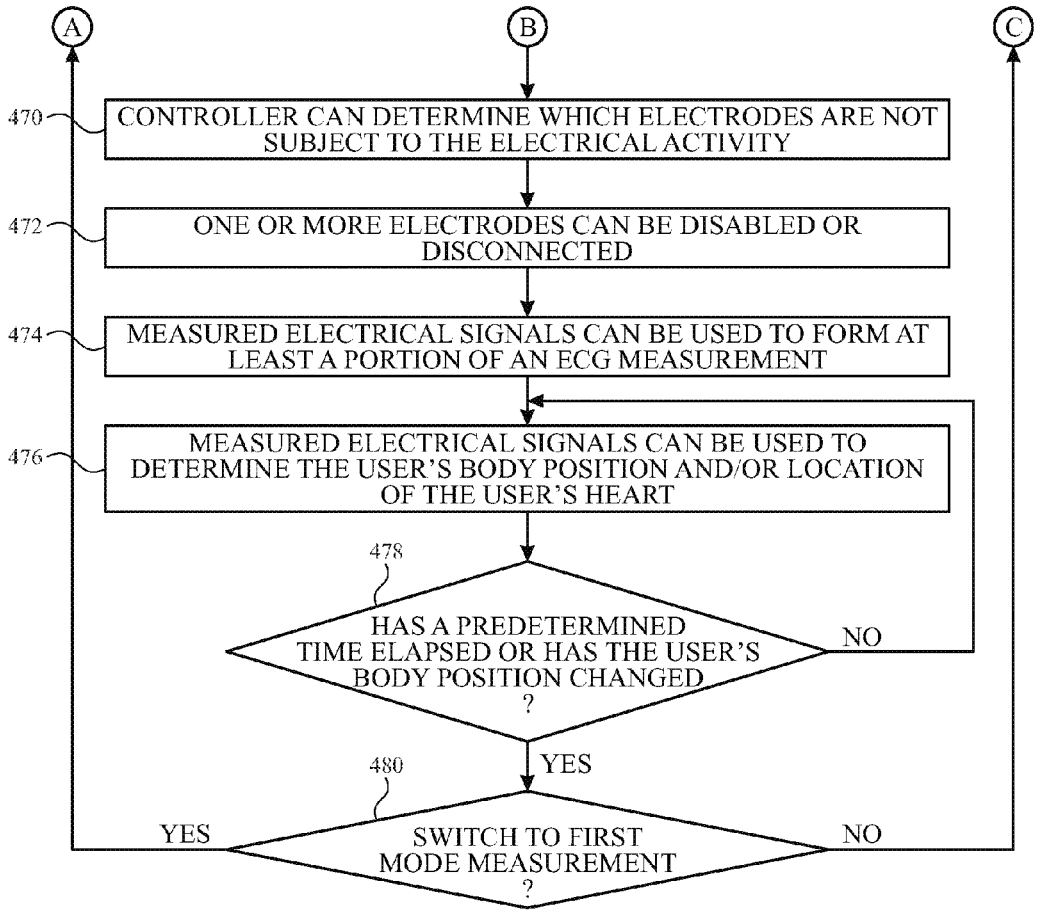
A
B
C
470
CONTROLLER CAN DETERMINE WHICH ELECTRODES ARE NOT SUBJECT TO THE ELECTRICAL ACTIVITY
472
ONE OR MORE ELECTRODES CAN BE DISABLED OR DISCONNECTED
474
MEASURED ELECTRICAL SIGNALS CAN BE USED TO FORM AT LEAST A PORTION OF AN ECG MEASUREMENT
476
MEASURED ELECTRICAL SIGNALS CAN BE USED TO DETERMINE THE USER'S BODY POSITION AND/OR LOCATION OF THE USER'S HEART
478
HAS A PREDETERMINED TIME ELAPSED OR HAS THE USER'S BODY POSITION CHANGED ?
NO
YES
480
SWITCH TO FIRST MODE MEASUREMENT ?
YES
NO

FIG. 4D-2

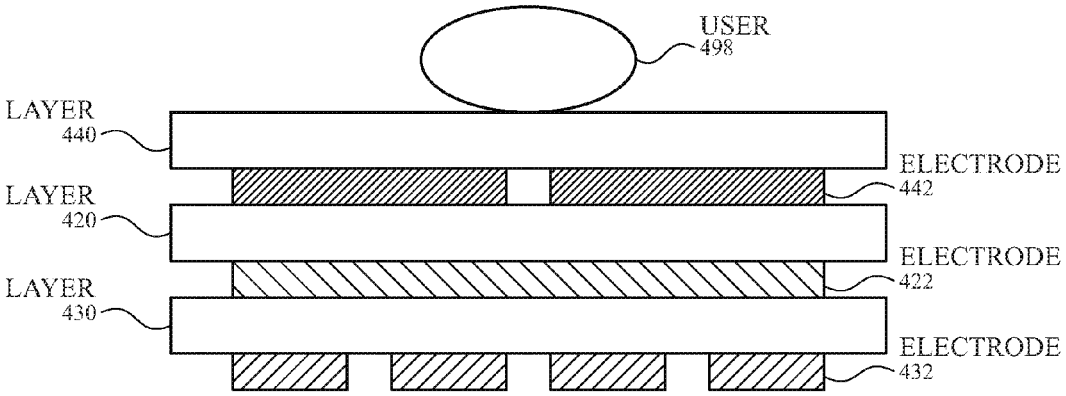
USER
498
LAYER
440
ELECTRODE
442
LAYER
420
ELECTRODE
422
LAYER
430
ELECTRODE
432

FIG. 4E

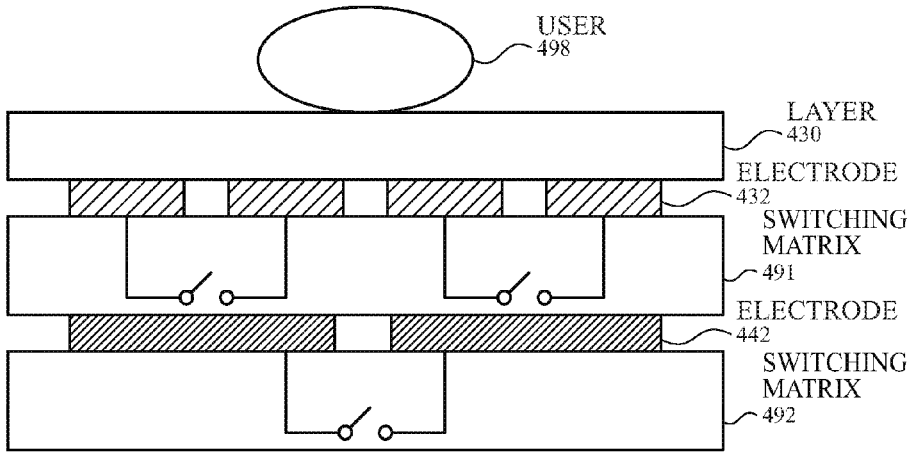
USER
498
LAYER
430
ELECTRODE
432
SWITCHING
MATRIX
491
ELECTRODE
442
SWITCHING
MATRIX
492

FIG. 4F

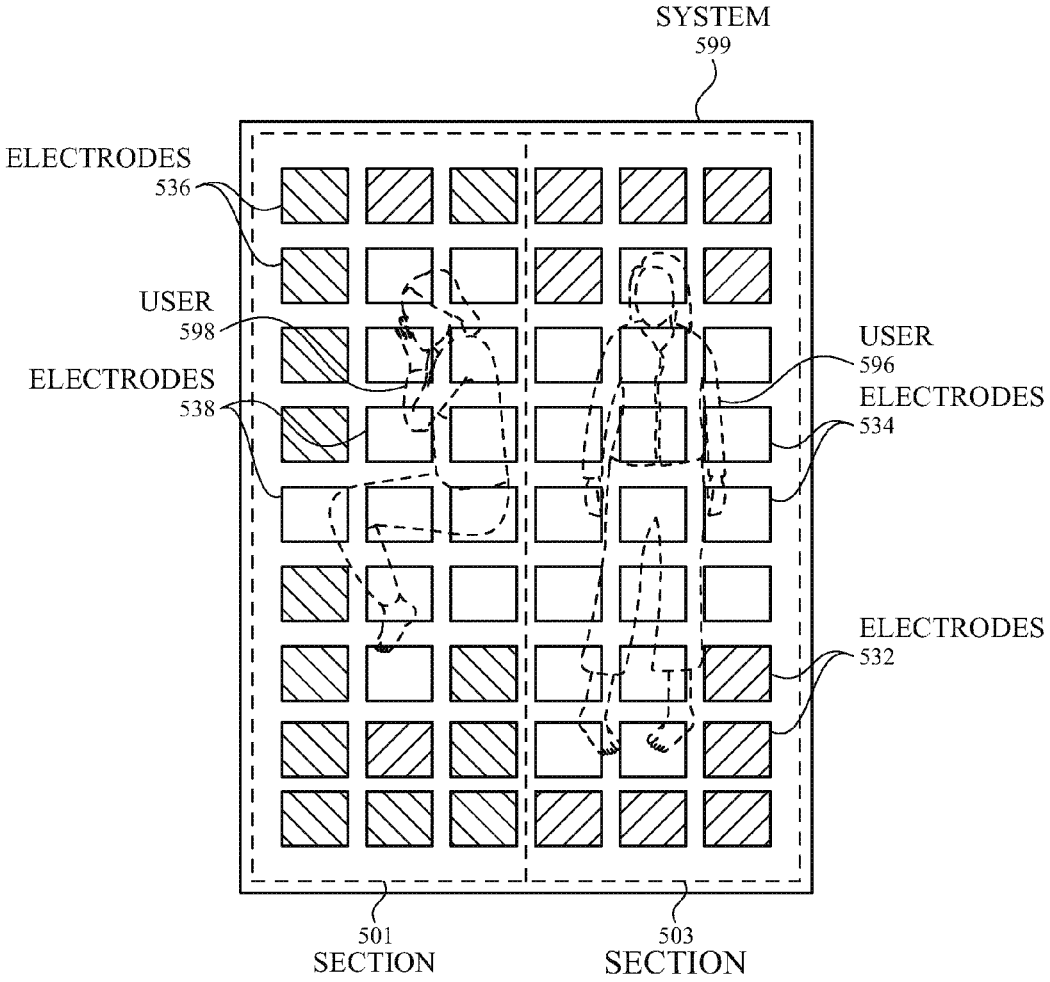
SYSTEM
599
ELECTRODES
536
USER
598
ELECTRODES
538
USER
596
ELECTRODES
534
ELECTRODES
532
501
SECTION
503
SECTION

FIG. 5A

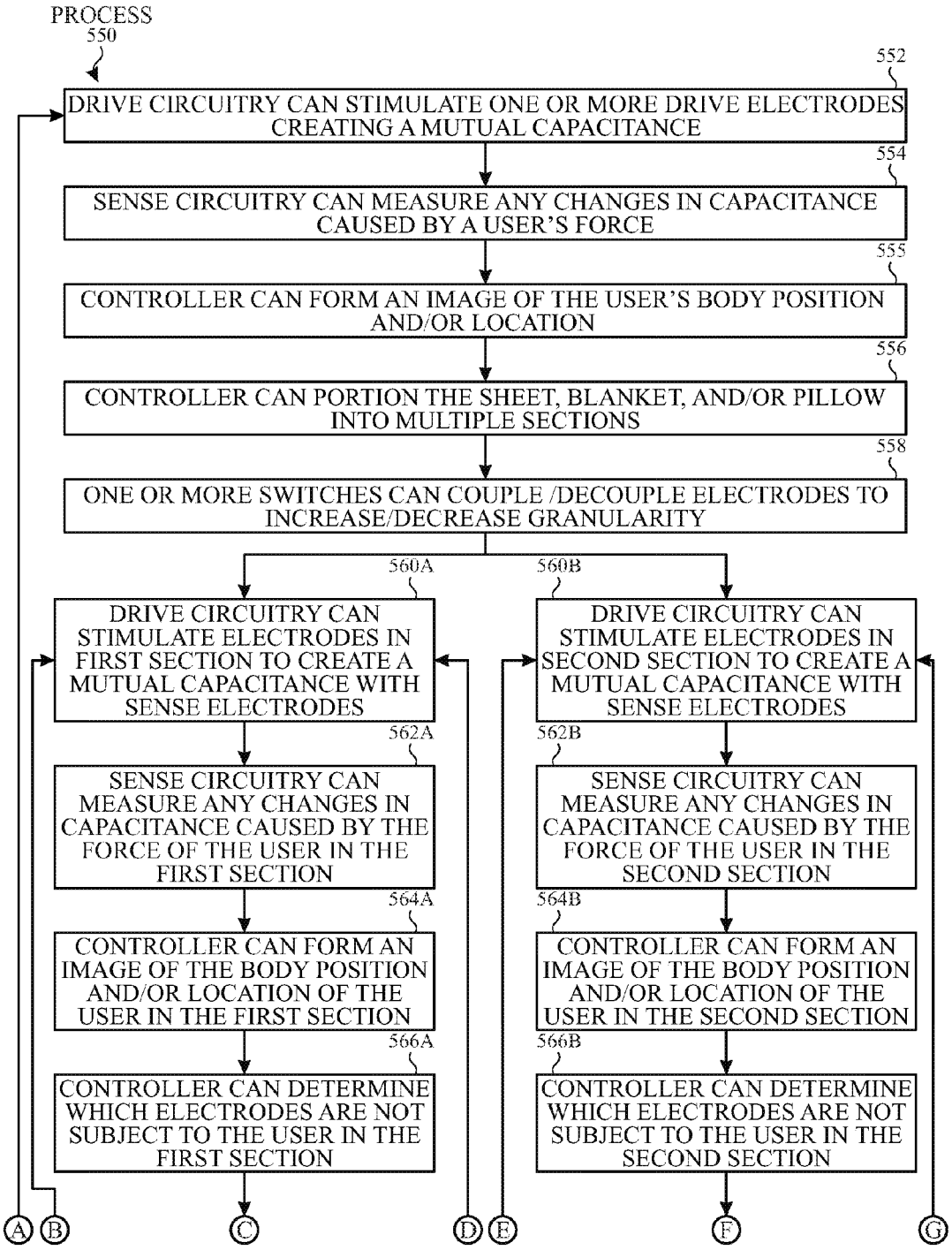
PROCESS
550
552
DRIVE CIRCUITRY CAN STIMULATE ONE OR MORE DRIVE ELECTRODES CREATING A MUTUAL CAPACITANCE
554
SENSE CIRCUITRY CAN MEASURE ANY CHANGES IN CAPACITANCE CAUSED BY A USER'S FORCE
555
CONTROLLER CAN FORM AN IMAGE OF THE USER'S BODY POSITION AND/OR LOCATION
556
CONTROLLER CAN PORTION THE SHEET, BLANKET, AND/OR PILLOW INTO MULTIPLE SECTIONS
558
ONE OR MORE SWITCHES CAN COUPLE /DECOUPLE ELECTRODES TO INCREASE/DECREASE GRANULARITY
560A
DRIVE CIRCUITRY CAN STIMULATE ELECTRODES IN FIRST SECTION TO CREATE A MUTUAL CAPACITANCE WITH SENSE ELECTRODES
562A
SENSE CIRCUITRY CAN MEASURE ANY CHANGES IN CAPACITANCE CAUSED BY THE FORCE OF THE USER IN THE FIRST SECTION
564A
CONTROLLER CAN FORM AN IMAGE OF THE BODY POSITION AND/OR LOCATION OF THE USER IN THE FIRST SECTION
566A
CONTROLLER CAN DETERMINE WHICH ELECTRODES ARE NOT SUBJECT TO THE USER IN THE FIRST SECTION
560B
DRIVE CIRCUITRY CAN STIMULATE ELECTRODES IN SECOND SECTION TO CREATE A MUTUAL CAPACITANCE WITH SENSE ELECTRODES
562B
SENSE CIRCUITRY CAN MEASURE ANY CHANGES IN CAPACITANCE CAUSED BY THE FORCE OF THE USER IN THE SECOND SECTION
564B
CONTROLLER CAN FORM AN IMAGE OF THE BODY POSITION AND/OR LOCATION OF THE USER IN THE SECOND SECTION
566B
CONTROLLER CAN DETERMINE WHICH ELECTRODES ARE NOT SUBJECT TO THE USER IN THE SECOND SECTION
A
B
C
D
E
F
G

FIG. 5B-1

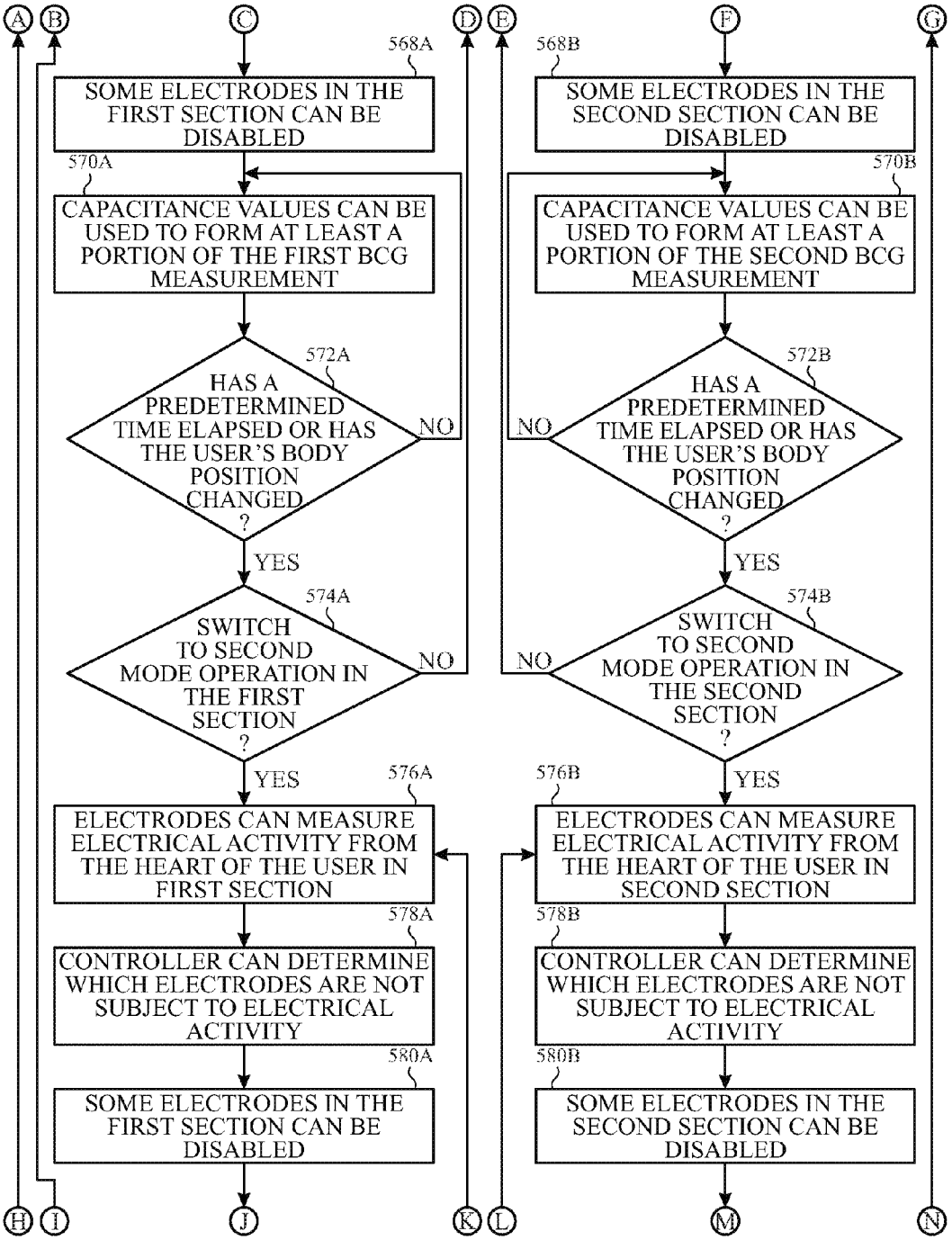
A
B
C
D
E
F
G
568A
SOME ELECTRODES IN THE FIRST SECTION CAN BE DISABLED
570A
CAPACITANCE VALUES CAN BE USED TO FORM AT LEAST A PORTION OF THE FIRST BCG MEASUREMENT
572A
HAS A PREDETERMINED TIME ELAPSED OR HAS THE USER'S BODY POSITION CHANGED ?
NO
YES
574A
SWITCH TO SECOND MODE OPERATION IN THE FIRST SECTION ?
NO
YES
576A
ELECTRODES CAN MEASURE ELECTRICAL ACTIVITY FROM THE HEART OF THE USER IN FIRST SECTION
578A
CONTROLLER CAN DETERMINE WHICH ELECTRODES ARE NOT SUBJECT TO ELECTRICAL ACTIVITY
580A
SOME ELECTRODES IN THE FIRST SECTION CAN BE DISABLED
568B
SOME ELECTRODES IN THE SECOND SECTION CAN BE DISABLED
570B
CAPACITANCE VALUES CAN BE USED TO FORM AT LEAST A PORTION OF THE SECOND BCG MEASUREMENT
572B
HAS A PREDETERMINED TIME ELAPSED OR HAS THE USER'S BODY POSITION CHANGED ?
NO
YES
574B
SWITCH TO SECOND MODE OPERATION IN THE SECOND SECTION ?
NO
YES
576B
ELECTRODES CAN MEASURE ELECTRICAL ACTIVITY FROM THE HEART OF THE USER IN SECOND SECTION
578B
CONTROLLER CAN DETERMINE WHICH ELECTRODES ARE NOT SUBJECT TO ELECTRICAL ACTIVITY
580B
SOME ELECTRODES IN THE SECOND SECTION CAN BE DISABLED
H
I
J
K
L
M
N

FIG. 5B-2

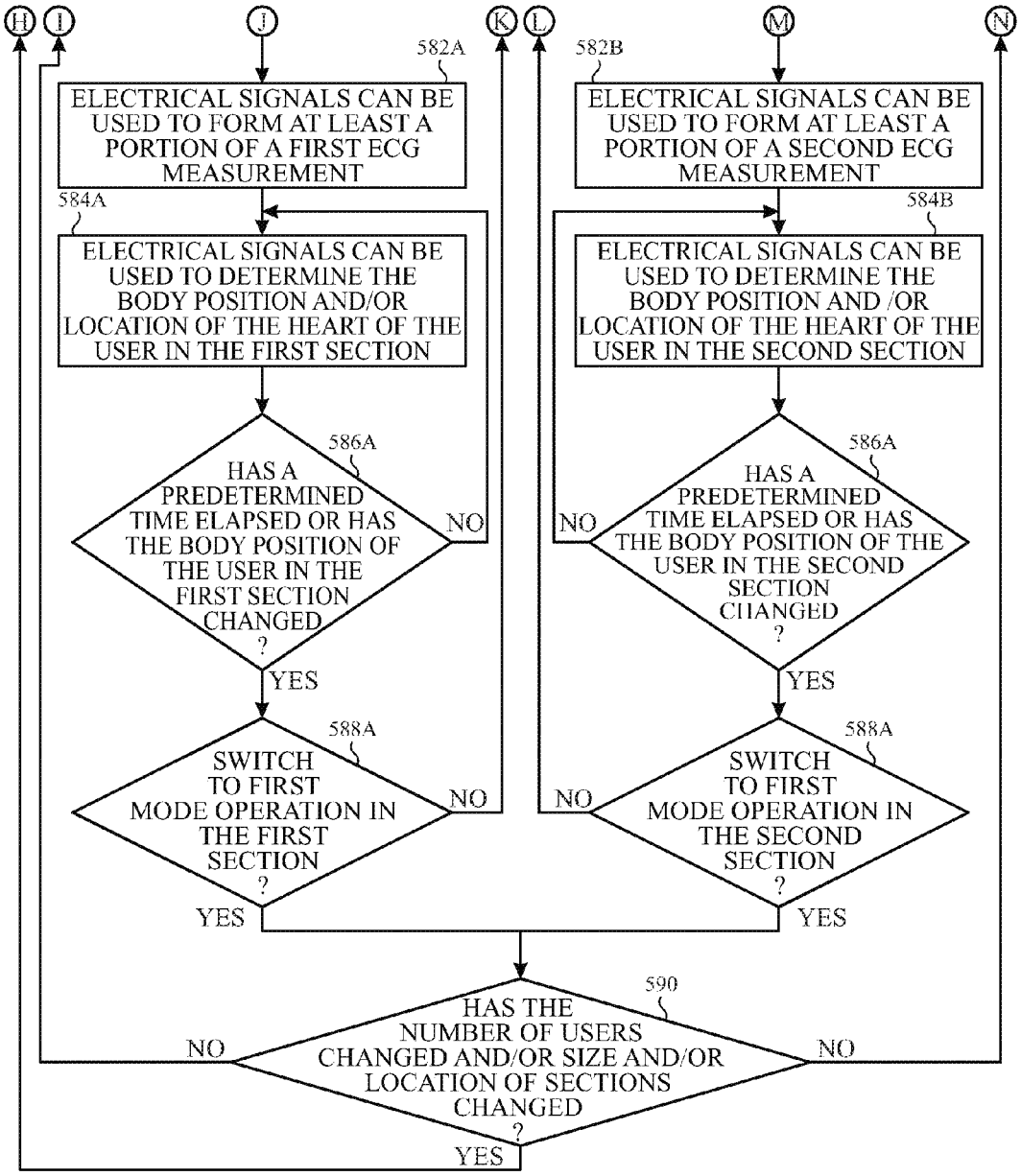
H
I
J
K
L
M
N
582A
ELECTRICAL SIGNALS CAN BE USED TO FORM AT LEAST A PORTION OF A FIRST ECG MEASUREMENT
582B
ELECTRICAL SIGNALS CAN BE USED TO FORM AT LEAST A PORTION OF A SECOND ECG MEASUREMENT
584A
ELECTRICAL SIGNALS CAN BE USED TO DETERMINE THE BODY POSITION AND/OR LOCATION OF THE HEART OF THE USER IN THE FIRST SECTION
584B
ELECTRICAL SIGNALS CAN BE USED TO DETERMINE THE BODY POSITION AND /OR LOCATION OF THE HEART OF THE USER IN THE SECOND SECTION
586A
HAS A PREDETERMINED TIME ELAPSED OR HAS THE BODY POSITION OF THE USER IN THE FIRST SECTION CHANGED ?
NO
YES
586A
HAS A PREDETERMINED TIME ELAPSED OR HAS THE BODY POSITION OF THE USER IN THE SECOND SECTION CHANGED ?
NO
YES
588A
SWITCH TO FIRST MODE OPERATION IN THE FIRST SECTION ?
NO
YES
588A
SWITCH TO FIRST MODE OPERATION IN THE SECOND SECTION ?
NO
YES
590
HAS THE NUMBER OF USERS CHANGED AND/OR SIZE AND/OR LOCATION OF SECTIONS CHANGED ?
NO
NO
YES

FIG. 5B-3

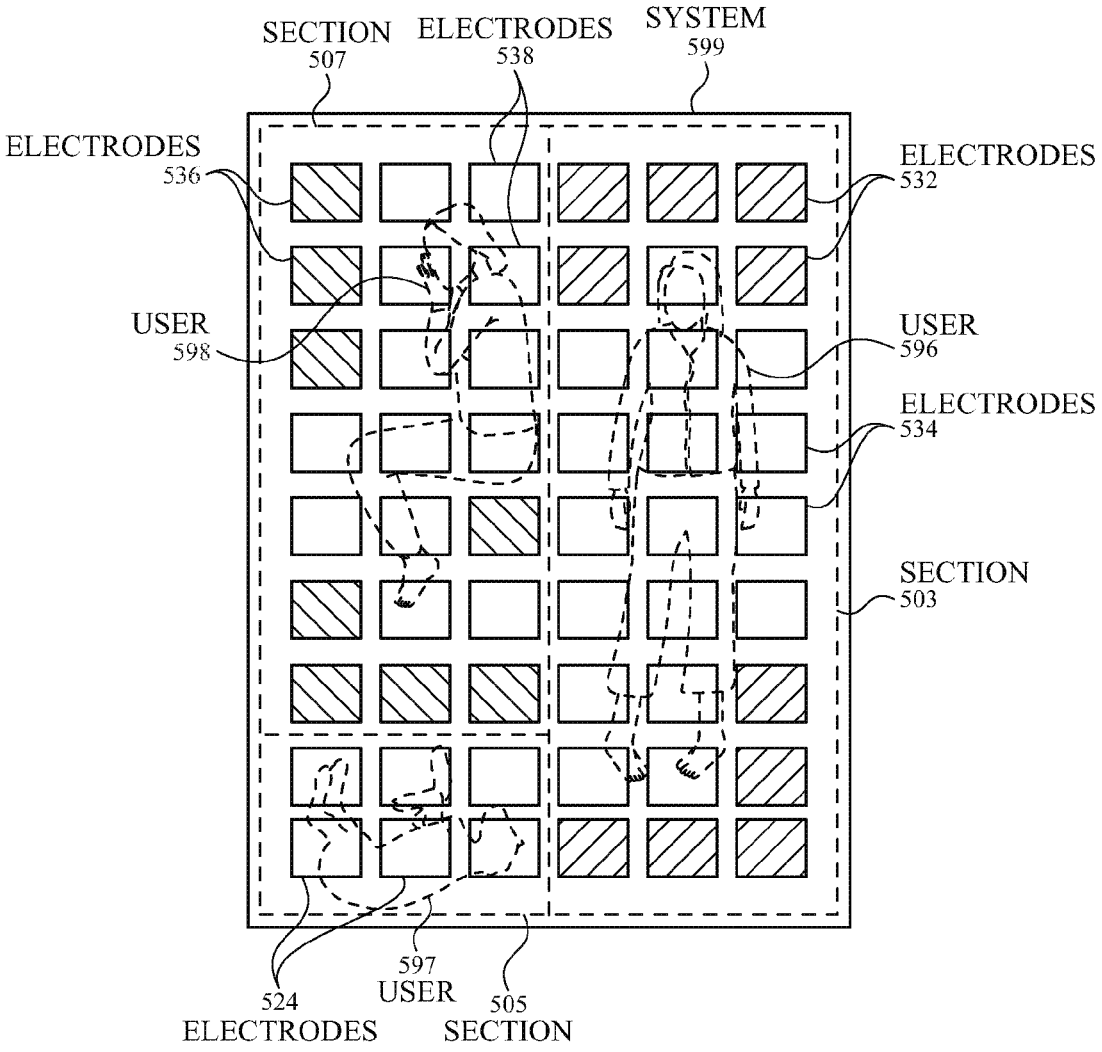
SECTION
507
ELECTRODES
538
SYSTEM
599
ELECTRODES
536
ELECTRODES
532
USER
598
USER
596
ELECTRODES
534
SECTION
503
524
ELECTRODES
597
USER
505
SECTION

FIG. 5C

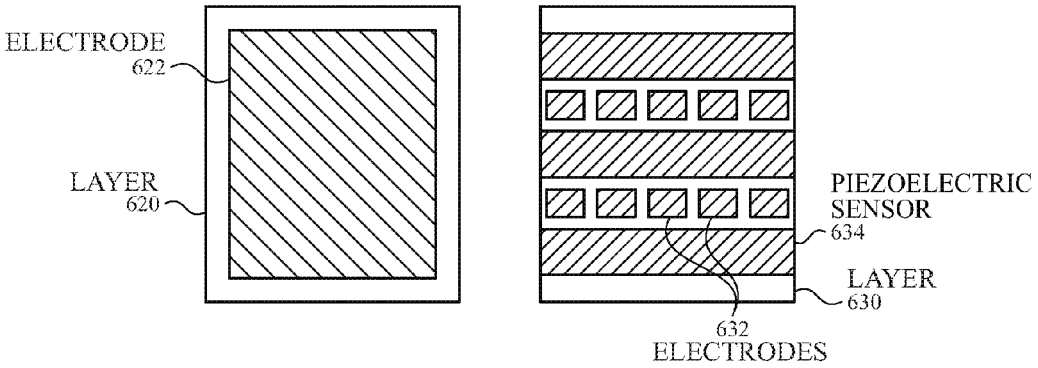
ELECTRODE
622
LAYER
620
PIEZOELECTRIC
SENSOR
634
LAYER
630
632
ELECTRODES

FIG. 6A

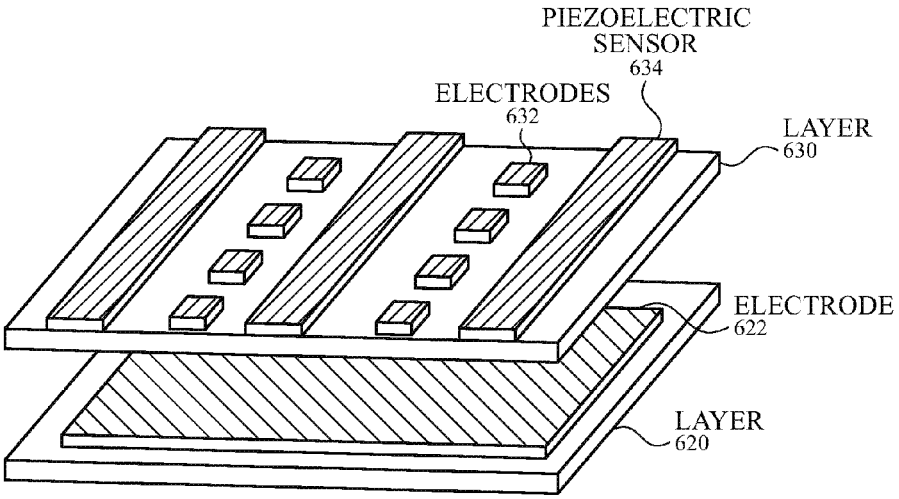
PIEZOELECTRIC
SENSOR
634
ELECTRODES
632
LAYER
630
ELECTRODE
622
LAYER
620

FIG. 6B

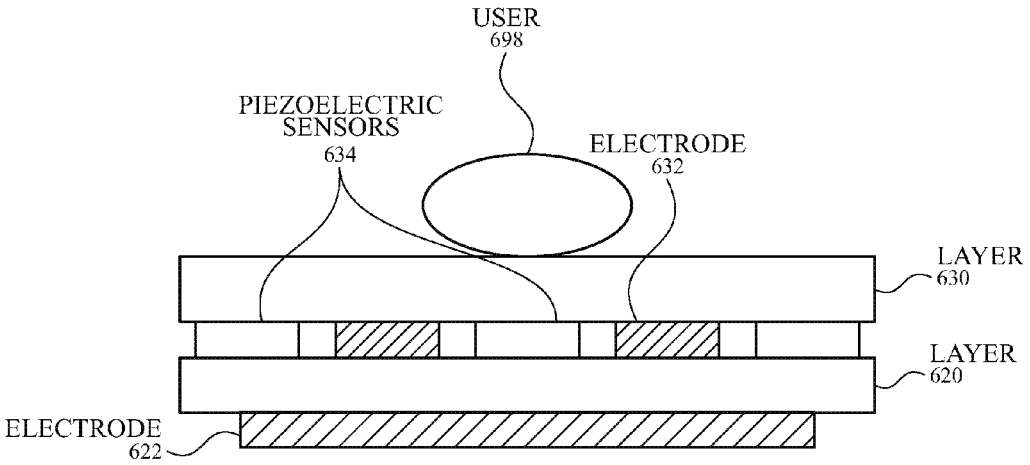
USER
698
PIEZOELECTRIC
SENSORS
634
ELECTRODE
632
LAYER
630
LAYER
620
ELECTRODE
622

FIG. 6C

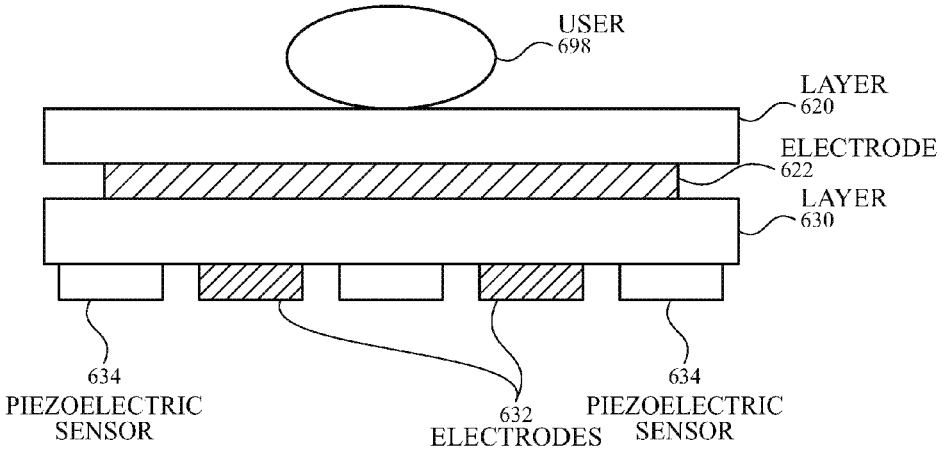
USER
698
LAYER
620
ELECTRODE
622
LAYER
630
634
PIEZOELECTRIC
SENSOR
632
ELECTRODES
634
PIEZOELECTRIC
SENSOR

FIG. 6D

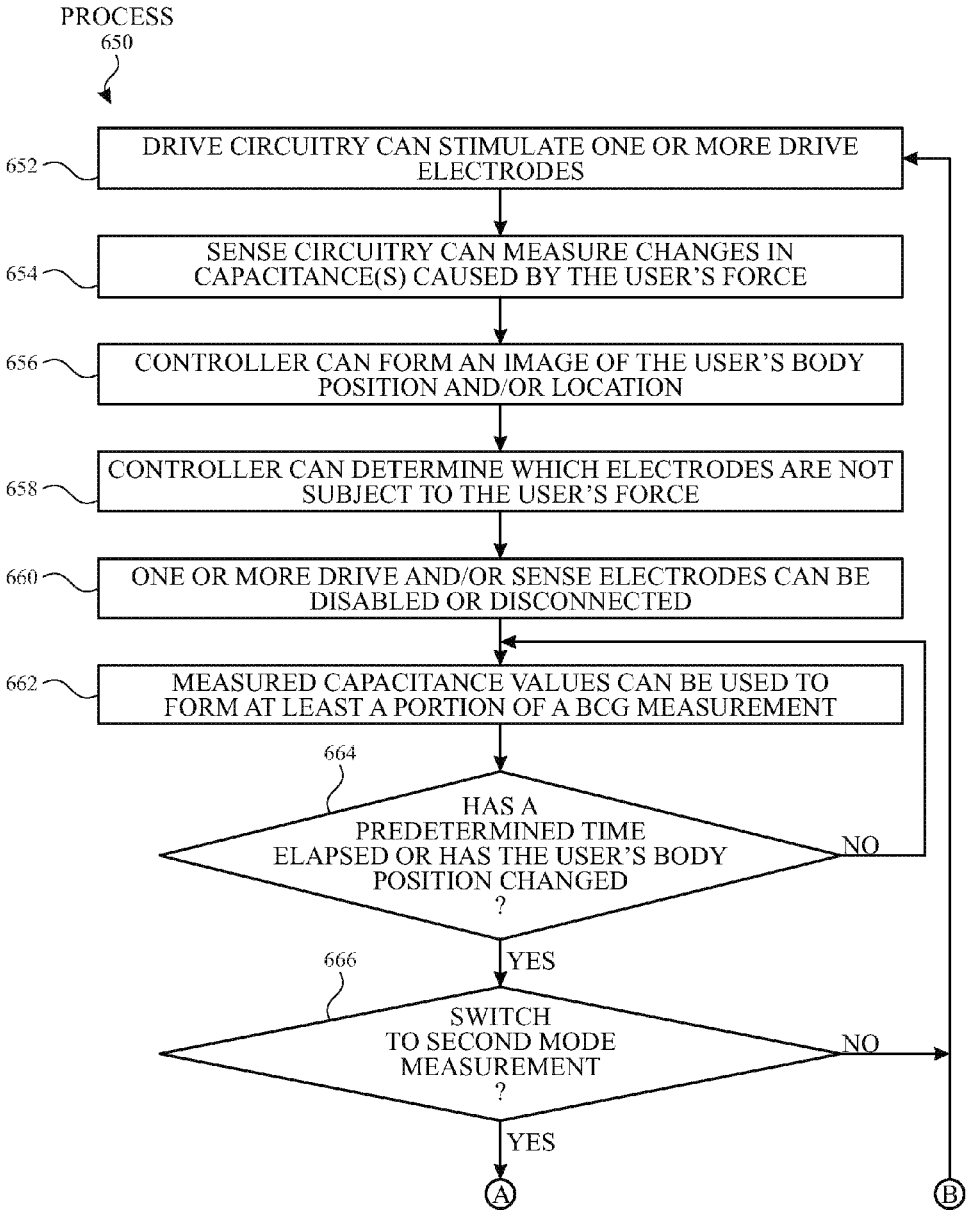
PROCESS
650
652
DRIVE CIRCUITRY CAN STIMULATE ONE OR MORE DRIVE ELECTRODES
654
SENSE CIRCUITRY CAN MEASURE CHANGES IN CAPACITANCE(S) CAUSED BY THE USER'S FORCE
656
CONTROLLER CAN FORM AN IMAGE OF THE USER'S BODY POSITION AND/OR LOCATION
658
CONTROLLER CAN DETERMINE WHICH ELECTRODES ARE NOT SUBJECT TO THE USER'S FORCE
660
ONE OR MORE DRIVE AND/OR SENSE ELECTRODES CAN BE DISABLED OR DISCONNECTED
662
MEASURED CAPACITANCE VALUES CAN BE USED TO FORM AT LEAST A PORTION OF A BCG MEASUREMENT
664
HAS A PREDETERMINED TIME ELAPSED OR HAS THE USER'S BODY POSITION CHANGED ?
NO
YES
666
SWITCH TO SECOND MODE MEASUREMENT ?
NO
YES
A
B

FIG. 6E-1

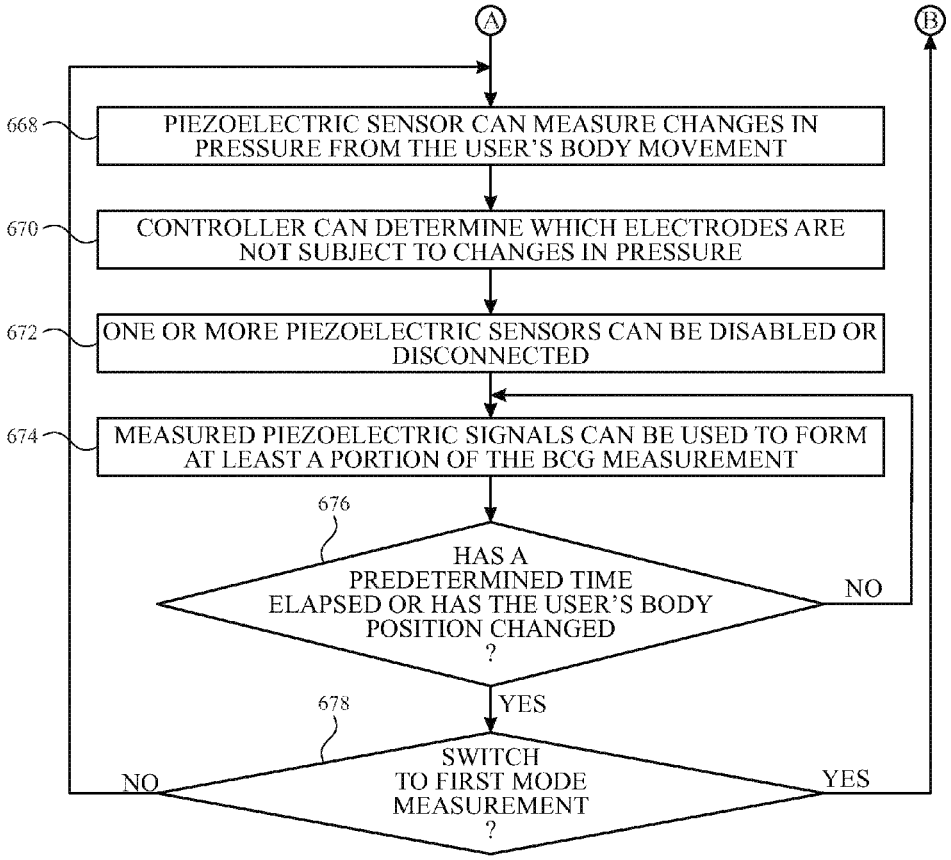
A
B
668
PIEZOELECTRIC SENSOR CAN MEASURE CHANGES IN PRESSURE FROM THE USER'S BODY MOVEMENT
670
CONTROLLER CAN DETERMINE WHICH ELECTRODES ARE NOT SUBJECT TO CHANGES IN PRESSURE
672
ONE OR MORE PIEZOELECTRIC SENSORS CAN BE DISABLED OR DISCONNECTED
674
MEASURED PIEZOELECTRIC SIGNALS CAN BE USED TO FORM AT LEAST A PORTION OF THE BCG MEASUREMENT
676
HAS A PREDETERMINED TIME ELAPSED OR HAS THE USER'S BODY POSITION CHANGED ?
NO
YES
678
SWITCH TO FIRST MODE MEASUREMENT ?
NO
YES

FIG. 6E-2

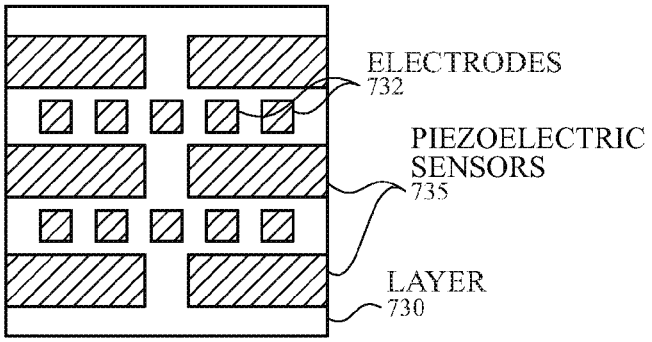

FIG. 7A

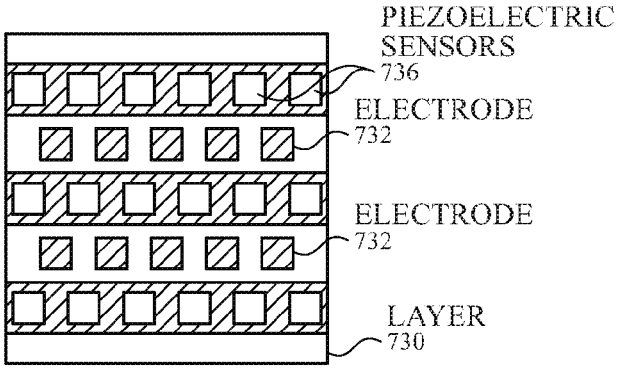

FIG. 7B

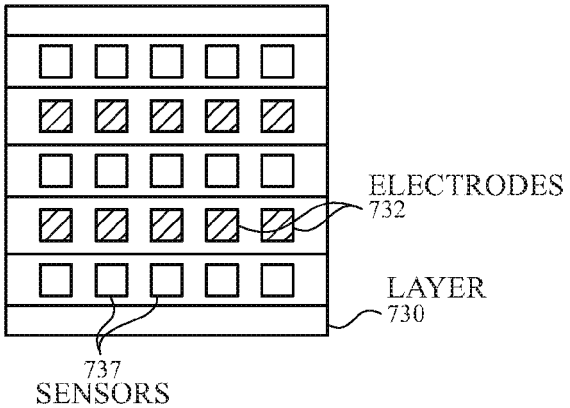

FIG. 7C

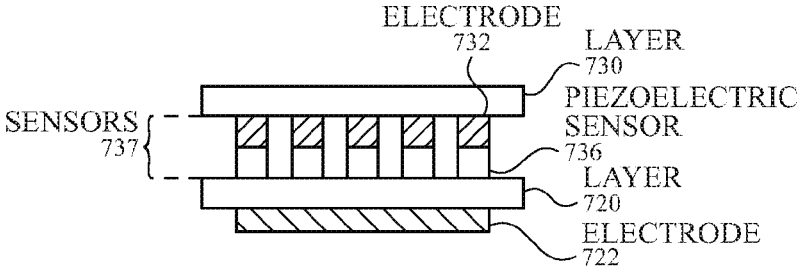

FIG. 7D

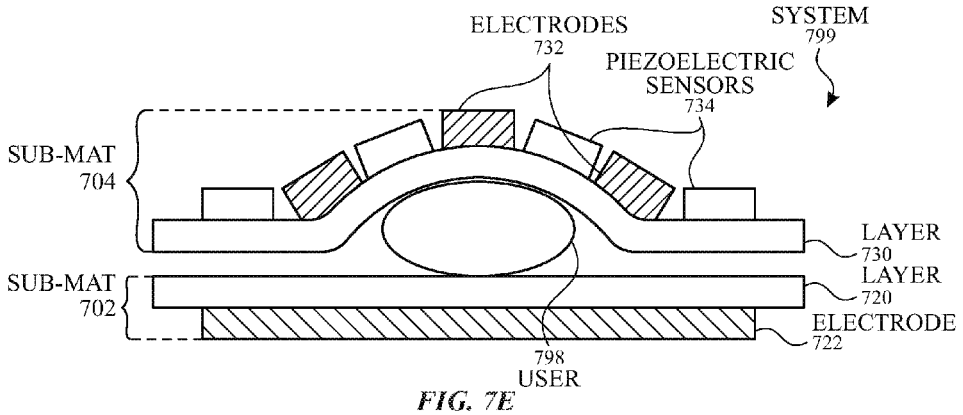

FIG. 7E

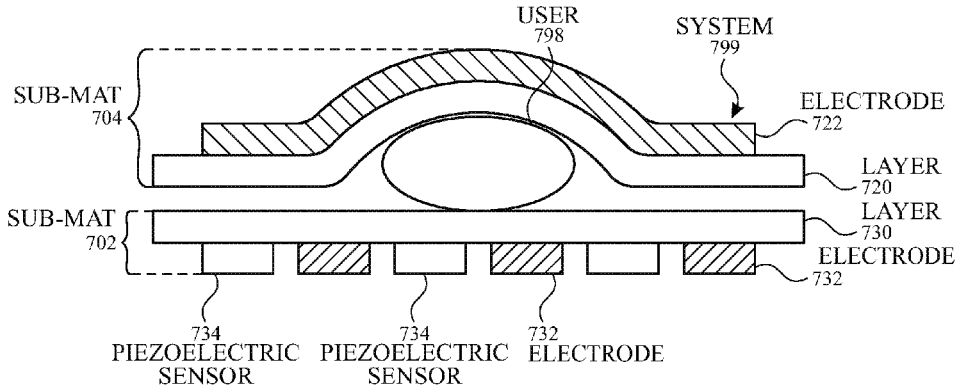

FIG. 7F

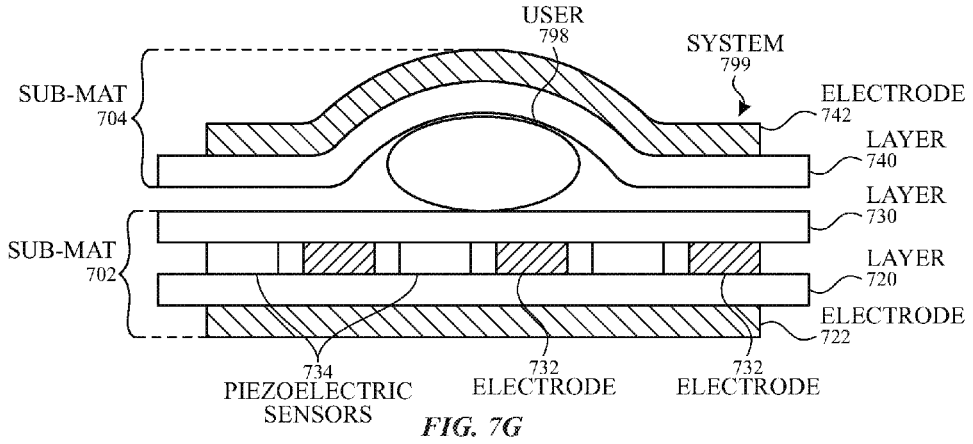

FIG. 7G

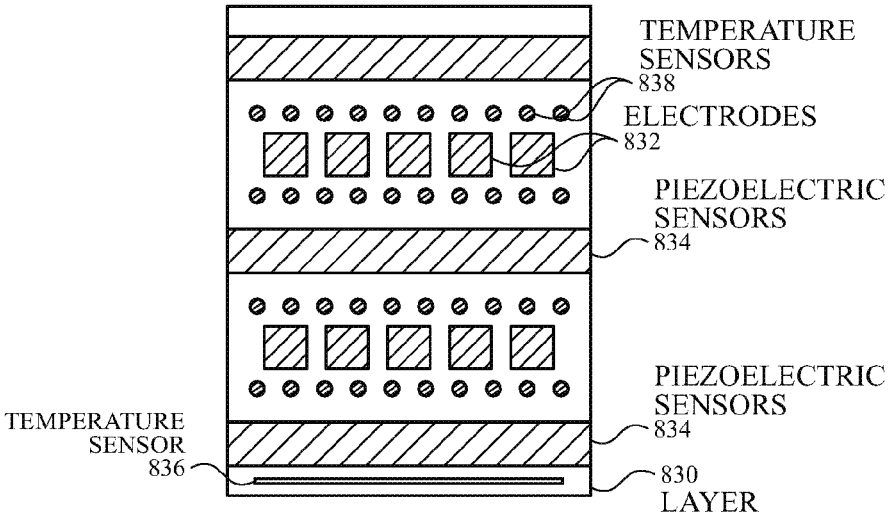
TEMPERATURE SENSORS
838
ELECTRODES
832
PIEZOELECTRIC SENSORS
834
PIEZOELECTRIC SENSORS
834
TEMPERATURE SENSOR
836
830
LAYER

FIG. 8A

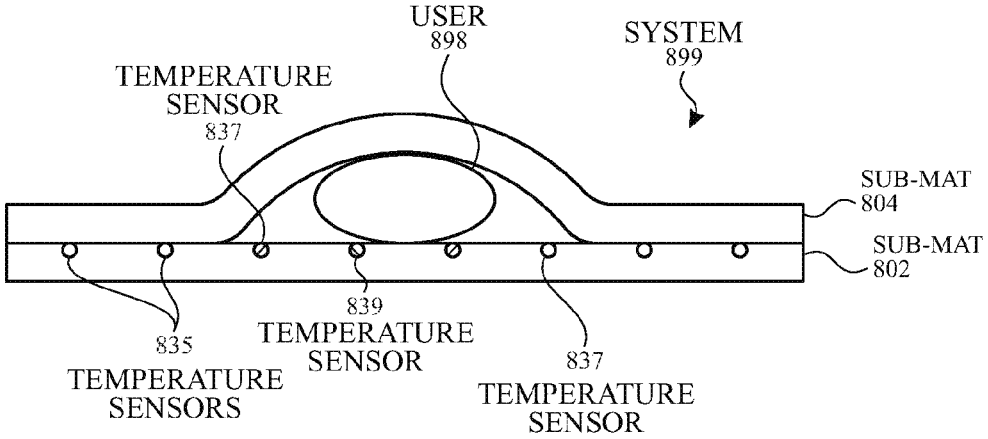
USER
898
SYSTEM
899
TEMPERATURE SENSOR
837
SUB-MAT
804
SUB-MAT
802
839
TEMPERATURE SENSOR
835
TEMPERATURE SENSORS
837
TEMPERATURE SENSOR

FIG. 8B

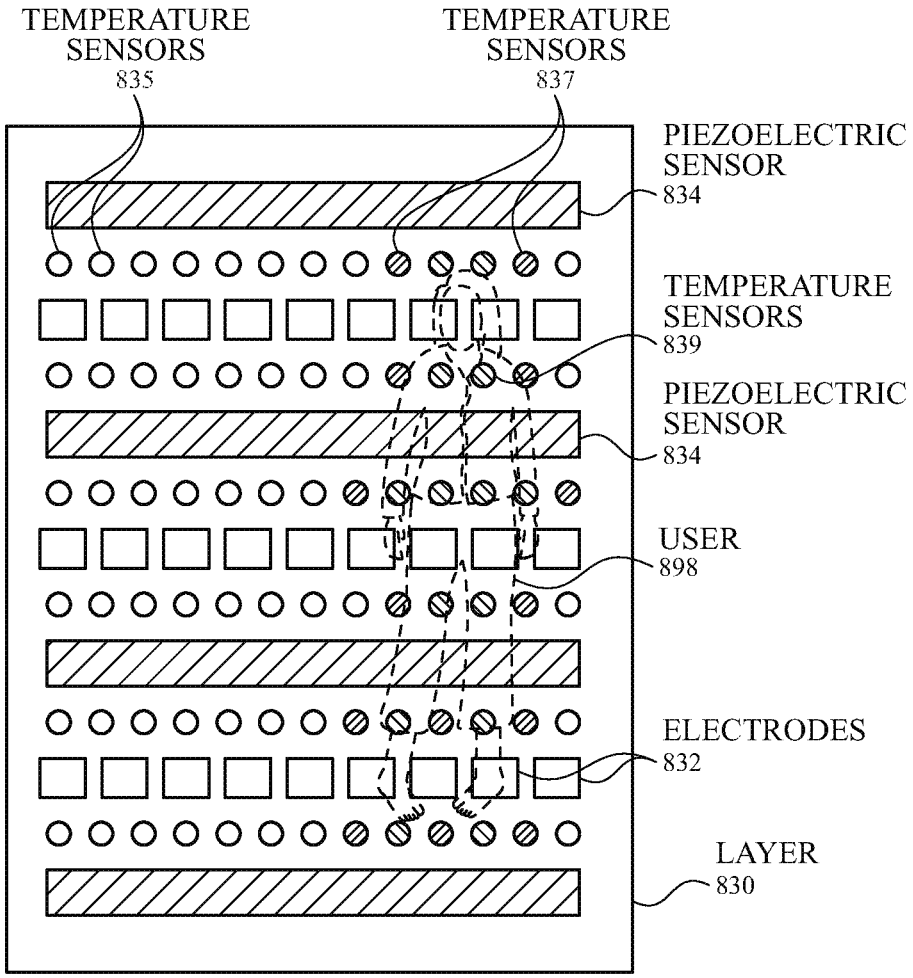
TEMPERATURE SENSORS 835
TEMPERATURE SENSORS 837
PIEZOELECTRIC SENSOR 834
TEMPERATURE SENSORS 839
PIEZOELECTRIC SENSOR 834
USER 898
ELECTRODES 832
LAYER 830

FIG. 8C

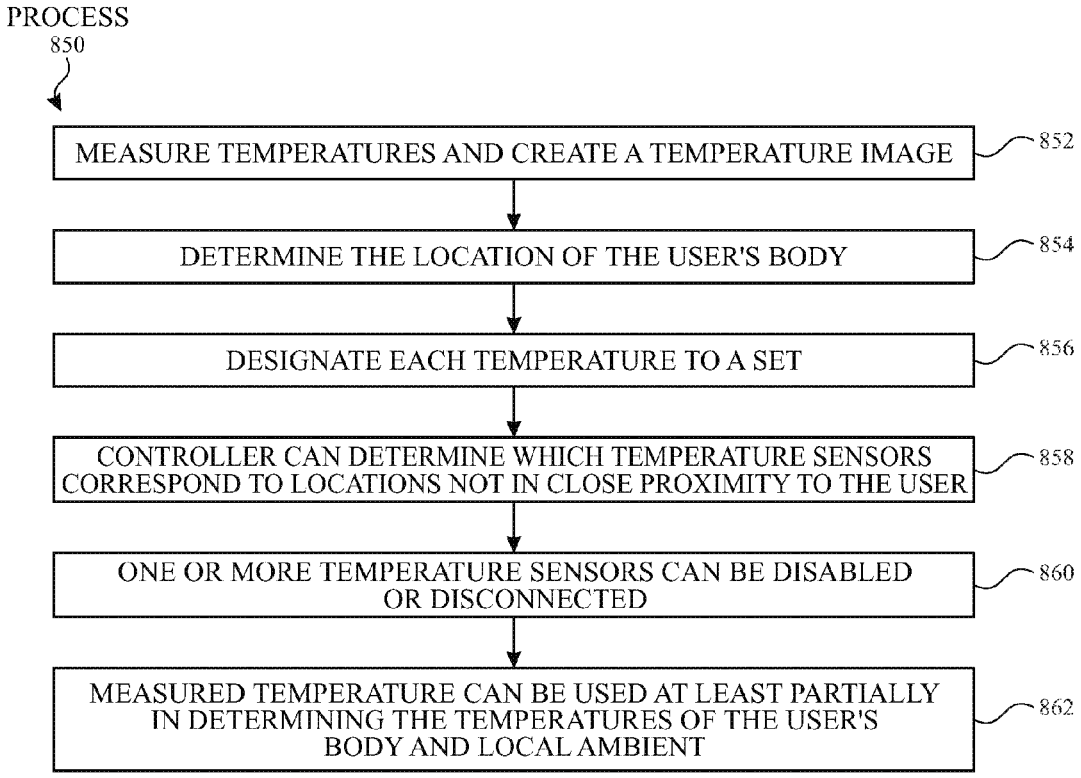
PROCESS
850
MEASURE TEMPERATURES AND CREATE A TEMPERATURE IMAGE
852
DETERMINE THE LOCATION OF THE USER'S BODY
854
DESIGNATE EACH TEMPERATURE TO A SET
856
CONTROLLER CAN DETERMINE WHICH TEMPERATURE SENSORS CORRESPOND TO LOCATIONS NOT IN CLOSE PROXIMITY TO THE USER
858
ONE OR MORE TEMPERATURE SENSORS CAN BE DISABLED OR DISCONNECTED
860
MEASURED TEMPERATURE CAN BE USED AT LEAST PARTIALLY IN DETERMINING THE TEMPERATURES OF THE USER'S BODY AND LOCAL AMBIENT
862

FIG. 8D

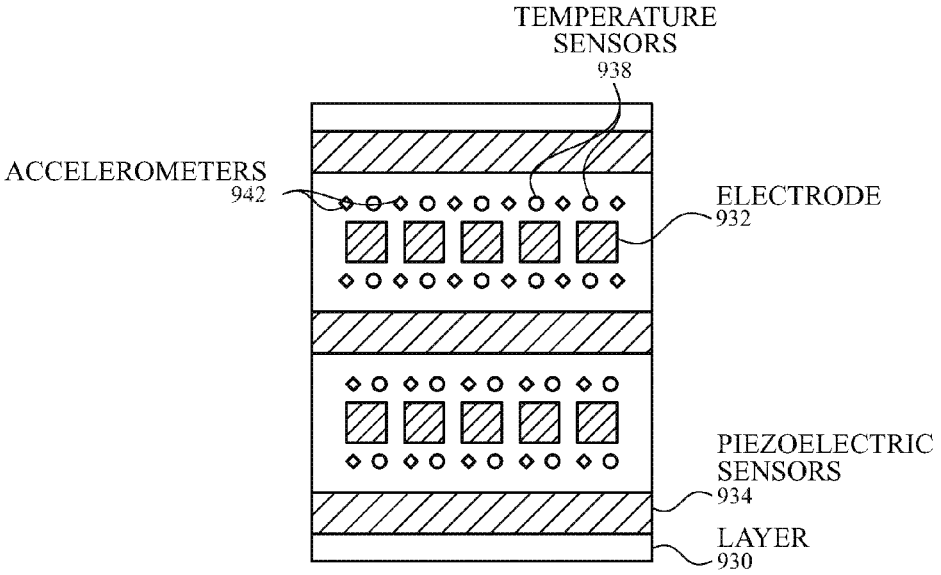
TEMPERATURE SENSORS
938
ACCELEROMETERS
942
ELECTRODE
932
PIEZOELECTRIC SENSORS
934
LAYER
930

FIG. 9

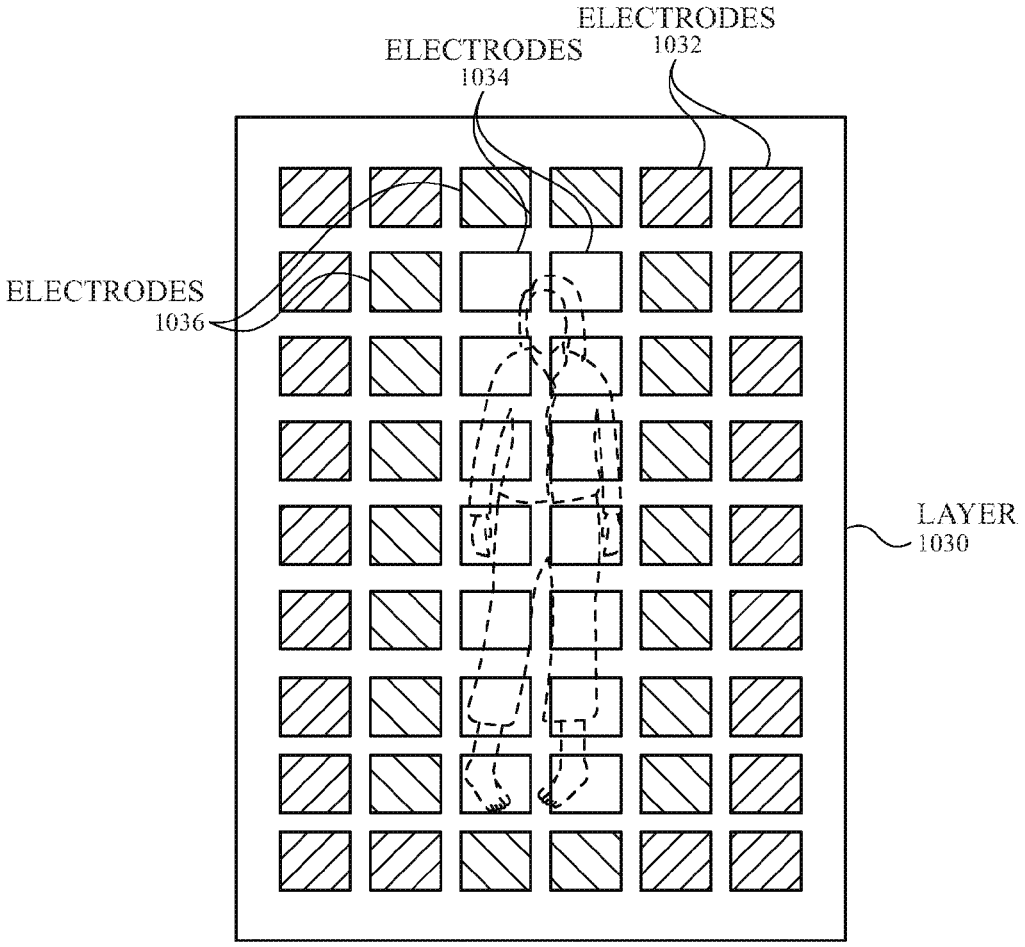
ELECTRODES
1032
ELECTRODES
1034
ELECTRODES
1036
LAYER
1030

FIG. 10A

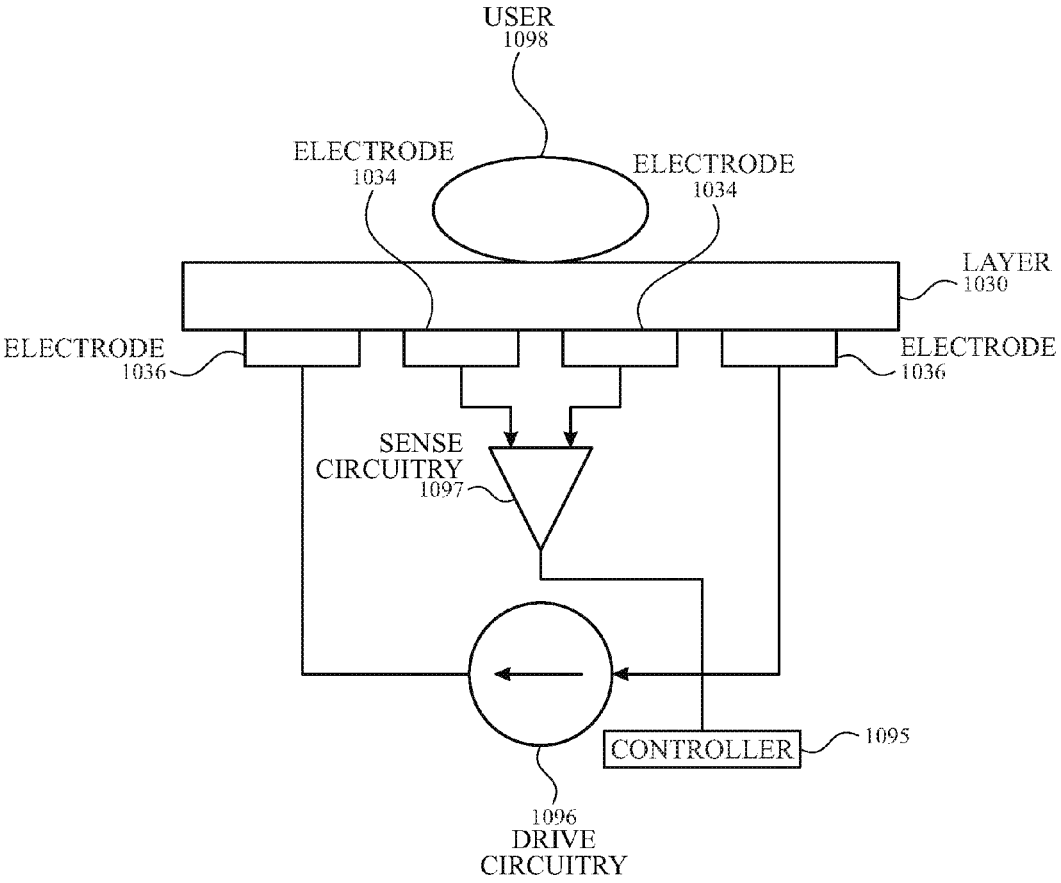
USER
1098
ELECTRODE
1034
ELECTRODE
1034
LAYER
1030
ELECTRODE
1036
ELECTRODE
1036
SENSE
CIRCUITRY
1097
CONTROLLER
1095
1096
DRIVE
CIRCUITRY

FIG. 10B

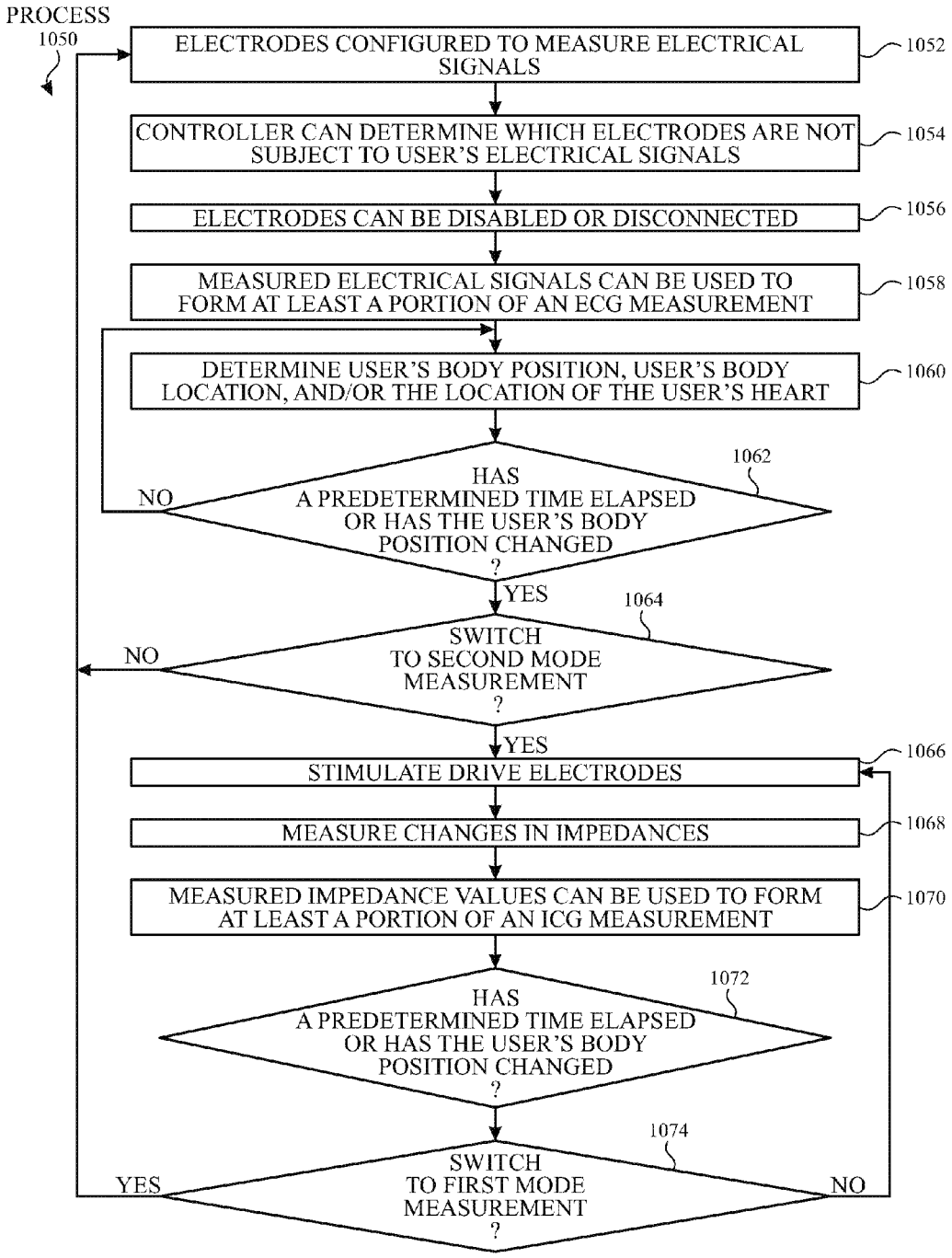
PROCESS
1050
ELECTRODES CONFIGURED TO MEASURE ELECTRICAL SIGNALS
1052
CONTROLLER CAN DETERMINE WHICH ELECTRODES ARE NOT SUBJECT TO USER'S ELECTRICAL SIGNALS
1054
ELECTRODES CAN BE DISABLED OR DISCONNECTED
1056
MEASURED ELECTRICAL SIGNALS CAN BE USED TO FORM AT LEAST A PORTION OF AN ECG MEASUREMENT
1058
DETERMINE USER'S BODY POSITION, USER'S BODY LOCATION, AND/OR THE LOCATION OF THE USER'S HEART
1060
HAS A PREDETERMINED TIME ELAPSED OR HAS THE USER'S BODY POSITION CHANGED ?
1062
NO
YES
SWITCH TO SECOND MODE MEASUREMENT ?
1064
NO
YES
STIMULATE DRIVE ELECTRODES
1066
MEASURE CHANGES IN IMPEDANCES
1068
MEASURED IMPEDANCE VALUES CAN BE USED TO FORM AT LEAST A PORTION OF AN ICG MEASUREMENT
1070
HAS A PREDETERMINED TIME ELAPSED OR HAS THE USER'S BODY POSITION CHANGED ?
1072
SWITCH TO FIRST MODE MEASUREMENT ?
1074
YES
NO

FIG. 10C

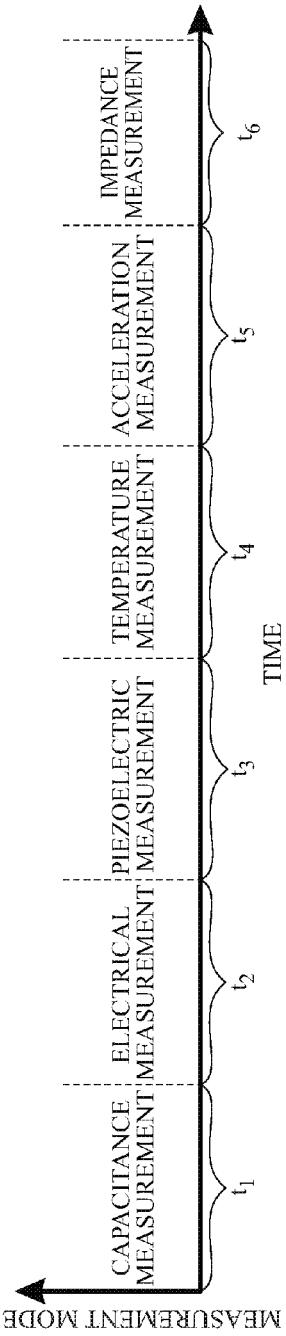

FIG. 11A

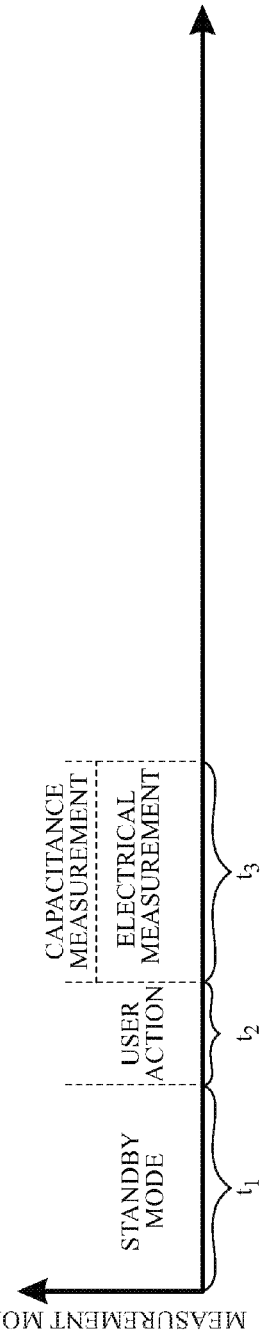

FIG. 11B

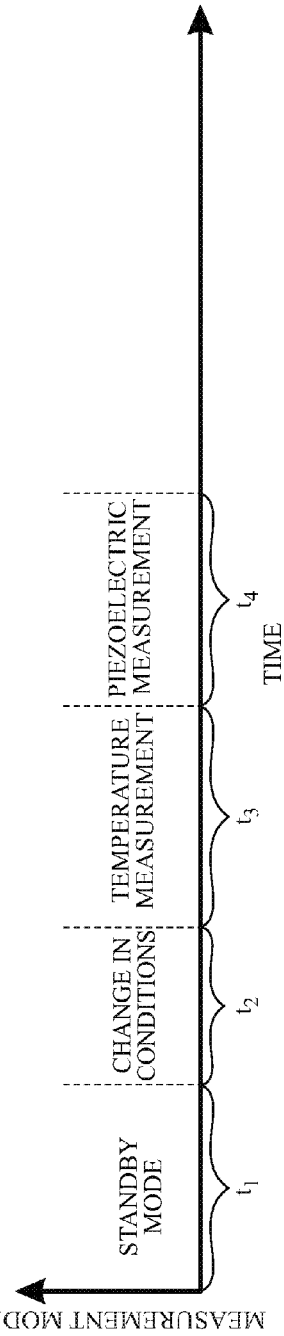

FIG. 11C

VITAL SIGNS MONITORING SYSTEM

CROSS-REFERENCE TO RELATED APPLICATIONS

[0001] This application claims priority to U.S. Provisional Patent Application Ser. No. 62/374,615, filed Aug. 12, 2016, which is hereby incorporated by reference in its entirety.

FIELD

[0002] This relates generally to monitoring systems and methods for measuring vital signs of one or more users.

BACKGROUND

[0003] Traditionally, monitoring a person's sleep or vital signs has required expensive and bulky equipment. Some systems require that the monitoring be performed away from home in a medical facility and/or require the equipment to attach to or directly contact the person, which can lead to discomfort and can lead to inaccurate analysis due to disruption of the person's sleep. Furthermore, these systems are configured to determine the vital signs based on one type of measurement or mode of operation. Moreover, these systems are configured for monitoring only a single person; these systems lack the capability of not only monitoring multiple users, but also incorporating the analysis of a first user into the analysis of a second user, whose sleep may be affected by the first user.

SUMMARY

[0004] This relates to a monitoring system capable of measuring a plurality of vital signs for one or more users. The monitoring system can include a plurality of sensors including, but not limited to, electrodes, piezoelectric sensors, temperature sensors, and accelerometers. The monitoring system can be capable of operating in one or more operation modes such as, for example: capacitance measurement mode, electrical measurement mode, piezoelectric measurement mode, temperature measurement mode, acceleration measurement mode, impedance measurement mode, and standby mode. Based on the measured values, the monitoring system can perform functions such as analyze the user's sleep, provide feedback and suggestions to the user, and/or can adjust or control the environmental conditions to improve the user's sleep. The monitoring system can be further capable of dynamically partitioning the system into multiple sections to account for multiple users. Each section can be tailored to the corresponding user with independent control and independent measurements to provide separate sleep analysis unique to the user. The monitoring system can utilize the information from one user in its assessment of the sleep of another user. The monitoring system can be utilized at home or can be portable, giving the user flexibility with locations where the monitoring system can be used. The monitoring system can further be capable of analyzing the sleep of the user(s) without directly contacting or attaching uncomfortable probes to the user(s) and without having to analyze the sleep in an unknown environment (e.g., a medical facility).

BRIEF DESCRIPTION OF THE DRAWINGS

[0005] FIG. **1** illustrates an exemplary block diagram of the monitoring system according to examples of the disclosure.

[0006] FIGS. **2**A-**2**B illustrate top and perspective views of layers included in an exemplary mat according to examples of the disclosure.

[0007] FIGS. **2**C-**2**F illustrate cross-sectional views of an exemplary mat according to examples of the disclosure.

[0008] FIG. **2**G illustrates an exemplary process flow for capacitive measurements according to examples of the disclosure.

[0009] FIG. **2**H illustrates an exemplary perspective view of layers included in an exemplary mat according to examples of the disclosure.

[0010] FIG. **3**A illustrates a cross-sectional view of an exemplary monitoring system including a mat according to examples of the disclosure.

[0011] FIGS. **3**B-**3**C illustrate cross-sectional views of exemplary mats according to examples of the disclosure.

[0012] FIGS. **3**D-**1** and **3**D-**2** illustrate an exemplary process flow for dynamically switching one or more electrodes utilized for capacitance measurements according to examples of the disclosure.

[0013] FIG. **3**E illustrates a cross-sectional view of an exemplary mat including a switching matrix according to examples of the disclosure.

[0014] FIGS. **4**A-**4**C illustrate top, perspective, and cross-sectional views of layers included in an exemplary mat according to examples of the disclosure.

[0015] FIGS. **4**D-**1** and **4**D-**2** illustrate an exemplary process flow for capacitive and electrical measurements according to examples of the disclosure.

[0016] FIG. **4**E illustrates a cross-sectional view of an exemplary mat according to examples of the disclosure.

[0017] FIG. **4**F illustrates a cross-sectional view of an exemplary mat according to examples of the disclosure.

[0018] FIG. **5**A illustrates a top view of an exemplary monitoring system including multiple sections according to examples of the disclosure.

[0019] FIGS. **5**B-**1** to **5**B-**3** illustrate an exemplary process flow for dynamically partitioning the mat into multiple sections according to examples of the disclosure.

[0020] FIG. **5**C illustrates a top view of an exemplary monitoring system including multiple sections according to examples of the disclosure.

[0021] FIGS. **6**A-**6**B illustrate top and perspective views of layers included in an exemplary mat according to examples of the disclosure.

[0022] FIGS. **6**C-**6**D illustrate cross-sectional views of an exemplary mat according to examples of the disclosure.

[0023] FIGS. **6**E-**1** and **6**E-**2** illustrate an exemplary process flow for capacitive, electrical, and piezoelectric measurements according to examples of the disclosure.

[0024] FIGS. **7**A-**7**B illustrate top views of exemplary layers included in a mat according to examples of the disclosure.

[0025] FIGS. **7**C-**7**D illustrate top and cross-sectional views of an exemplary mat including electrodes disposed on piezoelectric sensors according to examples of the disclosure.

[0026] FIGS. **7**E-**7**G illustrate cross-sectional views of exemplary mats according to examples of the disclosure.

[0027] FIG. **8**A illustrates a top view of an exemplary layer of a mat including a plurality of electrodes, a plurality of piezoelectric sensors, and a plurality of temperature sensors according to examples of the disclosure.

[0028] FIGS. **8**B-**8**C illustrate cross-sectional and top views of the monitoring system including temperature sensors according to examples of the disclosure.

[0029] FIG. **8**D illustrates an exemplary process flow for temperature measurements according to examples of the disclosure.

[0030] FIG. **9** illustrates a top view of an exemplary layer of a mat including a plurality of electrodes, a plurality of piezoelectric sensors, a plurality of temperature sensors, and a plurality of accelerometers according to examples of the disclosure.

[0031] FIG. **10**A illustrates a top view of an exemplary layer included in a mat configured for ICG measurements according to examples of the disclosure.

[0032] FIG. **10**B illustrates a corresponding circuit diagram according to examples of the disclosure.

[0033] FIG. **10**C illustrates an exemplary process flow configured for impedance measurement according to examples of the disclosure.

[0034] FIGS. **11**A-**11**C illustrate measurement modes over time for a monitoring system according to examples of the disclosure.

DETAILED DESCRIPTION

[0035] In the following description of examples, reference is made to the accompanying drawings in which it is shown by way of illustration specific examples that can be practiced. It is to be understood that other examples can be used and structural changes can be made without departing from the scope of the various examples.

[0036] FIG. **1** illustrates an exemplary block diagram of the monitoring system according to examples of the disclosure. System **199** can include mat **102**, power source **103**, camera **108**, and control system **140**. Mat **102** can be resting on, attached to, or in contact with a bed (not shown) or any type of apparatus configured to support one or more human users, one or more pets, or the like. Mat **102** can be configured to cover all or a portion of a mattress, for example, that can be resting, attached to, or supported by one or more frames of the bed. In some examples, mat **102** can be flexible. In some examples, mat **102** can be at least partially rigid. Mat **102** can include one or more of a sheet, blanket, duvet, pillow or pillowcase, or insert. Mat **102** can be a stand-alone unit that can be placed on a bed or can be incorporated into the fabric or textile used as part of a sleeping/resting arrangement.

[0037] Power source **102** can be configured to provide power to system **199**. In some examples, the power source can be configured to couple to a power outlet. In some examples, the power source can be coupled to a battery and a charging station or power supply. In some examples, the power source can be configured to receive power from a charging element, such as a magnetic puck. In some examples, the charging element can include an inductive coil, and power can be transferred to the monitoring system via an electromagnetic field.

[0038] System **199** can include camera **108** and control system **140**. Camera **108** can be a video camera configured to perform one or more functionalities, including, but not limited to, determining the position of the user's body, determining the location of the user's body, determining the temperature of the user's body, and determining the temperature of the local ambient. The monitoring system can be configured to utilize the information from camera **108** in conjunction with the information from the one or more sensors (e.g., electrodes **182**, piezoelectric sensors **134**, temperature sensors **138**, accelerometers **142**, and electrical sensors **182**) for sleep analysis and feedback.

[0039] Control system **140** can be configured to control one or more parameters. For example, control system **140** can include temperature sensors **139**, which can measure and provide information to the control system about the room temperature. In some examples, control system **140** can be configured to communicate with mat **102** through wired (e.g., using a cable) or wireless communications. Control panel **140** can include a touch panel and/or a display and can be configured to interface with the user and/or a computer. For example, control panel **140** can display heart rate, heart rate variability, respiratory rate, respiratory rate variability, user's motion, and user's temperature. In some examples, control panel **140** can display analysis regarding the user's sleep and/or can provide suggestions to improve the user's sleep.

[0040] Mat **102** can include one or more electrodes **182**, one or more piezoelectric sensors **134**, plurality of temperature sensors **138**, and one or more accelerometers **142**. The electrodes and sensors included in system **199** can include one or more functionalities and configurations discussed below. System **199** can include a controller configured to determine one or more measurements, such as BCG measurement **123**, ECG measurement **183**, acceleration measurement **143**, temperature measurement **139**, and ICG measurement **133**. Although FIG. **1** illustrates mat **102** as including four different types of sensors, examples of the disclosure can include a monitoring system that includes one or more of the different types of sensors.

[0041] While control system **140** can be included in system **199**, examples of the disclosure can include an arrangement where control system **140** is separate and distinct from system **199**. System **199** can be communicate information (e.g., temperature measurement, acceleration measurement, ICG measurement, ECG measurement, and BCG measurement) to control system **140** through wired or wireless (e.g., local area network) communication means. In some examples, control system **140** can include a transceiver to receive the information from system **199** and a controller or processor to process the information for the analysis (e.g., to determine heart rate, heart rate variability, respiratory rate, and respiratory rate variability).

[0042] FIGS. **2**A-**2**B illustrate top and perspective views of layers included in an exemplary mat according to examples of the disclosure. The exemplary mat can include layer **220** and layer **230**. Layer **220** can include electrode **222**. "Electrodes," referred to herein, can be a conductive unit individually connected for driving or sensing purposes. In some examples, electrode **222** can be configured to cover a substantial (e.g., more than 75%) area of layer **222** and can be continuous (i.e., a discrete piece of material). Layer **230** can include a plurality of electrodes **232**. Electrode **222**, plurality of electrodes **232**, or both can include any conductive material including, but not limited to, silver, copper, gold, aluminum, steel, brass, bronze, and graphite. In some examples, electrode **222** and plurality of electrodes **232** can include the same materials. In some examples, the exemplary mat can include layer **240**. Layer **240** can be configured to provide support or electrical insulation from one or more materials or layers (e.g., the mattress), for example. In some examples, layer **240** can include one or more elec-

trodes (not shown). Although FIGS. **2**A-**2**B illustrate layer **220** as including one electrode and layer **230** as including a plurality of electrodes, each layer can include any number of electrodes.

[0043] FIGS. **2**C-**2**F illustrate cross-sectional views of an exemplary mat according to examples of the disclosure. The exemplary mat can be configured with any numbers of layers and/or arrangement of the layers relative to the other layers. For example, as illustrated in FIG. **2**C, layer **220** can be located on one side of layer **230**, and layer **240** can be located on the other side of layer **230**. Electrode **222** disposed on layer **220** can be located on the side opposite of layer **220** than user **298**. Electrode **232** can be located between layer **230** and layer **240**. Electrode **242** can be located on the side of layer **240** opposite electrode **232**.

[0044] In some examples, as illustrated in FIG. **2**D, electrode **222** can be located on one side of layer **220** closer to user **298** than layer **220**. Electrode **232** can be located on the opposite side of layer **220** than user **298** and between layer **220** and layer **230**. In some examples, as illustrated in FIG. **2**E, electrode **232** can be located closer to user **298** than electrode **222**. Electrode **232** can be disposed on layer **230**, and electrode **222** can be disposed on layer **220**. Layer **230** can be located closer to user **298** than electrode **232**. Additionally, the exemplary mat can include layer **240** located on the opposite side of electrode **222** than layer **220**. In some examples, as illustrated in FIG. **2**F, layer **220** and electrode **222** can be located closer to the user than layer **230** and electrode **232**. Although the figures illustrate one or more electrodes disposed on the corresponding layer, examples of the disclosure can include one or more electrodes embedded entirely or partially within the layer or disposed at least partially on the layer. Although the figures illustrate user **298** located on one side the exemplary mat, examples of the disclosure can include the exemplary mat being capable of functioning as a monitoring system regardless of the side user **298** is located. Furthermore, the exemplary monitoring system can be capable of functioning when user **298** is located in the center or edges of the mat.

[0045] Electrode **222**, electrode **232**, and/or electrode **242** can be configured with one or more functionalities. For example, electrode **222** and electrode **232** can be configured to measure a plurality of capacitance values. Electrode **222** can be configured as a sense electrode, and the plurality of electrodes **232** can be configured as drive electrodes. In some examples, electrode **222** can be configured as a drive electrode, and the plurality of electrodes **232** can be configured as sense electrodes. When an external force is applied, e.g., by the body weight of user **298**, electrode **222** can move closer to electrode **232**, which in turn, can cause a change (e.g., increase) in the mutual capacitance between the electrodes (i.e., sense and drive electrodes). In some examples, electrodes included in the plurality of electrodes **232** can be stimulated one at a time, and the capacitance associated with the stimulated electrode **222** can be measured by sense circuitry. In some examples, electrode **222** can include one or more sections of conductive material electrically coupled together. In some examples, the change in capacitance can be related to the distance between electrode **232** and electrode **222**. One or more images of the strength or intensity of force applied by user **298** can be obtained based on the changes in capacitance.

[0046] In some examples, capacitance sensing can include measuring the capacitance at electrode **222**, plurality of electrodes **232**, or both relative to some reference, such as ground or a ground plane. The capacitance relative to the reference ground can be changed due to at least in part the presence of the user's body. In some examples, sensing can include resistive sensing, where the user's force or body weight can cause the electrodes to electrically contact. The electrodes can be driven and can cause conductive paths; electrically contacting the electrodes can cause a change in resistance (that can be measured as a change in current).

[0047] In some examples, electrode **242** (illustrated in FIG. **2**C) can be configured as a shielding layer to shield the monitoring system from ambient noise. In some examples, electrode **242** can be coupled to drive circuitry, and drive circuitry can drive electrode **242** to a given voltage. In some examples, electrode **242** can be coupled to ground. Although electrode **242** and layer **240** are not illustrated in FIGS. **2**D-**2**F, examples of the disclosure can include any number of substrates and any number of layers configured for shielding.

[0048] The capacitance measurements can be used for detecting the position, location, and/or movement of the body of the user on the mat. FIG. **2**G illustrates an exemplary process flow for capacitive measurements according to examples of the disclosure. Drive circuitry can stimulate one or more drive electrodes, creating a mutual capacitance with one or more sense electrodes (step **252** of process **250**). Sense circuitry can be coupled to one or more sense electrodes. Sense circuitry can measure any changes in capacitance at the sense electrodes, where the changes in capacitance can be due to the user's force or body weight changing the distance between the electrodes (step **254** of process **250**). A controller or processor coupled to sense circuitry can form an image of the user's position and/or location on the mat (step **256** of process **250**). The controller or processor can determine which drive and/or sense electrodes are not affected by the user's force or body weight (step **258** of process **250**). When the capacitance measurements are below a pre-determined threshold, the controller can disable or disconnect the drive and/or sense electrodes to conserve power, for example (step **260** of process **250**). The measured capacitance values can be used to form at least a portion of a ballistocardiography (BCG) measurement (step **262** of process **250**). In some examples, the measured capacitance values can be used to measure displacement of the user's body. The process can be repeated after a predetermined time interval and/or when the user's body position and/or location change (step **264** of process **250**).

[0049] The BCG measurement, taken in step **262** of process **250**, can include changes in electrodes properties due to fine body movement (e.g., caused by the flow of the user's blood with each heartbeat). As blood is being pumped, the user's body can move back and forth (e.g., in a longitudinal direction), and this back and forth movement can be measured by recording or monitoring the changes in capacitance over time. In some examples, the monitoring system can be configured such that measurements from the electrodes located in the immediate periphery (i.e., adjacent to the electrodes located directly under the body of the user) of the user are included in the BCG measurement; since electrodes located in the immediate periphery can be more sensitive to body movement than the electrodes located directly underneath the user's body (e.g., where measurements can be influenced by gross motion). The BCG measurement can be

used at least partially to measure the heart rate, heart rate variability, respiratory rate, and/or respiratory rate variability.

[0050] In some examples, the mat can include one or more dummy sections. FIG. **2**H illustrates an exemplary perspective view of layers included in an exemplary mat according to examples of the disclosure. In some examples, layer **220** can include one or more dummy sections **224**. Dummy sections **224** can be configured to prevent neighboring electrodes from capacitively coupling to each other. In some examples, dummy sections **224** can be floating. In some examples, dummy sections **224** can be coupled to ground or drive circuitry. In some examples, layer **230** can, additionally or alternatively, include dummy sections (not shown).

[0051] In some examples, the layers included in the mat can be spatially separated. FIG. **3**A illustrates a cross-sectional view of an exemplary monitoring system including a mat according to examples of the disclosure. System **399** can include sub-mat **302** and sub-mat **304**. In some examples, user **398** can be located between sub-mat **302** and sub-mat **304**. Sub-mat **302** and sub-mat **304** can be configured with any number of layers and/or arrangement of the layers relative to the other layers. For example, sub-mat **302** can include layer **320** and electrode **322**. Although the figure illustrates layer **320** located closer to user **398** than electrode **322** and layer **330** located closer to user **398** than electrode **332**, examples of the disclosure can include electrode **332** located closer to user **398** than layer **330**, electrode **322** located closer to user **398** than layer **320**, or both. The design and/or operation of layer **330**, plurality of electrodes **332**, and electrode **322** can include the design and/or operation of layer **230**, plurality of electrodes **232**, and electrode **222**, respectively, as discussed above. Sub-mat **304** can include layer **330** and plurality of electrodes **332**.

[0052] With user **398** located between sub-mat **302** and sub-mat **304**, one or more parts of user **398** can cause a change in the distance between plurality of electrodes **322** and electrode **332**. The change in distance between electrodes can be caused by physical properties (e.g., size) of the user's body parts and/or the user's position (e.g., the user can be laying on the user's side). For example, a lower mutual capacitance in one or more regions compared to other regions can be indicative of the presence of one or more user's body parts located between sub-mat **302** and sub-mat **304**. In some examples, system **399** can be configured to approximate the location of one or more user's body parts based on the capacitance value. For example, if the user is sleeping on his or her back (as illustrated in FIG. **3**A), regions with lower mutual capacitance can be associated with body parts (e.g., arms or legs) having a lower profile. Regions with higher mutual capacitance can be associated with body parts (e.g., chest) having a higher profile. Alternatively, a lower mutual capacitance can be associated with the user lying on the user's back, and a higher mutual capacitance can be associated with the user lying on the user's side, for example. The capacitance measurements can include process **250** (illustrated in FIG. **2**G) or self-capacitance measurements, discussed above.

[0053] In one or more regions where sub-mat **302** and sub-mat **304** can be contacting, electrode **322** can be in close proximity to electrode **332** and the mutual capacitance can be larger than in regions where sub-mat **302** and sub-mat **304** can be contacting. In some examples, plurality of electrodes **332** can be stimulated one at a time and the capacitance associated with the stimulated electrode **332** can be measured by circuitry coupled to electrode **322**. In some examples, electrode **322** can include one or more sections of conductive material electrically coupled together.

[0054] FIGS. **3**B-**3**C illustrate cross-sectional views of exemplary mats according to examples of the disclosure. In some examples, as illustrated in FIG. **3**C, system **399** can be configured with the plurality of electrodes **332** included in sub-mat **302** and electrode **322** included in sub-mat **304**. Although FIG. **3**C illustrates layer **320** located closer to user **398** than electrode **322** and layer **330** located closer to user **398** than electrode **332**, examples of the disclosure can include plurality of electrodes **332** located closer to user **398** than layer **330**, electrode **322** located closer to user **398** than layer **320**, or both.

[0055] In some examples, sub-mat **302** can include a switching matrix **391**, as illustrated in FIG. **3**C. Sub-mat **302** can include a plurality of layers of electrodes, such as plurality of electrodes **332** disposed on layer **330** and plurality of electrodes **342** disposed on layer **340**. Switching matrix **391** can be configured to electrically couple one or more electrodes included in the plurality of electrodes **332** together. System **399** can be capable of dynamically switching one or more electrodes utilized for the capacitance measurements. For example, in a first mode, user **398** can be located between sub-mat **302** and sub-mat **304**. Electrode **322** can be configured as a sense electrode, and the plurality of electrodes **332** can be configured as drive electrodes. Changes in capacitance values can be due to the user's body parts increasing the separations between the sense and drive electrodes. In a second mode, sub-mat **304** can be removed from system **399** or located a certain distance away. The separation between sub-mat **304** from sub-mat **302** can prevent electrode **322** from capacitively coupling to plurality of electrodes **332**, or the measured capacitance values can be below a predetermined threshold.

[0056] Switching matrix **391** can electrically couple together the plurality of electrodes **332**. The electrically coupled electrodes **332** can be configured as a sense electrode, and the plurality of electrodes **342** can be configured as drive electrodes. Changes in capacitance values can be due to the user's body weight applying a force that can change the distance between the sense and drive electrodes. When sub-mat **304** is returned back to system **399** and located a close enough distance such that electrode **322** can capacitively couple to electrode **332** (or the measured capacitance values can become greater than the predetermined threshold), system **399** can either remain in the second mode or switch to the first mode.

[0057] In some examples, drive circuitry can drive two or more electrodes differently. For examples, one or more electrodes can be driven by the drive circuitry, whereas other electrodes may not. The system can switch which electrodes to capacitively couple. For example, in a first operation mode, the system can drive electrodes located in sub-mat **302** (or sub-mat **304**) to capacitively couple with sense electrodes also located in sub-mat **302** (or sub-mat **304**). In a second operation mode, the system can drive electrodes located in sub-mat **302** (or sub-mat **304**) to capacitively couple with sense electrodes located in sub-mat **304** (or sub-mat **302**). In some examples, the system can alternate (e.g., time multiplex) between the first and second operation modes. In some examples, the electrodes can be driven with different stimulation signals.

[0058] FIGS. **3D-1** and **3D-2** illustrate an exemplary process flow for dynamically switching one or more electrodes utilized for capacitance measurements according to examples of the disclosure. Drive circuitry can stimulate one or more drive electrodes included in the mat to create a capacitance with one or more sense electrodes (step **372** of process **370**). Sense circuitry can be coupled to one or more sense electrodes. Sense circuitry can determine whether the drive electrodes can capacitively couple to the electrodes (step **374** of process **370**). If there is capacitive coupling (or whether the measured capacitance values are greater than a predetermined threshold), the system can switch to the first mode of measuring capacitance values. Sense circuitry can measure any changes in capacitance caused by the user's body parts creating separations or changes in distances between the drive electrodes and the sense electrodes (step **376** of process **370**). A controller or processor coupled to sense circuitry can form an image of the user's body position and/or location (step **378** of process **370**). The image can comprise matrix of capacitance values. The controller or processor can determine which drive and/or sense electrodes are not affected by the presence of the user's body (e.g., creating separations or reducing the gap between drive and sense electrodes) (step **380** of process **370**) and can disable or disconnect the drive and/or sense electrodes to conserve power, for example (step **382** of process **370**). The measured capacitance values can be used to form at least a portion of a BCG measurement (step **384** of process **370**). The process can be repeated after a predetermined time interval and/or when the user's body position and/or location change (step **386** of process **370**).

[0059] If there is no capacitively coupling or if the measured capacitance values are below a pre-determined threshold (determined in step **374** of process **370**), the system can switch to the second mode of measuring capacitance values. Sense circuitry can measure any changes in capacitance caused by the user's force changing the distance between the drive and sense electrodes (step **388** in process **370**). A controller or processor coupled to sense circuitry can form an image of the user's body position and/location on the mat (step **390** of process **370**). The controller or processor can determine which drive and/or sense electrodes are not affected by the user's force or body weight (step **392** of process **370**) and can disable or disconnect the drive and/or sense electrodes to conserve power, for example (step **394** of process **370**). The measured capacitance values can be used to form at least a portion of a BCG measurement (step **384** of process **370**). The process can be repeated after a predetermined time interval and/or when the user's body position and/or location change (step **386** of process **370**). Although FIGS. **3D-1** and **3D-2** illustrate process **370** as including the determination of whether there is capacitively coupling between the electrodes in the sub-mats after or while stimulating the drive electrodes, examples of the disclosure can include this determination at any time. For example, the system can be configured to periodically determine whether there is capacitive coupling regardless of what step in the process the system is in.

[0060] In some examples, the sub-mat can be capable of being folded and can include a switching matrix to dynamically reconfigure the measurements for such a situation. FIG. **3E** illustrates a cross-sectional view of an exemplary mat including a switching matrix according to examples of the disclosure. Sub-mat **304** can include layer **330**, plurality of electrodes **332**, and switching matrix **393**. In some examples, sub-mat **304** can be folded over such that user **398** can be located between top **303** of sub-mat **304** and bottom **305** of sub-mat **304**. Sub-mat **304** can be configured to measure the capacitance between the plurality of electrodes **332** located in top **303** of sub-mat **304** and the plurality of electrodes **332** located in bottom **305** of sub-mat **304**. Switching matrix **393** can be configured to couple together some of the plurality of electrodes **332** located in one portion (e.g., bottom **305**) of sub-mat **304**. The electrically coupled electrodes located in the one portion (e.g., bottom **305**) can form a mutual capacitance to one or more of the plurality of electrodes **332** located in another portion (e.g., top **303**) of sub-mat **304**.

[0061] To determine whether sub-mat **304** is folded and/or located in close proximity to sub-mat **302**, a test scan can be performed. The test scan can include coupling one or more electrodes **332** (or electrodes included in sub-mat **302**) to drive circuitry and coupling other electrodes (e.g., other electrodes **332**) to sense circuitry. In some examples, the test can include multiple combinations of different electrodes coupled to drive circuitry and different electrodes coupled to sense circuitry. Based on the combination of drive electrodes and sense electrodes where a capacitance value is greater than a pre-determined threshold, the location and/or configuration of sub-mat **302** and sub-mat **304** can be determined.

[0062] FIGS. **4A-4C** illustrate top, perspective, and cross-sectional views of layers included in an exemplary mat according to examples of the disclosure. The exemplary mat can include layer **420**, layer **430**, and layer **440**. Layer **420** can include electrode **422**, and layer **430** can include a plurality of electrodes **432**. The design and/or operation of layer **420**, layer **430**, layer **440**, electrode **422**, and plurality of electrodes **432** can include the design and/or operation of layer **220**, layer **230**, layer **240**, electrode **222**, and plurality of electrodes **232**, respectively, as discussed above.

[0063] In some examples, plurality of electrodes **442** can be configured with a higher granularity than electrode **422** and/or plurality of electrodes **432**. Changes in granularity can be obtained in one or more ways including, but not limited to, different materials and/or material properties, different configurations of coupled electrodes, and different size electrodes. In some examples, electrode **422** and/or plurality of electrodes **432** can be configured with a higher granularity than plurality of electrodes **442**. In some examples, the number of electrodes **432** disposed on layer **430** can be greater than the number of electrodes **442** disposed on layer **440**. In some examples, the number of electrodes **432** disposed on layer **430** can be less than or equal to the number of electrodes **442** disposed on layer **440** (not shown). In some examples, two or more of electrode **422**, plurality of electrodes **432**, and plurality of electrodes **442** can include any conductive material including, but not limited to, silver, copper, gold, aluminum, steel, brass, bronze, and graphite. In some examples, two or more of electrode **422**, plurality of electrodes **432**, and plurality of electrode **442** can include the same materials.

[0064] In some examples, the exemplary mat can include an additional layer (not shown) configured to provide support or electrical insulation from one or more materials or layers (e.g., the mattress). In some examples, the additional layer can include one or more electrodes (not shown).

[0065] In some examples, the monitoring system can include one or more shielding electrodes to limit capacitive coupling of the system with external sources. In some examples, the one or more shielding electrodes can be a separate layer in the system. In some examples, one or more of the plurality of electrodes **432**, plurality of electrodes **442**, or both can be configured as shielding electrodes. In some examples, one or more of the plurality of electrodes **432** (and/or plurality of electrodes **442**) can be configured to measure electrical signals and one or more adjacent electrodes **432** (and/or plurality of electrodes **442**) can be configured for shielding.

[0066] The exemplary mat can be configured with any number of layers and/or arrangement of layers relative to the other layers. For example, as illustrated in FIG. **4**C, layer **430** can be located on one side of layer **420**, and layer **440** can be located on the other side of layer **420**. Plurality of electrodes **432** disposed on layer **430** can be located on the opposite side of layer **430** than user **498**. Electrode **422** can be located between layer **420** and layer **440**, and plurality of electrodes **442** can be located on the opposite side of layer **440** than electrode **422**.

[0067] In additional to measuring changes in capacitance to form one or more images of the user's position and form at least a portion of a BCG measurement, the plurality of electrodes **442** can be configured for sensing electrical signals. The measured electrical signals can be used to form at a least a portion of an electrocardiogram (ECG) measurement. The ECG measurement can include changes in electrical impulses due to heart contractions and blood flow. In some examples, the monitoring system can be configured such that measurements from the electrodes located directly underneath the user's body are included in the ECG measurement, since these electrodes can have higher coupling to the user's electrical impulses. In some examples, the electrodes located directly under the user's body can be effected by less movement than electrodes located in the immediate periphery (i.e., adjacent to the electrodes located directly under the body of the user) of the user's body. The ECG measurement can be used at least partially to measure the heart rate, heart rate variability, respiratory rate, and/or respiratory rate variability.

[0068] FIGS. **4**D-**1** and **4**D-**2** illustrate an exemplary process flow for capacitive and electrical measurements according to examples of the disclosure. In some examples, the monitoring system can operate in multiple modes: one mode (i.e., first mode) for measuring capacitance values and another mode (i.e., second mode) for measuring electrical signals. During the first mode, drive circuitry can stimulate one or more drive electrodes creating a mutual capacitance with one or more sense electrodes (step **452** of process **450**). Sense circuitry can be coupled to one or more sense electrodes. Sense circuitry can measure any changes in capacitance caused by the user's force that can change the distance between the drive and sense electrodes (step **454** of process **450**). A controller or processor coupled to sense circuitry can form an image of the user's body position and/or location on the mat (step **456** of process **450**). The controller or processor can determine which drive and/or sense electrodes are not affected by the user's force or body weight (step **458** of process **450**) and can disable or disconnect the drive and/or sense electrodes to conserve power, for example (step **460** of process **450**). In some examples, the controller can select the drive and/or sense electrodes that are located in the immediate periphery of the user's body or the periphery of the mat for the capacitive measurements. The measured capacitance values can be used to form at least a portion of a BCG measurement (step **462** of process **450**). The first mode can be repeated after a predetermined time interval and/or when the user's body position and/or location change (step **464** of process **450**). In some examples, the first mode can be repeated after the second mode has been completed (step **466** of process **450**).

[0069] During the second mode, one or more electrodes can be configured to measure the electrical impulses from the user's heart (step **468** of process **450**). In some examples, the difference in electrical potential between multiple electrodes can be measured. The controller or processor can determine which electrodes are not affected by the electrical signals of the user's heart (step **470** of process **450**) and can disable or disconnect the electrodes to conserve power, for example (step **472** of process **450**). In some examples, the controller can select the electrodes located underneath the user's body for electrical measurements. The measured electrical signals can be used to form at least a portion of an ECG measurement (step **474** of process **450**). In some examples, the electrical signals can be used to determine the user's body position, user's body location, the location of the user's heart, or a combination thereof (step **476** of process **450**). In some examples, step **456** can be used to form a rough estimate or coarse image of the user's body position and/or location, and step **474** can be used to form a more detailed or finer imager of the user's body position and/or location. The second mode can be repeated after a predetermined time interval and/or when the user's body position and/or location change (step **478** of process **450**). In some examples, the second mode can be repeated after the first mode has been completed (step **480** of process **450**).

[0070] Although FIGS. **4**D-**1** and **4**D-**2** illustrate the controller beginning with the first mode measurement, examples of the disclosure can include beginning with the second mode measurement or beginning with both the first and second mode measurements. Although FIG. **4**D illustrates the controller performing the first and second mode measurements sequentially, examples of the disclosure can include performing the first and second mode measurements concurrently. Moreover, examples of the disclosure can include using information measured during one mode (e.g., first mode) for and/or in conjunction with another mode (e.g., second mode).

[0071] FIG. **4**E illustrates a cross-sectional view of an exemplary mat according to examples of the disclosure. In some examples, the plurality of electrodes **442** can be configured to measure the electrical signals from the heart of user **498**. Configuring the monitoring system such that the plurality of electrodes **442** are located at or near the surface of user **498** can lead to more accurate measurements of the electrical signals. In some examples, layer **440** can be located on one side of layer **420**, and layer **430** can be located on the opposite side of layer **420**. Plurality of electrodes **442** can be located on one side of layer **440**, and user **498** can be located either on the same side of layer **440** (not shown) or on the opposite side of layer **440**. Electrode **422** can be located between layer **420** and layer **430**. Plurality of electrodes **432** can be located on the opposite side of layer **430** than the side that electrode **422** is located on.

[0072] FIG. **4**F illustrates a cross-sectional view of an exemplary mat according to examples of the disclosure. In some examples, the number of layers including electrodes can be reduced and/or the functionality of one or more electrodes can be dynamically switched by including one or more switching matrices, such as switching matrix **491** and switching matrix **492**. Switching matrix **491** can be configured to couple or decouple one or more of the plurality of electrodes **432**, and switching matrix **492** can be configured to couple or decouple one or more of the plurality of electrodes **442**.

[0073] In some examples, switching matrix **491** and switching matrix **492** can be configured for capacitive measurements. Switches included in switching matrix **491** can be configured such that the plurality of electrodes **432** can be electrically isolated from one another and coupled to drive circuitry. Switches included in switching matrix **492** can be configured such that the electrodes in the plurality of electrodes **442** can be electrically coupled together and coupled to sense circuitry.

[0074] In some examples, switching matrix **491** and switching matrix **492** can be configured for ECG measurements and (optional) shielding. Switches included in switching matrix **491** can be configured such that the plurality of electrodes **432** can be electrically isolated from one another. The plurality of electrodes **432** can be configured to measure the electrical signals of user **498**. The switches included in switching matrix **491** can be configured such that the electrodes in the plurality of electrodes **442** are electrically coupled together and function as a shielding layer.

[0075] In some examples, switching matrix **491** and switching matrix **492** can be configured to have different granularities in the mat based on the user's body position and/or location. For example, the switching matrix can decouple electrodes for more granularity in locations where the user's body parts may require a more sensitive measurement (e.g., the area corresponding to the user's heart), or couple electrodes for less granularity in locations where less sensitive measurements are acceptable (e.g., areas where the user's body may not be present).

[0076] In some examples, the monitoring system can include one or more switching matrices, where the switching matrices can be configured to partition (e.g., separate measurement information) the mat into multiple sections. FIG. **5**A illustrates a top view of an exemplary monitoring system including multiple sections according to examples of the disclosure. System **599** can include a plurality of electrodes, such as plurality of electrodes **532**, plurality of electrodes **534**, plurality of electrodes **536**, and plurality of electrodes **538**. Multiple users, such as user **596** and user **598**, can be positioned on system **599**. System **599** can determine that there are multiple users and can partition system **599** into multiple sections, such as section **501** and section **503**. In some examples, measurements in one section, such as section **501**, can be taken independently from measurements in another section, such as section **503**. In some examples, the plurality of sections can be specified at the time of manufacture. In some examples, the size, number, and/or shape of the plurality of sections can be dynamically configured using one or more switching matrices. For example, system **599** can associate user **598** with section **501** and user **596** with section **503**. For capacitance measurements, system **599** can couple section **501** to a first drive and sense circuitry using a switching matrix and can couple section **503** to a second drive and sense circuitry using the same or another switching matrix. The system can be configured to capture a plurality of images, where each image can include a matrix of measurement values that represent the position of the user within a given section. Additionally, a plurality of measurements of electrical signals can be taken, such as a measurement of electrical signals in section **501** that can be separate and independent from the measurement of electrical signals in section **503**. System **599** can associate each measurement with a given user or a given section and can perform analysis specific to that user or section.

[0077] FIGS. **5**B-**1** to **5**B-**3** illustrate an exemplary process flow for dynamically partitioning the mat into multiple sections according to examples of the disclosure. Drive circuitry can stimulate one or more drive electrodes creating a mutual capacitance with one or more sense electrodes (step **552** of process **550**). In some examples, all of the drive electrodes can be stimulated to allow the monitoring system to partition the entire mat. Sense circuitry can be coupled to one or more sense electrodes. Sense circuitry can measure any changes in capacitance caused by the user's force causing changes in the distances between the drive and sense electrodes (step **554** of process **550**). Controller can form an image of the user's body position and/or location on the mat (step **555** of process **550**). Based on the image, the system can determine that there are multiple users located on the mat, and the controller can partition the mat into multiple sections (step **556** of process **550**). In some examples, one or more switching matrices can couple (or decouple) two or more electrodes to decrease (or increase) the granularity (step **558** of process **550**). For example, increased granularity for discerning the boundaries of the body position and/or locations of the multiple users may not be needed, for example, when the users are spatially separated far apart (e.g., more than one electrode not subjected to either user's body can be located between users).

[0078] In some examples, the measurements of each section can be taken independently. Each section can operate in multiple modes: one mode (i.e., first mode) for measuring capacitance values and another mode (i.e., second mode) for measuring electrical signals. In some examples, the mode of operation of a given section can be independent from the other section(s).

[0079] During a first mode for a first section (e.g., section **501** illustrated in FIG. **5**A), drive circuitry can stimulate one or more drive electrodes (e.g., electrodes **536** and electrodes **538** illustrated in FIG. **5**A) in the first section to create a mutual capacitance with one or more sense electrodes in the first section (step **560**A of process **550**). Sense circuitry can be coupled to one or more sense electrodes in the first section. Sense circuitry can measure any changes in capacitance caused by the force of the user (e.g., user **598**) that can change the distance between the drive and sense electrodes associated with the first section (step **562**A of process **550**). A controller or processor coupled to sense circuitry can form an image of the user's body position and/or location in the first section (step **564**A of process **550**). The controller or processor can determine which drive and sense electrodes are not affected by the user's force in the first section (step **566**A of process **550**) and can disable or disconnect the drive and/or sense electrodes (e.g., electrodes **536** illustrated in FIG. **5**A) in the first section to conserve power, for example (step **568**A of process **550**). The measured capacitance values can be used to form at a least a portion of a first BCG

measurement associated with the first section (step **570**A of process **550**). Operation of the first section in the first mode can be repeated after a predetermined time interval and/or when the user's body position and/or location in the first section changes (step **572**A of process **550**). In some examples, operation of the first section in the first mode can be repeated after operation of the first section in the second mode has been completed (step **574**A of process **550**). In some examples, operation of the first section in the first mode can depend on operation of the second section.

[0080] During operation of the first section (e.g., section **501** illustrated in FIG. **5**A) in the second mode, one or more electrodes (e.g., electrode **538** illustrated in FIG. **5**A) can be configured to measure electrical impulses from the heart of the user (e.g., user **598**) located in the first section (step **576**A of process **550**). In some examples, the difference in electrical potentials between multiple electrodes can be measured. The controller or processor can determine which electrodes in the first section are not affected by the electrical signals of the user's heart (step **578**A of process **550**) and can disable or disconnect the electrodes to conserve power, for example (step **580**A of process **550**). The measured electrical signals can be used to form at least a portion of a first ECG measurement (step **582**A of process **550**). In some examples, the electrical signals can be used to determine the user's body position, the user's body location, the location of the user's heart, or a combination thereof (step **584**A of process **550**). In some examples, step **564**A (and/or step **552** and step **554**) can be used to form a rough estimate or coarse image of the user's body position and/or location, and step **584**A can be used to form a more detailed or finer image of the user's body position and/or location. Operation of the first section in the second mode can be repeated after a predetermined time interval and/or when the body position and/or location of the user in the first section change (step **586**A of process **550**). In some examples, operation of the first section in the second mode can be repeated after operation of the first section in the first mode has been completed (step **588**A of process **550**). In some examples, operation of the first section in the second mode can depend on operation of the second section.

[0081] At the same time or at a time different from operating the first section, the second section (e.g., section **503** illustrated in FIG. **5**A) can operate in the first mode. Drive circuitry can stimulate one or more drive electrodes (e.g., electrodes **532** and electrode **534** illustrated in FIG. **5**A) in the second section to create a mutual capacitance with one or more sense electrodes in the second section (step **560**B of process **550**). Sense circuitry can be coupled to one or more sense electrodes in the second section. Sense circuitry can measure any changes in capacitance caused by the force of the user (e.g., user **596**) that can change the distance between the drive and sense electrodes associated with the second section (step **562**B of process **550**). A controller or processor coupled to sense circuitry can form an image of the user's position in the second section (step **564**B of process **550**). The controller or processor can determine which drive and sense electrodes are not affected by the user's force in the second section creating separations between drive and sense electrodes (step **566**B of process **550**) and can disable or disconnect the drive and/or sense electrodes (e.g., electrodes **532** illustrated in FIG. **5**A) in the second section to conserve power, for example (step **568**B of process **550**). The measured capacitance values can be used to form at a least a portion of a second BCG measurement associated with the second section (step **570**B of process **550**). Operation of the second section in the first mode can be repeated after a predetermined time interval and/or when the user's body position and/or location in the second section changes (step **572**B of process **550**). In some examples, operation of the second section in the first mode can be repeated after operation of the second section in the second mode has been completed (step **574**B of process **550**). In some examples, operation of the second section in the first mode can depend on operation of the second section.

[0082] During operation of the second section (e.g., section **503** illustrated in FIG. **5**A) in the second mode, one or more electrodes (e.g., electrode **534** illustrated in FIG. **5**A) can be configured to measure electrical impulses from the heart of the user (e.g., user **596**) located in the second section (step **576**B of process **550**). In some examples, the differences in electrical potential between multiple electrodes can be measured. The controller or processor can determine which electrodes in the second section are not affected by the electrical signals of the user's heart (step **578**B of process **550**) and can disable or disconnect the electrodes to conserve power, for example (step **580**B of process **550**). The measured electrical signals can be used to form at a least a portion of a second ECG measurement (step **582**B of process **550**). In some examples, the electrical signals can be used to determine the user's body position, the user's body location, the location of the user's heart, or a combination thereof (step **584**B of process **550**). In some examples, step **564**B (and/or step **552** and step **554**) can be used to form a rough estimate or coarse image of the user's body position and/or location, and step **584**B can be used to form a more detailed or finer image of the user's body position and/or location. Operation of the second section in the second mode can be repeated after a predetermined time interval and/or when the body position and/or location of the user in the second section changes (step **586**B of process **550**). In some examples, operation of the second section in the second mode can be repeated after operation of the second section in the first mode has been completed (step **588**B of process **550**). In some examples, operation of the second section in the second mode can depend on operation of the first section.

[0083] If any one of the number of users, the size of one or more sections, and the locations of one or more sections changes (step **590** of process **550**), the system can return to selecting the number of sections and partitioning the system into the selected number of sections. Although FIG. **5**B illustrates step **590** as after step **588**A and step **588**B, examples of the disclosure can include selecting the number of sections and partitioning the system into the selected number of sections at any step in the process.

[0084] At any time, the controller can utilize other (e.g., predetermined) information to discern between users and to form the sections. For example, if two users are contacting each other or in close proximity to each other, the controller may not be able to discern whether one or more electrodes are measuring one user, the other user, or both. The controller can associate the measurement information (e.g., stored in a database or in memory) to characteristics of the human anatomy. For example, if the overall measurement image does not match the outline of one user, the controller may determine that more than one user can be utilizing the system. The controller may attempt to match the measurement image to differing combinations of user positions

and/or may use other measured information (e.g., location of a user's heart based on the intensity of the electrical signals) to discern between the multiple users.

[0085] Although FIG. **5**A illustrates the monitoring system being partitioned into two sections, examples of the disclosure can include any number of sections including, but not limited to, one or greater than two sections. In some examples, the monitoring system can be capable of further partitioning selected sections. FIG. **5**C illustrates a top view of an exemplary monitoring system including multiple sections according to examples of the disclosure. Multiple users, such as user **596**, user **597**, and user **598**, can be located on system **599**. System **599** can be capable of detecting the body position and/or locations of the multiple users and can be capable of partitioning the system into a plurality of sections, such as section **503**, section **505**, and section **507**. In some examples, system **599** can select less than all of the sections to further partition into multiple sections, where the partitioning can be dynamic. For example, user **596** and user **598** can be located on system **599**. System **599** can detect the presence of multiple users and can dynamically partition into two sections (e.g., section comprising the left side of system **599** and section **503**). User **598** located in the left section can change body position and/or location. For example, user **598** can move closer to the upper edge of system **599** to make room for user **597**, as shown in FIG. **5**C. System **599** can detect the change in body position and/or location of user **598** and can dynamically partition left section into multiple sections, such as section **505** and section **507**. In some examples, dynamically partitioning a section can include measuring the capacitance values and/or electrical signals using any or all of the techniques previously discussed. In some examples, while dynamically partitioning the left section into multiple sections, the size, shape, and/or location of section **503** can be maintained. In some examples, maintaining section **503** can include omitting capacitance and/or electrical measurements to determine the size, shape, and/or location of section **503** and/or the body position and/or location of user **599**. In some examples, one or more sections can be inactivated if, for example, analysis of the user (e.g., user **597**) is not desired.

[0086] FIGS. **6**A-**6**B illustrate top and perspective views of layers included in an exemplary mat according to examples of the disclosure. The exemplary mat can include layer **620** and layer **630**. The design and/or operation of layer **630**, plurality of electrodes **632**, and electrode **622** can include the design and/or operation of layer **230**, plurality of electrodes **232**, and electrode **222**, respectively, as discussed above. In some examples, the exemplary mat can include an additional layer (not shown) configured to provide support or electrical insulation from one or more materials or layers (e.g., the mattress). In some examples, the additional layer can include one or more electrodes (not shown).

[0087] Layer **630** can further include one or more piezoelectric sensors **634**. Piezoelectric sensors **634** can include a sensor capable of generating one or more electrical signals in response to one or more changes in material properties (e.g., pressure or force). Examples of the disclosure can include piezoresistive sensors. The user's heartbeat can create mechanical impulses, which can change the properties of piezoelectric sensors **634**. The piezoelectric measurement can form at least a portion of a BCG measurement. In some examples, piezoelectric sensors **634** can be located in areas of mat with greater strain than other areas. System **699** can include any number, size, and/or shape of piezoelectric sensors **634**. In some examples, piezoelectric sensors **634** can include sections of rigid material physically connected together by flexible material. The rigidity of a piezoelectric sensor and the material between piezoelectric sensors can be adjusted. In some examples, piezoelectric sensors **634** can be interleaved with one or more rows of plurality of electrodes **632**. In some examples, some of piezoelectric sensors **634** can be activated, and some of the piezoelectric sensors **634** can be deactivated at any given time based on the location of the user. For example, activated piezoelectric sensors can be located directly under (or in the immediate periphery of) the user, whereas deactivated piezoelectric sensors can be located elsewhere.

[0088] FIGS. **6**C-**6**D illustrate cross-sectional views of an exemplary mat according to examples of the disclosure. The exemplary mat can be configured with any number of layers and/or arrangement of layers relative to the other layers. For example, as illustrated in FIG. **6**C, layer **620** can be located on one side of layer **630**, and user **698** can be located on the other side of layer **630**. Plurality of electrodes **632** and plurality of piezoelectric sensors **634** can be located between layer **620** and layer **630**. Electrode **622** can be located on the opposite side of layer **620** than plurality of electrodes **632**. In some examples, as illustrated in FIG. **6**D, layer **630** can be located on one side of layer **620**, and user **698** can be located on the other side of layer **620**. Electrode **622** can be located between layer **620** and layer **630**. Plurality of electrodes **632** and plurality of piezoelectric sensors **634** can be located on the opposite side of layer **630** than electrode **622**.

[0089] Electrode **622**, plurality of electrodes **632**, and plurality of piezoelectric sensors **634** can be configured with one or more functionalities. The design and/or operation of layer **630**, plurality of electrodes **632**, and electrode **622** can include the design and/or operation of layer **230**, plurality of electrodes **232**, and electrode **222**, respectively, as discussed above. In some examples, plurality of electrodes **632** can be configured as multifunctional sensors capable of measuring capacitance during one mode and measuring electrical signals during another mode. In some examples, some of the plurality of electrodes **632** can be configured to measure capacitance and others of the plurality of electrodes **632** can be configured to measure electrical signals. In some examples, the monitoring system can include one or more switching matrices (not shown) configured to couple or decouple together sections of electrode **622** (not shown), two or more of the plurality of electrodes **632**, and/or two or more piezoelectric sensors **634**.

[0090] In some examples, the monitoring system can operate in multiple modes: a first mode for measuring capacitance, a second mode for measuring electrical signals, and a third mode for measuring changes in pressure. FIGS. **6**E-**1** and **6**E-**2** illustrate an exemplary process flow for capacitive, electrical, and piezoelectric measurements according to examples of the disclosure. During the first mode, drive circuitry can stimulate one or more drive electrodes creating a mutual capacitance with one or more sense electrodes (step **652** of process **650**). Sense circuitry can be coupled to one or more sense electrodes. Sense circuitry can measure any changes in capacitance caused by the user's force that can change the distance between the drive and sense electrodes (step **654** of process **650**). A controller or processor coupled to sense circuitry can form an image of the user's body position and/or location on the

mat (step **656** of process **650**). The controller or processor can determine which drive and/or sense electrodes are not affected by the user's force or body weight (step **658** of process **650**) and can disable or disconnect the drive and/or sense electrodes to conserve power, for example (step **660** of process **650**). The measured capacitance values can be used to form at least a portion of a BCG measurement (step **662** of process **650**). The first mode can be repeated after a predetermined time interval and/or when the user's body position and/or location change (step **664** of process **650**). In some examples, the first mode can be repeated after the second mode has been completed (step **666** of process **650**).

[0091] During the second mode, one or more piezoelectric sensors can be configured to measure the changes in pressure on the sensors from the user's body movement (step **668** of process **650**). The controller or processor can determine which piezoelectric sensors are not affected by change in pressure due to the user's body movement (step **670** of process **650**) and can disable or disconnect the piezoelectric sensors to conserve power, for example (step **672** of process **650**). In some examples, the controller or processor can compare the strain of all or some of the piezoelectric sensors; can enable the piezoelectric sensors located in areas of the mat with greater strain than in other areas; and can disable the piezoelectric sensors located in the other areas. The measured piezoelectric signals can be used to form at a least portion of the BCG measurement (step **674** of process **650**).

[0092] In some examples, the electrodes and piezoelectric sensors can be configured to measure the same type of information, but at different levels of granularity. For example, BCG information can be used to determine the user's body movement. Mutual capacitance measurements (i.e., step **654**) can be used to form a rough estimate or coarse determination of the user's body movement, and the piezoelectric measurements (i.e., step **658**) can be used for a more accurate determination of the user's body movement. Although a user's breathing can cause a motion artifact, the breathing motion can different from gross motion due to the user moving or stirring. Being able to discriminate gross motion from breathing can lead to a more accurate analysis. In some examples, the mutual capacitance measurements can be used to measure displacement of the user's body, while the piezoelectric measurements can be used to measure the velocity of the user's body.

[0093] The third mode can be repeated after a predetermined time interval and/or when the user's body position and/or location change (step **676** of process **650**). In some examples, the second mode can be repeated after the first mode has been completed (step **678** of process **650**). Although FIG. **6**E illustrates the controller beginning with the first mode measurement, examples of the disclosure can include beginning with the second mode measurement or beginning with both the first and second mode measurements. Although FIG. **6**E illustrates the controller performing the first and second mode measurements sequentially, examples of the disclosure can include performing the first and second mode measurements concurrently.

[0094] In some examples, monitoring system can include a plurality of piezoelectric sensors. FIGS. **7**A-**7**B illustrate top views of exemplary layers included in a mat according to examples of the disclosure. Piezoelectric sensors can include any size, size, and/or resolution. For example, piezoelectric sensors **735** can be rectangular and/or have a length greater than electrodes **732**, as illustrated in FIG. **7**A. Layer **730** can be configured such that piezoelectric sensor **735** on one side can be configured for one user, and piezoelectric sensor **735** on the other side can be configured for another user. In some examples, the piezoelectric sensors **735** can be electrically isolated from each other allowing independent measurements to be taken for different users. In some examples, some of piezoelectric sensors **735** can be enabled, and some of piezoelectric sensors **735** can be disabled. When the user moves in a direction perpendicular to the long axis of the piezoelectric sensors **735**, the enabled and disabled piezoelectric sensors **735** can change. In some examples, piezoelectric sensors **735** enabled on one side of the mat can be longitudinally displaced from the piezoelectric sensors **735** enabled on the other side. Layer **730** can further include a plurality of electrodes **732**.

[0095] In some examples, piezoelectric sensors **736** can have the same size as electrodes **732**, as illustrated in FIG. **7**B. Layer **730** can include a plurality of electrodes **732** and a plurality of piezoelectric sensors **736**. Given the smaller size and greater number of piezoelectric sensors (e.g., compared to the mat illustrated in FIG. **7**A), the resolution of the piezoelectric measurement can be greater. In some examples, each piezoelectric sensor **736** can include sections of rigid material that can be physically connected to by flexible material. The rigidity of a piezoelectric sensor and the material between piezoelectric sensors can be adjusted. Plurality of piezoelectric sensors **736** can be located in any arrangement including, but not limited to, one or more rows of piezoelectric sensors **736** running across the mat or a matrix of rows and columns of piezoelectric sensors. In some examples, each of the piezoelectric sensors **736** can be electrically isolated and independently controlled from the other piezoelectric sensors **736**. The monitoring system can be configured to form an image representative of the changes in pressure across the mat.

[0096] In some examples, one or more electrodes can be disposed on one or more piezoelectric sensors. FIGS. **7**C-**7**D illustrate top and cross-sectional views of an exemplary mat including electrodes disposed on piezoelectric sensors according to examples of the disclosure. The exemplary mat can include layer **720** and layer **730**. Layer **720** can include electrode **722**.

[0097] Layer **730** can include a plurality of sensors **737**. Plurality of sensors **737** can include one or more electrodes **732** and one or more piezoelectric sensors **736**. Sensors **737** can be capable of measuring capacitance values between electrode **722** and electrode **733**, measuring changes in pressure from piezoelectric sensor **736**, and/or measuring electrical signals from electrode **722** and/or electrode **732**. The mat can be configured with every other row including sensors **737** (i.e., electrodes **732** disposed on piezoelectric sensors **736**) and the other rows including only electrodes **732**, as illustrated in FIG. **7**C.

[0098] FIGS. **7**E-**7**G illustrate cross-sectional views of exemplary mats according to examples of the disclosure. In some examples, as illustrated in FIG. **7**E, system **799** can include sub-mat **702** and sub-mat **704** with user **798** located between sub-mat **702** and sub-mat **704**. Sub-mat **702** can include layer **720** and electrode **722**. In some examples, electrode **722** can be deposited on a substantial (e.g., 75%) area of layer **720**. Electrode **722** can be continuous (i.e., a discrete piece of material). Sub-mat **704** can include layer **730**, a plurality of electrodes **732**, and a plurality of piezo-

electric sensors **734**. Electrode **722**, plurality of electrodes **732**, or both can include any conductive material including, but not limited to, silver, copper, gold, aluminum, steel, brass, bronze, and graphite. In some examples, electrode **722** and plurality of electrodes **732** can include the same materials.

[0099] Electrode **722** and plurality of electrodes **732** can be configured with one or more functionalities. The design and/or operation of layer **730**, plurality of electrodes **732**, and electrode **722** can include the design and/or operation of layer **330**, plurality of electrodes **332**, and electrode **322**, respectively, as discussed above. Additionally, the design and/or operation of piezoelectric sensors **734** and piezoelectric sensors **736** can include the design and/or operation of piezoelectric sensors **634**, as discussed above.

[0100] In some examples, electrode **722** can include one or more sections of conductive material electrically coupled together for capacitance and/or BCG measurements. In some examples, electrode **722** can include a plurality of electrodes and can be further configured as sensing electrodes capable of sensing electrical signals for ECG measurements. In some examples, plurality of piezoelectric sensors **734** can be configured to measure changes in pressure/force caused by the mechanical impulses from the user's blood acceleration. In some examples, plurality of electrodes **732** can be configured as multifunctional sensors capable of measuring capacitance during one mode and measuring electrical signals during another mode. In some examples, some of the plurality of electrodes **732** can be configured to measure capacitance and others of the plurality of electrodes **732** can be configured to measure electrical signals. In some examples, system **799** can include one or more switching matrices (not shown) configured to couple or decouple together sections of electrode **722** (not shown), two or more of the plurality of electrodes **732**, and/or two or more piezoelectric sensors **734**.

[0101] In some examples, sub-mat **702** can include a switching matrix (not shown). The switching matrix can be configured to electrically couple one or more electrodes included in the plurality of electrodes **732** together and/or one or more piezoelectric sensors included in the plurality of piezoelectric sensors **734** together. The system can be capable of dynamically switching one or more electrodes utilized for the capacitance measurements. For example, in a first mode, user **798** can be located between sub-mat **702** and sub-mat **704**. Electrode **722** can be configured as a sense electrode, and the plurality of electrodes **732** can be configured as drive electrodes. Changes in capacitance values can be due to the user's body parts increasing the separations between the sense and drive electrodes. In a second mode, sub-mat **704** can be removed from system **799** or located a certain distance away. The separation between sub-mat **704** from sub-mat **702** can prevent electrode **722** from capacitively coupling to plurality of electrodes **732**, or the measured capacitance values can be below a predetermined threshold.

[0102] The switching matrix can electrically couple together the plurality of electrodes **732** and/or electrically couple together the plurality of piezoelectric sensors **734**. The electrically coupled electrodes **732** can be configured as a drive electrode, and electrode **722** can be configured as a sense electrode. Changes in capacitance values can be due to the user's body weight applying a force that can change the distance between the sense and drive electrodes. When sub-mat **704** is returned back to system **799** and located a close enough distance such that electrode **722** can capacitively couple to the plurality of electrodes **732**, system **799** can remain in the second mode or switch to the first mode.

[0103] Although FIG. **7**E illustrates layer **730** located closer to user **798** than plurality of electrodes **732** and plurality of piezoelectric sensors **734** and layer **720** located closer to user **798** than electrode **722**, examples of the disclosure can include plurality of electrodes **732** and plurality of piezoelectric sensors **734** located closer to user **798** than layer **730**, electrode **722** located closer to user **398** than layer **720**, or both. In some examples, sub-mat **702** and/or sub-mat **704** can include a layer (not shown) configured to provide support or electrical insulation from one or more materials or layers (e.g., the mattress), for example. In some examples, as illustrated in FIG. **7**F, plurality of electrodes **732** and the plurality of piezoelectric sensors **734** can be included in sub-mat **702** along with layer **730**. Additionally or alternatively, electrode **722** and layer **720** can be included in sub-mat **704**.

[0104] In some examples, capacitance values can be measured between sub-mats, between a layer in the sub-mat, or both. FIG. **7**G illustrates a cross-sectional view of an exemplary mat according to examples of the disclosure. In some examples, electrode **722** and electrode **742** can be configured as sense electrodes, and plurality of electrodes **732** can be configured as drive electrodes. System **799** can be configured such that stimulating some of the plurality of electrodes **732** can create a mutual capacitance with electrode **722**, and stimulating others of the plurality of electrodes **732** can create a mutual capacitance with electrode **742**. In this manner, the individual or combination of the measured capacitance values can be used to determine more information about the user's sleep. For example, the user **798** can be positioned with its back contacting sub-mat **702** and fingers contacting only sub-mat **704**. Movement of the user's fingers may not be detected by electrodes located in sub-mat **702** due to the low change in pressure that can be associated with finger movements and the distance from the user's fingers and the electrodes located in sub-mat **702**. However, fingers can be contacting or in close proximity to sub-mat **704**, so one or more electrodes, such as electrode **742**, included sub-mat **704** can be capable of detecting the user's finger movements. In some examples, electrodes included in sub-mat **702** can be configured to measure larger changes in body movements, and electrodes included in sub-mat **704** can be configured to measure smaller changes in body movements.

[0105] In some examples, the mat can include one or more temperature sensors. FIG. **8**A illustrates a top view of an exemplary layer of a mat including a plurality of electrodes, a plurality of piezoelectric sensors, and a plurality of temperature sensors according to examples of the disclosure. Layer **830** can include a plurality of electrodes **832**, a plurality of piezoelectric sensors **834**, and a plurality of temperature sensors **838**. Plurality of electrodes **832** can be configured for measuring capacitance values and/or electrical signals. The design and/or operation of plurality of electrodes **832** and plurality of piezoelectric sensors **834** can include the design and/or operation of plurality of electrodes **232** and plurality of piezoelectric sensors **634**, respectively, as discussed above.

[0106] Plurality of temperature sensors **838** can be any type of sensor capable of measuring temperature including,

but not limited to, a resistance thermometer, a thermistor, and a thermocouple. In some examples, one or more of the plurality of temperature sensors **838** can be located on the same layer as one or more of electrodes **832** and piezoelectric sensors **834**. In some examples, the system can include one or more temperature sensors, such as temperature sensor **836**, configured to measure the temperature of the room. In some examples, temperature sensors **836** can be in addition or instead of temperature sensors (e.g., temperature sensors **139** illustrated in FIG. **1**) located in the control system (e.g., control system **140**). Although FIG. **8**A illustrates three different types of sensors (i.e., electrodes, piezoelectric sensors, and temperature sensors), examples of the disclosure can include some, but not all, of the different types of sensors.

[0107] FIGS. **8**B-**8**C illustrate cross-sectional and top views of the monitoring system including temperature sensors according to examples of the disclosure. The plurality of temperature sensors (e.g., plurality of temperature sensors **838** illustrated in FIG. **8**A) can include multiple sets of temperatures sensors, such as plurality of temperature sensors **835**, plurality of temperature sensors **837**, and plurality of temperature sensors **839**. In some examples, each set can include the same type of temperature sensor. In some examples, temperature measurements from each set can be utilized in a different manner (discussed below). In some examples, plurality of temperature sensors **835** can be located in areas outside of where user **898** can be located.

[0108] Plurality of temperature sensors **837** can be configured to measure the temperature of the local ambient (i.e., the space between the sub-mats **802**). In some examples, plurality of temperature sensors **837** can be located in close proximity to, but not directly below user **898**. In some examples, plurality of temperature sensors **837** can be located at or in close proximity to where sub-mat **804** contacts sub-mat **802** (as illustrated in FIG. **8**B). Plurality of temperature sensors **839** can be configured to measure the temperature of user **898**. By measuring the temperatures of both user **898** and the local ambient, the monitoring system can associate the temperatures in the sleep analysis of the user (discussed below).

[0109] In some examples, system **899** can be capable of determining the location of user **898** to disable or disconnect the temperature sensors (e.g., plurality of temperature sensors **835**) not affected by the user's body temperature or not within close proximity to the user's body. In some examples, plurality of temperature sensors **839** can be located below user **898**. In some examples, system **899** can be configured to dynamically change which temperature sensors are not associated with the user, which temperature sensors are associated with the temperature of user **898**, and which temperature sensors are associated with the local ambient. Any of the temperature sensors (e.g., temperature sensors **935**, temperature sensors **937**, and temperature **939**) can be coupled together using one or more switches.

[0110] FIG. **8**D illustrates an exemplary process flow for temperature measurements according to examples of the disclosure. In some examples, the monitoring system can measure temperatures across the mat and can create a temperature image (step **852** of process **850**). The monitoring system can determine the location of the user's body (step **854** of process **850**). In some examples, the monitoring system can utilize the temperature image to associate boundaries of the user's body to differences in temperature. In some examples, determining the location of the user's body can include any of the capacitance measurements, electrical measurements, piezoelectric measurements, or any combination thereof. For example, plurality of temperature sensors **835** and plurality of temperature sensors **837** can have different temperatures than plurality of temperature sensors **839** due to the differences in temperature between locations where the user is not located (measured by plurality of temperature sensors **835** and plurality of temperature sensors **837**) and locations where the user is located (measured by the plurality of temperature sensors **839**). Based on the different temperatures, the monitoring system can determine where the user's body is located. In some examples, plurality of temperature sensors **837** can have different temperatures than plurality of temperature sensors **835** due to the gap between sub-mat **802** and sub-mat **804** (as illustrated in FIG. **8**B), and monitoring system can further uses these differences to determine the user's body location and/or to associate the temperature sensors in the sleep analysis of the user.

[0111] In some examples, the monitoring system can assign each temperature sensor to a certain set (step **856** of process **850**), where each set can correspond to a type of area (e.g., locations not in close proximity to the user, locations in close proximity to the user, locations underneath the user) of the mat. A controller coupled to the temperature sensors can determine which temperature sensors correspond to locations not in close proximity to the user (step **858** of process **850**) and can disable or disconnect those temperature sensors to conserve power, for example (step **860** of process **850**). The measured temperatures can be used at least partially in determining the temperatures of the user's body and local ambient (step **862** of process **850**). Examples of the disclosure can include measuring capacitance values, electrical signals, and/or piezoelectric signals at the same time or at different times than measuring the temperatures.

[0112] In some examples, the mat can include one or more accelerometers. FIG. **9** illustrates a top view of an exemplary layer of a mat including a plurality of electrodes, a plurality of piezoelectric sensors, a plurality of temperature sensors, and a plurality of accelerometers according to examples of the disclosure. Layer **930** can include a plurality of electrodes **932**, a plurality of piezoelectric sensors **934**, a plurality of temperature sensors **938**, and a plurality of accelerometers **942**. The design and/or operation of plurality of electrodes **932** and plurality of piezoelectric sensors **934** can include the design and/or operation of plurality of electrodes **232** and plurality of piezoelectric sensors **634**.

[0113] Plurality of accelerometers **942** can any type of device configured for measuring acceleration or vibrations. In some examples, the plurality of accelerometers can be configured to measure velocity of the user's body. In some examples, one or more of the plurality of accelerometers **942** can be located on the same layer as one or more of electrodes **932**, piezoelectric sensors **934**, and plurality of temperature sensors **938**. In some examples, the monitoring system can include one or more accelerometers that can be located in areas (e.g., structure of bed **110** illustrated in FIG. **1**) of the monitoring system different from the sub-mats. By including one or more separate accelerometers in a location different from the sub-mats, the controller can be capable of including or utilizing the measurement from the one or more separate

accelerometers to differentiate the acceleration measurements from the other measurements (e.g., capacitive, electrical, and piezoelectric).

[0114] In one or more of the exemplary monitoring systems described above, the monitoring system can be configured to measure impedance cardiography (ICG). The ICG measurement can be used to measure the impedance and the total electrical conductivity of the user's body. The ICG measurement can be used at least partially to measure the heart rate, heart rate variability, respiratory rate, and/or respiratory rate variability. In some examples, one or more electrodes can be configured for an ICG measurement by measuring the change in impedance due to the user's electrical conductivity.

[0115] FIG. **10**A illustrates a top view of an exemplary layer included in a mat configured for ICG measurements, and FIG. **10**B illustrates a corresponding circuit diagram according to examples of the disclosure. System **1099** can include layer **1030** and a plurality of electrodes, such as plurality of electrodes **1032**, plurality of electrodes **1034**, and plurality of electrodes **1036**. Plurality of electrodes **1034** can be located directly under the body of user **1098**. Plurality of electrodes **1036** can be located in the immediate periphery (i.e., adjacent to the electrodes located directly under the body of the user) of the user's body. Plurality of electrodes **1032** can be located in the periphery of the mat. In some examples, one or more electrodes can be located in both the immediate periphery of the user's body and the periphery of the mat. Plurality of electrodes **1032**, plurality of electrodes **1036**, or both can be coupled to drive circuitry **1096**. Drive circuitry **1096** can be configured to drive current through the electrodes coupled to it. Plurality of electrodes **1034** can be coupled to sense circuitry **1097**. Sense circuitry **1097** can be configured to measure changes in impedances and transmit the measured impedance values to controller **1095**.

[0116] In some examples, one or more of plurality of electrodes **1032**, plurality of electrodes **1034**, and plurality of electrodes **1036** can be configured for capacitive, electrical, or impedance measurement during one operation mode and can be configured for another (e.g., capacitive, electrical, or impedance) measurement during another operation mode. In some examples, drive circuitry for capacitive measurements can be the same as drive circuitry for impedance measurements. In some examples, drive circuitry for capacitive measurements can be different from drive circuitry for impedance measurements. In some examples, the frequency for stimulating the electrodes for impedance measurements can be included in a narrow band. In some examples, the frequency for stimulating the electrodes for impedance measurements can include 50 Hz.

[0117] FIG. **10**C illustrates an exemplary process flow configured for impedance measurement according to examples of the disclosure. In some examples, the monitoring system can operate in multiple modes: one mode (i.e., first mode) for measuring electrical signals and another mode (i.e., second mode) for measuring changes in impedances. During the first mode, one or more electrodes can be configured to measure the user's electrical signals (step **1052** of process **1050**). In some examples, the difference in electrical potential between multiple electrodes can be measured. The controller or processor can determine which electrodes are not affected by the user's electrical signals (step **1054** of process **1050**) and can disable or disconnect the electrodes to conserve power, for example (step **1056** of process **1050**). In some examples, the controller can select the electrodes located underneath the user's body for electrical measurements. The measured electrical signals can be used to form at least a portion of an ECG measurement (step **1058** of process **1050**). In some examples, the electrical signals can be used to determine the user's body position, user's body location and/or location of the user's heart (step **1060** of process **1050**). In some examples, step **1052** can be used to form a rough estimate or coarse image of the user's body position and/or location, and step **1060** can be used to form a more detailed or finer imager of the user's body position and/or location. The second mode can be repeated after a predetermined time interval and/or when the user's body position and/or location change (step **1062** of process **1050**). In some examples, the second mode can be repeated after the first mode has been completed (step **1064** of process **1050**).

[0118] During the second mode, one or more electrodes can be coupled to drive circuitry. The drive electrodes can be stimulated with a stimulation frequency (step **1066** of process **1050**). In some examples, the difference in impedance between multiple electrodes can be measured. In some examples, the controller can select the electrodes (e.g., electrodes **1036** illustrated in FIG. **10**A) located in the immediate periphery of the user's body as the drive electrodes. In some examples, the controller can select the electrodes (e.g., electrodes **1032** illustrated in FIG. **10**A) located in the periphery of the mat as the drive electrodes. One or more sense electrodes can be coupled to sense circuitry (e.g., sense circuitry **1097** illustrated in FIG. **10**B). Sense circuitry can measure the changes in impedances (step **1068** of process **1050**). The measured impedance values can be used to form at a least a portion of an ICG measurement (step **1070** of process **1050**). The second mode can be repeated after a predetermined time interval and/or when the user's body position and/or location change (step **1072** of process **1050**). In some examples, the second mode can be repeated after the first mode has been completed (step **1074** of process **1050**).

[0119] The monitoring system can be configured in one or more measurement modes at a given time. For example, as illustrated in FIG. **11**A, the monitoring system can be configured to time multiplex and cycle between the different measurement modes (e.g., capacitance measurement in t**1**, electrical measurement in t**2**, piezoelectric measurement in t**3**, temperature measurement in t**4**, acceleration measurement in t**5**, and impedance measurement in t**6**). In some examples, as illustrated in FIG. **11**B, the monitoring system can be configured for one or more measurements responsive to the user's action. For example, the system can be in a standby mode during t**1**. The user's body position can move (i.e., user action during time t**2**), and the monitoring system can be configured for capacitive and electrical measurements, in response to the user action, during time t**3**. In some examples, as illustrated in FIG. **11**C, the monitoring system can be configured for one or more first measurements responsive to one or more changes in conditions. For example, the monitoring system can be configured for periodically measuring the temperature of the room using a control panel (e.g., control panel **140** illustrated in FIG. **1**) during standby mode in time t**1**. The monitoring system can determine that the temperature of the room increased above a predetermined threshold during time t**2** (i.e., change in conditions). In response to the change in temperature, the

monitoring system can measure the temperature of the local ambient and the user's body temperature during time t**3**. In some examples, one or more second measurements can be performed conditioned upon the one or more first measurements. If the temperature of the local ambient and/or the user's body temperature increased to greater than another predetermined threshold, then the user may have transitioned to a different sleep state, which may have affected the user's respiratory rate and respiratory rate variability. The monitoring system can be configured for piezoelectric measurements during time t**4** to measure the user's respiratory rate and respiratory rate variability.

[0120] The monitoring system can be further configured to provide analysis to the user by giving the user feedback regarding the consistency, quality, and duration of the user's sleep. For example, the system can correlate disruption of one user's sleep with movement and/or position of another user in the bed. The monitoring system can provide feedback based on the movement and/or position of other users in the bed and can help the users analyze and troubleshoot their sleep.

[0121] In some examples, the system can correlate disruption of a user's sleep to one or more room conditions (e.g., room temperature, ambient lights, and environmental sounds). In some examples, the correlation can be used to adjust the temperature of the room through the control system and/or adjust the temperature of the local ambient through active heating or cooling of the mat. In some examples, the monitoring system can determine that the thermal comfort of multiple users can be different, and active heating and/or cooling can be used to accommodate the differences in thermal comfort. In some examples, the monitoring system can communicate one or more non-system components (e.g., window blinds) to enhance the ambient conditions. In some examples, the monitoring system can include one or more actuators in the mat or in communication with the mat. The one or more actuators can be configured to, for example, wake up one or more users based on the user's sleep state, duration of sleep, and/or time of day.

[0122] In some examples, the monitoring system can compare present sleep analysis and measurements with historical sleep analysis and measurements. The monitoring system can notice a change in sleep patterns over the course of time and can alert the user or provide feedback.

[0123] As discussed above, examples of the disclosure can include measuring a plurality of vital signs for one or more users. Additional information can be used to improve the delivery of measured information, analysis, or any other content that may be of interest to the users. In some examples, the measured information, analysis, or other content may include personal information that may uniquely identify the user or may be used to contact or locate the user. Such personal information can include geographic information, demographic information, telephone numbers, email addresses, mailing addresses, home addresses, or other identifying information. In some examples, the use of such personal information can be used to the benefit of the user. For example, the personal information can be used to deliver to the user the measured information, analysis, or other content. Use of personal information can include, but is not limited to, enabling timely and controlled delivery of the content.

[0124] The disclosure also contemplates that an entity that may be using (e.g., measuring, collecting, analyzing, disclosing, transferring, and/or storing) the personal information will comply with well-established privacy policies and/or privacy practices. These privacy policies and/or privacy practices can be generally recognized as meeting (or exceeding) industry or governmental requirements for private and secure personal information and should be implemented and consistently used. For example, personal information should be collected for legitimate and reasonable purposes and should not be shared (e.g., sold) outside of those purposes. Furthermore, collected personal information should occur only after receiving the informed consent of the user(s). To adhere to privacy policies and/or privacy practices, entities would take any steps necessary for safeguarding and securing outside access to the personal information. In some examples, entities can subject themselves to third party evaluation(s) to certify that the entities are adhering to the well-established, generally recognized privacy policies and/or privacy practices.

[0125] In some examples, the user(s) can selectively block or restrict access to and/or use of the personal information. The monitoring system can include one or more hardware components and/or one or more software applications to allow the user(s) to selective block or restrict access to and/or use of the personal information. For example, the monitoring system can be configured to allow users to "opt in" or "opt out" of advertisement delivery services when collecting personal information during registration. In some examples, a user can select which information (e.g., home address) to withhold from the advertisement delivery services.

[0126] Although examples of the disclosure can include monitoring systems and method for measuring vital signs with the use of the user's personal information, examples of the disclosure can also be capable of one or more functionalities and operation without the user's personal information. Lack of all or a portion of the personal information may not render the monitor systems and methods inoperable. In some examples, content can be selected and/or delivered to the user based on non-user specific personal (e.g., publicly available) information.

[0127] A system for determining one or more physiological signals of a user is disclosed. The system can comprise: a first one or more electrodes configured to measure one or more electrical signals; a second one or more electrodes configured to capacitively couple to the first one or more electrodes; and logic configured to: detect a plurality of changes in capacitive coupling between the first one or more electrodes and the second one or more electrodes; determine at least one or more of one or more positions, one or more body motions, and one or more locations of the user based on the plurality of changes in capacitive coupling; detect the one or more electric signals; and determine one or more physiological signals based at least in part on the plurality of changes in capacitive coupling and the one or more electrical signals. Additionally or alternatively, in some examples, the first one or more electrodes are located within a first portion of the system, and the second one or more electrodes are located within a second portion of the system, the second portion is at least partially physically separated from the first portion. Additionally or alternatively, in some examples, the first portion is included in a sheet, and the second portion is included in a blanket. Additionally or alternatively, in some

examples, the system further comprises: one or more switches configured to electrically couple at least two of the first one or more electrodes together or at least two of the second one or more together, wherein the logic is further configured to associate a decrease in each of the plurality of changes in capacitive coupling to an increase in gap due to a body of the user physically separating the first one or more first electrodes from the second one or more electrodes. Additionally or alternatively, in some examples, the system further comprises: a first section with a first granularity; a second section with a second granularity capable of being different from the first granularity; and one or more switches configured to couple or decouple the first one or more electrodes together, the second one or more electrodes together, or both to dynamically change one or more of the first and second granularities.

[0128] A method for determining one or more physiological signals of a user is disclosed. The method can comprise: stimulating a first one or more electrodes; coupling a second one or more electrodes to sense circuitry, the second one or more electrodes configured to capacitively coupling to the first one or more electrodes; detecting a plurality of changes in capacitive coupling at the second one or more electrodes; determining at least one of more of one or more positions, one or more body motions, and one or more locations of the user based on the plurality of changes in capacitive coupling; detecting one or more electrical signals using the second one or more electrodes; and determining one or more physiological signals based on at least in part to the plurality of changes in capacitive coupling and the one or more electrical signals. Additionally or alternatively, in some examples, the method further comprises: forming electrocardiography information from at least the one or more electrical signals, wherein the one or more physiological signals include one or more of a heart rate, heart rate variability, a respiratory rate, and respiratory rate variability. Additionally or alternatively, in some examples, the method further comprises: forming ballistocardiography information from at least the plurality of changes in capacitive coupling, wherein the one or more physiological signals include one or more of a heart rate, heart rate variability, a respiratory rate, and respiratory rate variability. Additionally or alternatively, in some examples, the method further comprises: determining gross motion based on the plurality of changes in capacitive coupling; and determining fine body movements based on the one or more electrical signals. Additionally or alternatively, in some examples, the method further comprises: determining that a change in capacitive coupling between at least one of the first one or more electrodes and at least one of the second one or more electrodes is less than a predetermined threshold; electrically coupling the first one or more electrodes together; stimulating a third one or more electrodes, the third one or more electrodes configured to capacitively couple to the first one or more electrodes; coupling the first one or more electrodes to sense circuitry; and detecting a second plurality of changes in capacitive coupling at the first one or more electrodes. Additionally or alternatively, in some examples, the method further comprises: dynamically changing a granularity of at least a section of the system by electrically coupling or decoupling at least two of the first one or more electrodes, at least two of the second one or more electrodes, or both. Additionally or alternatively, in some examples, the method further comprises: associating a first of the plurality of changes in capacitive coupling, a first of the one or more electrical signals, or both to a first user; and associating a second of the plurality of changes in capacitive coupling, a second of the one or more electrical signals, or both to a second user. Additionally or alternatively, in some examples, the method further comprises: determining one or more temperature values with a plurality of temperature sensors; and refining the determination of the at least one of the one or more positions, one or more body motions, one or more locations, or both of the user based on the one or more temperature values. Additionally or alternatively, in some examples, the method further comprises: determining one or more temperature values with a plurality of temperature sensors; associating a first set of the one or more temperature values to a local ambient; and associating a second set of the one or more temperature values to a temperature of the user.

[0129] A system for determining one or more physiological signals of a user is disclosed. The system comprises: a plurality of electrodes configured to operate in at least one operation mode, wherein the operation modes comprise: capacitance measurement mode, electrical measurement mode, and impedance measurement; one or more piezoelectric sensors configured to measure one or more mechanical impulses; and logic further configured to: determine one or more values, the one or more values being one or more of changes in capacitive coupling, electrical signals, and impedance using the plurality of electrodes, determine at least one or more of the one or more positions, one or more body motions, and one or more locations of the user based on the one or more values; determine one or more mechanical impulses using the one or more piezoelectric sensors; and determine the one or more physiological signals based at least in part on the one or more values and the one or more mechanical impulses. Additionally or alternatively, in some examples, the one or more piezoelectric sensors include one or more sections of rigid material physically connected with flexible material. Additionally or alternatively, in some examples, the one or more piezoelectric sensors are arranged in one or more rows, one or more columns, or both of piezoelectric sensors, each piezoelectric sensor capable of being independently controlled. Additionally or alternatively, in some examples, the one or more piezoelectric sensors are interleaved with the plurality of electrodes. Additionally or alternatively, in some examples, at least some of the plurality of electrodes are disposed on the one or more piezoelectric sensors. Additionally or alternatively, in some examples, the system further comprises: a plurality of temperature sensors configured to measure one or more temperatures, wherein the plurality of temperature sensors are arranged in one or more rows, one or more columns, or both of temperature sensors, and further wherein the plurality of temperature sensors are interleaved with at least one of the plurality of electrodes and the one or more piezoelectric sensors. Additionally or alternatively, in some examples, the system further comprises: one or more accelerometers configured to measure one or more acceleration values, wherein the one or more accelerometers are arranged in one or more rows, one or more columns, or both of accelerometers, and wherein the one or more accelerometers are interleaved with at least one of the plurality of electrodes, the one or more piezoelectric sensors, and the one or more temperature sensors. Additionally or alternatively, in some examples, the system further comprises: one or more accelerometers configured to measure one or more acceleration

values, wherein at least one of the one or more accelerometers is located on a frame of a bed. Additionally or alternatively, in some examples, the system further comprises: one or more actuators configured to provide motion or vibration to the system. Additionally or alternatively, in some examples, the system further comprises: a transceiver configured for communicating with one or more components separate and distinct from the system. Additionally or alternatively, in some examples, the system includes one or more of a sheet, blanket, and pillow.

[0130] A method for determining one or more physiological signals of a user is disclosed. The method can comprise: stimulating a first one or more electrodes; coupling a second one or more electrodes to sense circuitry, the second one or more electrodes configured to capacitively couple to the first one or more electrodes; detecting a plurality of changes in capacitive coupling at the second one or more electrodes; determining movement information of the user based on the plurality of changes in capacitive coupling, the determination having a first granularity; detecting one or more mechanical impulses with one or more piezoelectric sensors; and determining movement information of the user based on the one or more mechanical impulses, the determination having a second granularity greater than the first granularity.

[0131] A method of analyzing a sleep of a user is disclosed. The method can comprise: operating a monitoring system in at least two operation modes, the operation modes comprising: capacitance measurement mode, electrical measurement mode, piezoelectric measurement mode, temperature measurement mode, acceleration measurement mode, impedance measurement mode, and standby mode. Additionally or alternatively, in some examples, at least two operation modes are operated concurrently. Additionally or alternatively, in some examples, the operation modes alternate. Additionally or alternatively, in some examples, the method further comprises: detecting one or more changes in conditions associated with the system; and dynamically switching to one or more operating modes based on the one or more changes in conditions.

[0132] While various examples have been described above, it should be understood that they have been presented by way of example only, and not by way of limitation. Although examples have been fully described with reference to the accompanying drawings, the various diagrams can depict an exemplary architecture or other configuration for this disclosure, which is done to aid in the understanding of the features and functionality that can be included in the disclosure. The disclosure is not restricted to the illustrated exemplary architectures or configurations, but can be implemented using a variety of alternative architectures and configurations. Additionally, although the disclosure is described above in terms of various examples and implementations, it should be understood that the various features and functionality described in one or more of the examples are not limited in their applicability to the particular example with which they are described. They instead can be applied alone or in some combination, to one or more of the other examples of the disclosure, whether or not such examples are described, whether or not such features are presented as being part of a described example. Thus, the breadth and scope of the present disclosure should not be limited by any of the above-described examples.

What is claimed is:

1. A system for determining one or more physiological signals of a user, the system comprising:
- one or more first electrodes configured to measure one or more electrical signals;
- one or more second electrodes configured to capacitively couple to the one or more first electrodes; and
- logic configured to:
  - detect a plurality of changes in capacitive coupling between the one or more first electrodes and the one or more second electrodes;
  - determine at least one or more of one or more positions, one or more body motions, and one or more locations of the user based on the plurality of changes in capacitive coupling;
  - detect the one or more electric signals; and
  - determine one or more physiological signals based at least in part on the plurality of changes in capacitive coupling and the one or more electrical signals.

2. The system of claim **1**, wherein the one or more first electrodes are located within a first portion of the system, and the one or more second electrodes are located within a second portion of the system, the second portion is at least partially physically separated from the first portion.

3. The system of claim **2**, wherein the first portion is included in a sheet, and the second portion is included in a blanket.

4. The system of claim **1**, further comprising:
- one or more switches configured to electrically couple at least two of the one or more first electrodes together or at least two of the one or more second electrodes together,
- wherein the logic is further configured to associate a decrease in each of the plurality of changes in capacitive coupling to an increase in gap due to a body of the user physically separating the one or more first electrodes from the one or more second electrodes.

5. The system of claim **1**, further comprising:
- a first section with a first granularity;
- a second section with a second granularity capable of being different from the first granularity; and
- one or more switches configured to couple or decouple the one or more first electrodes together, the one or more second electrodes together, or both to dynamically change one or more of the first and second granularities.

6. A method for determining one or more physiological signals of a user, the method comprising:
- stimulating one or more first electrodes;
- coupling one or more second electrodes to sense circuitry, the one or more second electrodes configured to capacitively coupling to the one or more first electrodes;
- detecting a plurality of changes in capacitive coupling at the one or more second electrodes;
- determining at least one or more of one or more positions, one or more body motions, and one or more locations of the user based on the plurality of changes in capacitive coupling;
- detecting one or more electrical signals using the one or more second electrodes; and
- determining one or more physiological signals based on at least in part to the plurality of changes in capacitive coupling and the one or more electrical signals.

7. The method of claim **6**, further comprising:
forming electrocardiography information from at least the one or more electrical signals, wherein the one or more physiological signals include one or more of a heart rate, heart rate variability, a respiratory rate, and respiratory rate variability.

8. The method of claim **6**, further comprising:
forming ballistocardiography information from at least the plurality of changes in capacitive coupling, wherein the one or more physiological signals include one or more of a heart rate, heart rate variability, a respiratory rate, and respiratory rate variability.

9. The method of claim **8**, further comprising:
determining gross motion based on the plurality of changes in capacitive coupling; and
determining fine body movements based on the one or more electrical signals.

10. The method of claim **6**, further comprising:
determining that a change in capacitive coupling between at least one of the one or more first electrodes and at least one of the one or more second electrodes is less than a predetermined threshold;
electrically coupling the one or more first electrodes together;
stimulating one or more third electrodes, the one or more third electrodes configured to capacitively couple to the one or more first electrodes;
coupling the one or more first electrodes to sense circuitry; and
detecting a second plurality of changes in capacitive coupling at the one or more first electrodes.

11. The method of claim **6**, further comprising:
dynamically changing a granularity of at least a section of the system by electrically coupling or decoupling at least two of the one or more first electrodes, at least two of the one or more second electrodes, or both.

12. The method of claim **6**, further comprising:
associating a plurality of first changes in capacitive coupling, one or more first electrical signals, or both to a first user, wherein the plurality of first changes in capacitive coupling are included in the plurality of changes in capacitive coupling and the one or more first electrical signals are included in the one or more electrical signals; and
associating a plurality of second changes in capacitive coupling, one or more second electrical signals, or both to a second user, wherein the plurality of second changes in capacitive coupling are included in the plurality of changes in capacitive coupling an the one or more second electrical signals are included in the one or more electrical signals.

13. The method of claim **6**, further comprising:
determining one or more temperature values with a plurality of temperature sensors; and
refining the determination of the at least one of the one or more positions, one or more body motions, and one or more locations of the user based on the one or more temperature values.

14. The method of claim **6**, further comprising:
determining one or more temperature values with a plurality of temperature sensors;
associating a first set of the one or more temperature values to a local ambient; and
associating a second set of the one or more temperature values to a temperature of the user.

15. A system for determining one or more physiological signals of a user, the system comprising:
a plurality of electrodes configured to operate in at least one operation mode, wherein the operation modes comprise: capacitance measurement mode, electrical measurement mode, and impedance measurement mode;
one or more piezoelectric sensors configured to measure one or more mechanical impulses; and
logic further configured to:
determine one or more values, the one or more values being one or more of changes in capacitive coupling, electrical signals, and impedance using the plurality of electrodes,
determine at least one or more of the one or more positions, one or more body motions, and one or more locations of the user based on the one or more values;
determine one or more mechanical impulses using the one or more piezoelectric sensors; and
determine the one or more physiological signals based at least in part on the one or more values and the one or more mechanical impulses.

16. The system of claim **15**, wherein the one or more piezoelectric sensors include one or more sections of rigid material physically connected with flexible material.

17. The system of claim **15**, wherein the one or more piezoelectric sensors are arranged in one or more rows, one or more columns, or both of piezoelectric sensors, each piezoelectric sensor capable of being independently operated.

18. The system of claim **15**, wherein the one or more piezoelectric sensors are interleaved with the plurality of electrodes.

19. The system of claim **15**, further comprising:
a plurality of temperature sensors configured to measure one or more temperatures, wherein the plurality of temperature sensors are arranged in one or more rows, one or more columns, or both of temperature sensors, and
further wherein the plurality of temperature sensors is interleaved with at least one of the plurality of electrodes and the one or more piezoelectric sensors.

20. The system of claim **19**, further comprising:
one or more accelerometers configured to measure one or more acceleration values, wherein the one or more accelerometers are arranged in one or more rows, one or more columns, or both of accelerometers, and
wherein the one or more accelerometers are interleaved with at least one of the plurality of electrodes, the one or more piezoelectric sensors, and the one or more temperature sensors.

* * * * *