US 20160345449A1

(19) United States

(12) Patent Application Publication

Prest et al.

(10) Pub. No.: US 2016/0345449 A1

(43) Pub. Date: Nov. 24, 2016

(54) **GLASS ENCLOSURE**

(71) Applicant: **Apple Inc.**, Cupertino, CA (US)

(72) Inventors: **Christopher Prest**, San Francisco, CA (US); **Emery A. Sanford**, San Francisco, CA (US)

(21) Appl. No.: **15/226,737**

(22) Filed: **Aug. 2, 2016**

Related U.S. Application Data

(63) Continuation of application No. 14/447,507, filed on Jul. 30, 2014, now Pat. No. 9,439,305, which is a continuation of application No. 13/233,940, filed on Sep. 15, 2011, now Pat. No. 8,824,140.

(60) Provisional application No. 61/384,211, filed on Sep. 17, 2010.

Publication Classification

(51) **Int. Cl.**

H05K 5/02	(2006.01)
G02F 1/1333	(2006.01)
H04B 1/3888	(2006.01)
H05K 5/00	(2006.01)
G06F 1/16	(2006.01)
H04M 1/02	(2006.01)

(52) **U.S. Cl.**

CPC ***H05K 5/0217*** (2013.01); ***G06F 1/1643*** (2013.01); ***H04M 1/0249*** (2013.01); ***H04B 1/3888*** (2013.01); ***G06F 1/1656*** (2013.01); ***H05K 5/0017*** (2013.01); ***H05K 5/0086*** (2013.01); ***G02F 1/13338*** (2013.01); *H04M 2201/38* (2013.01)

(57) **ABSTRACT**

A handheld computing device that includes an enclosure having structural walls formed from a glass material that can be radio-transparent. The enclosure can be formed from a hollow glass tube or two glass members bonded together. A laser frit bonding process may be used to hermetically seal the two glass members together to create a water resistant electronic device.

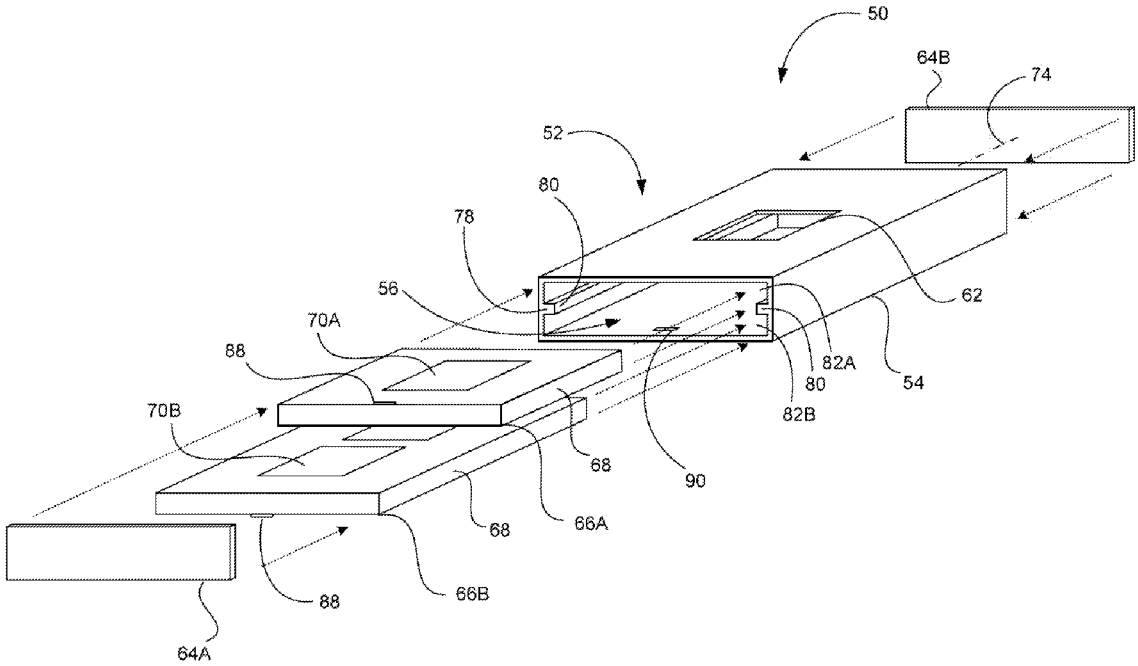

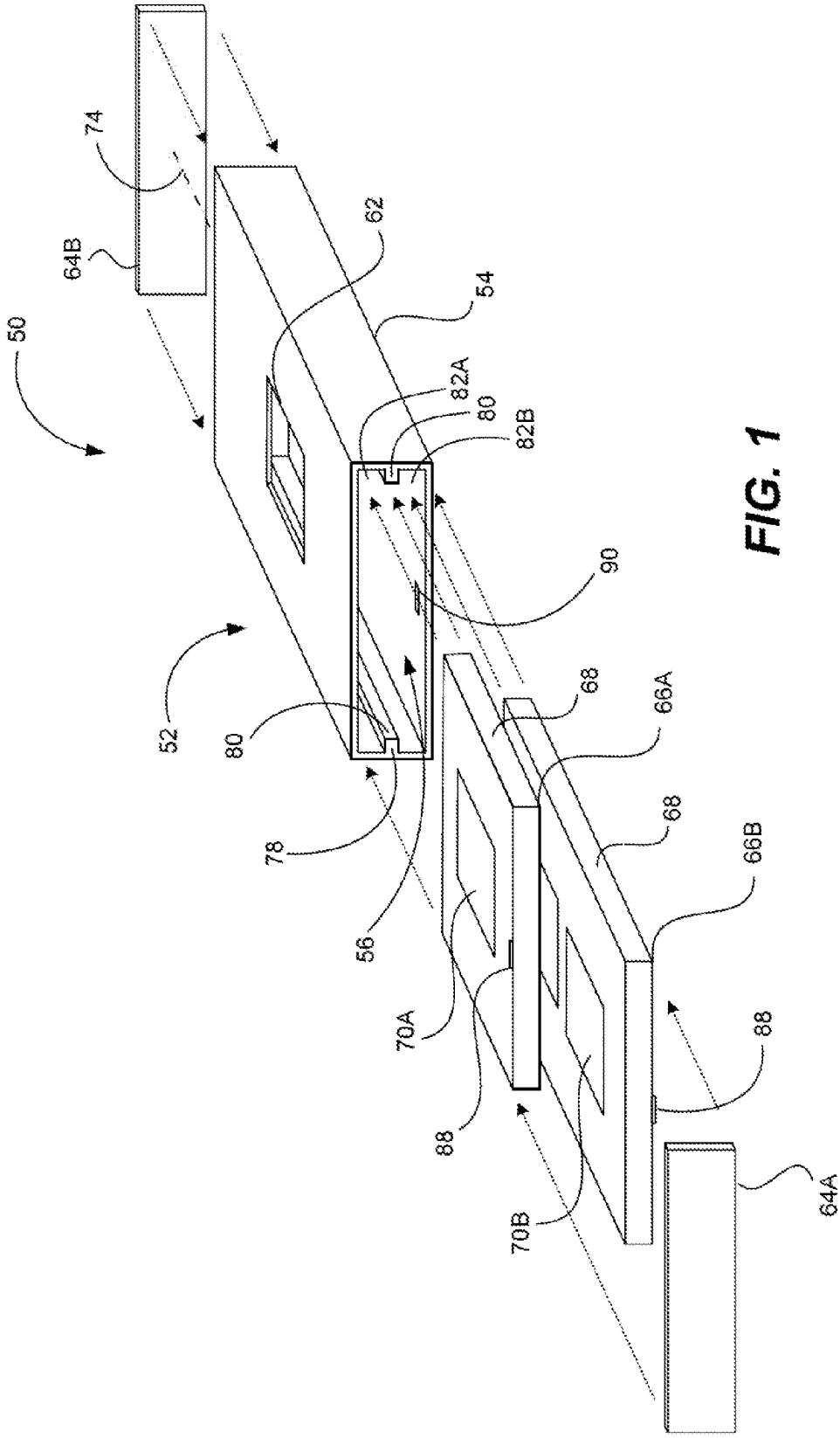
50
52
54
56
62
64A
64B
66A
66B
68
68
70A
70B
74
78
80
80
82A
82B
88
88
90

FIG. 1

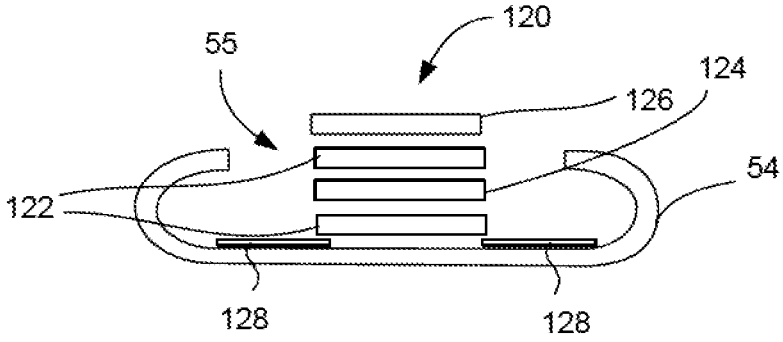

FIG. 2

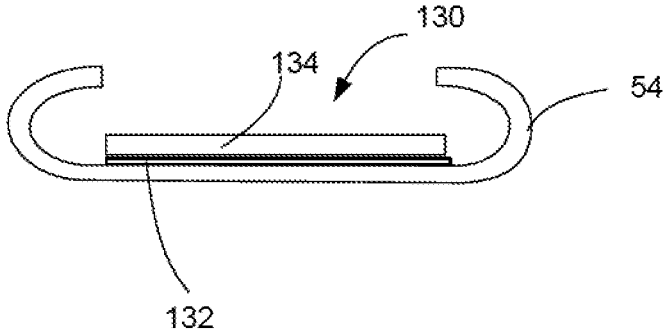

FIG. 3

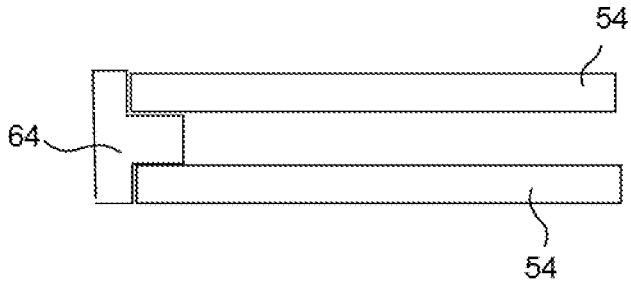

FIG. 4

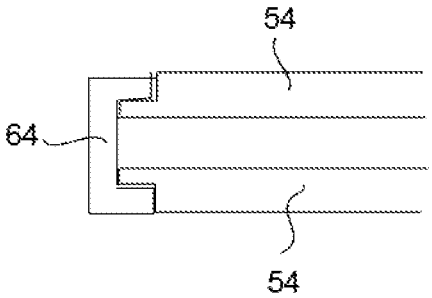

FIG. 5A

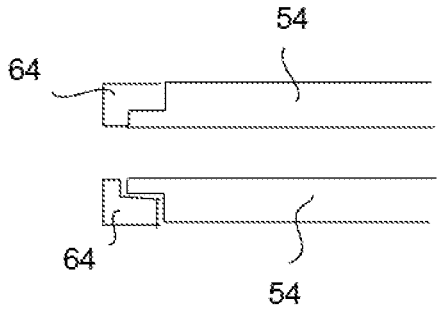

FIG. 5B

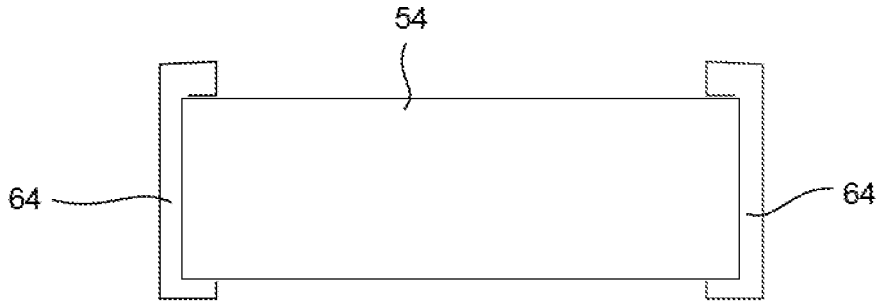

FIG. 6A

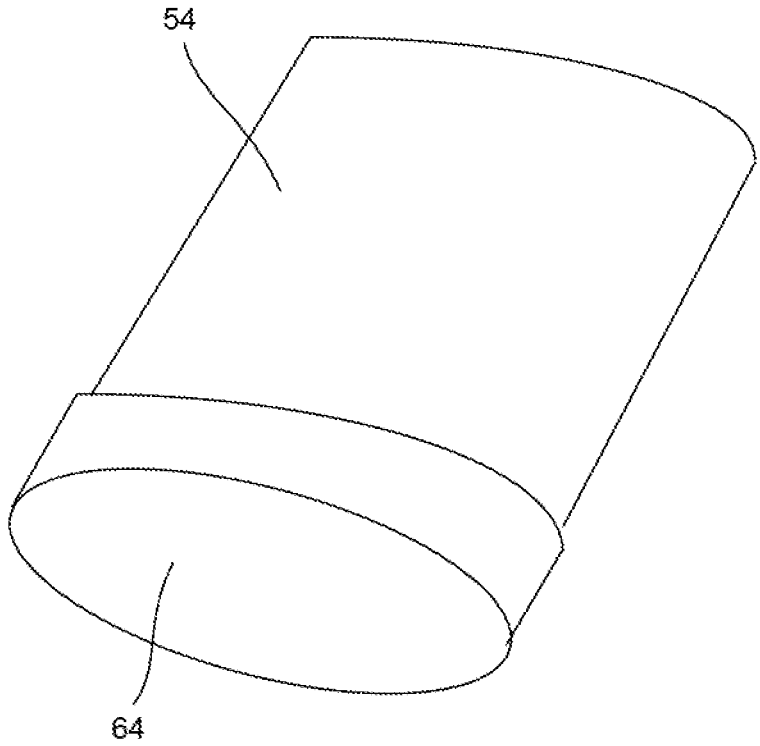

FIG. 6B

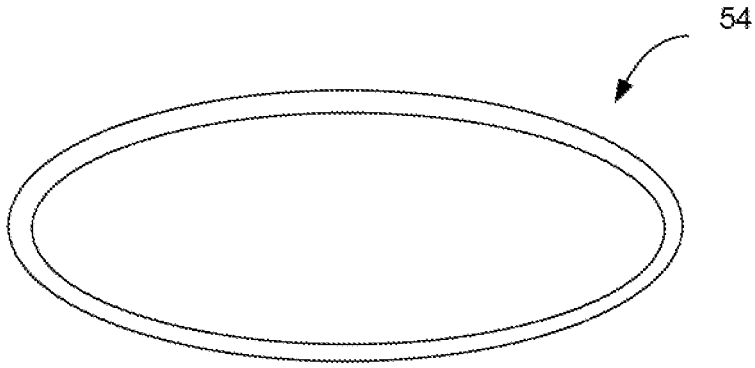

FIG. 7

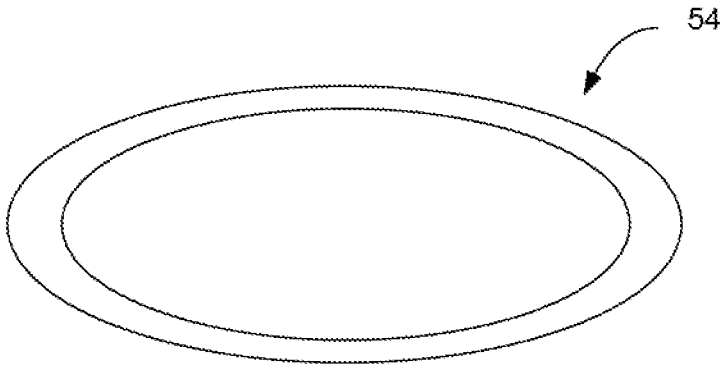

FIG. 8

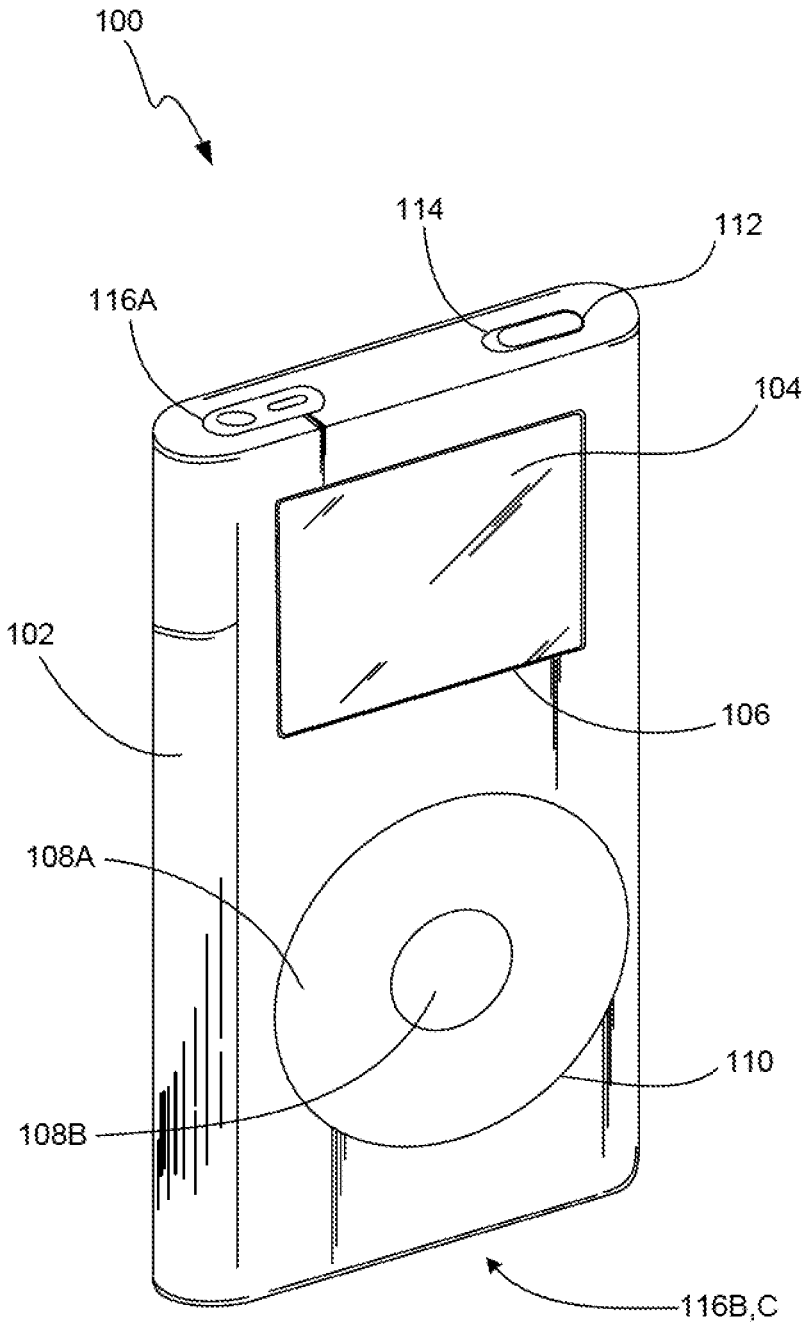

FIG. 9

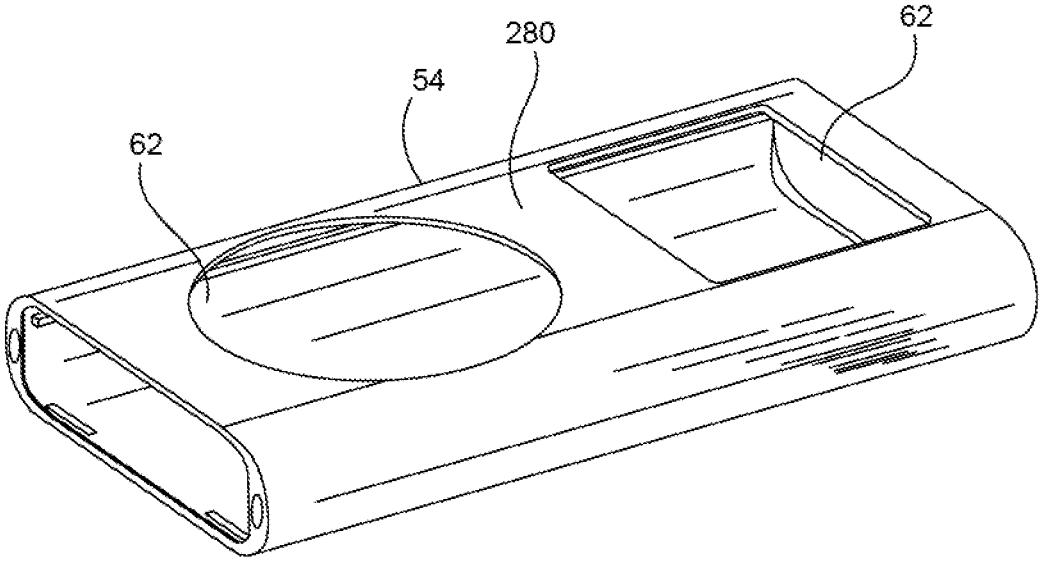

FIG. 10

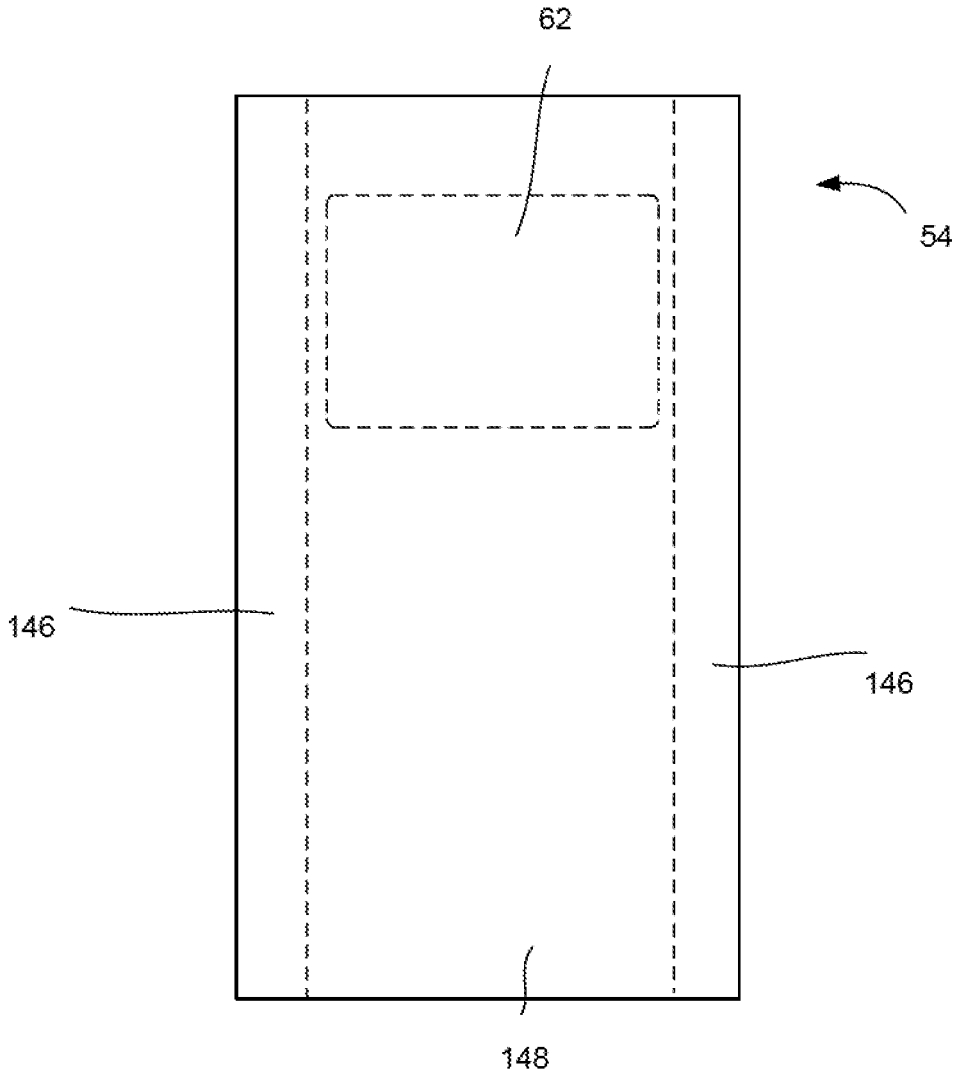

FIG. 11

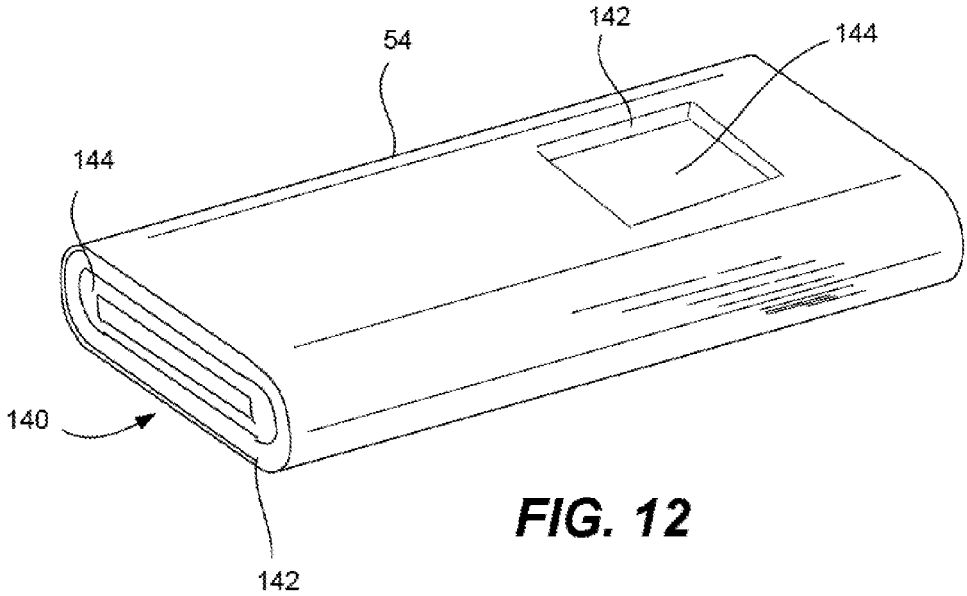

FIG. 12

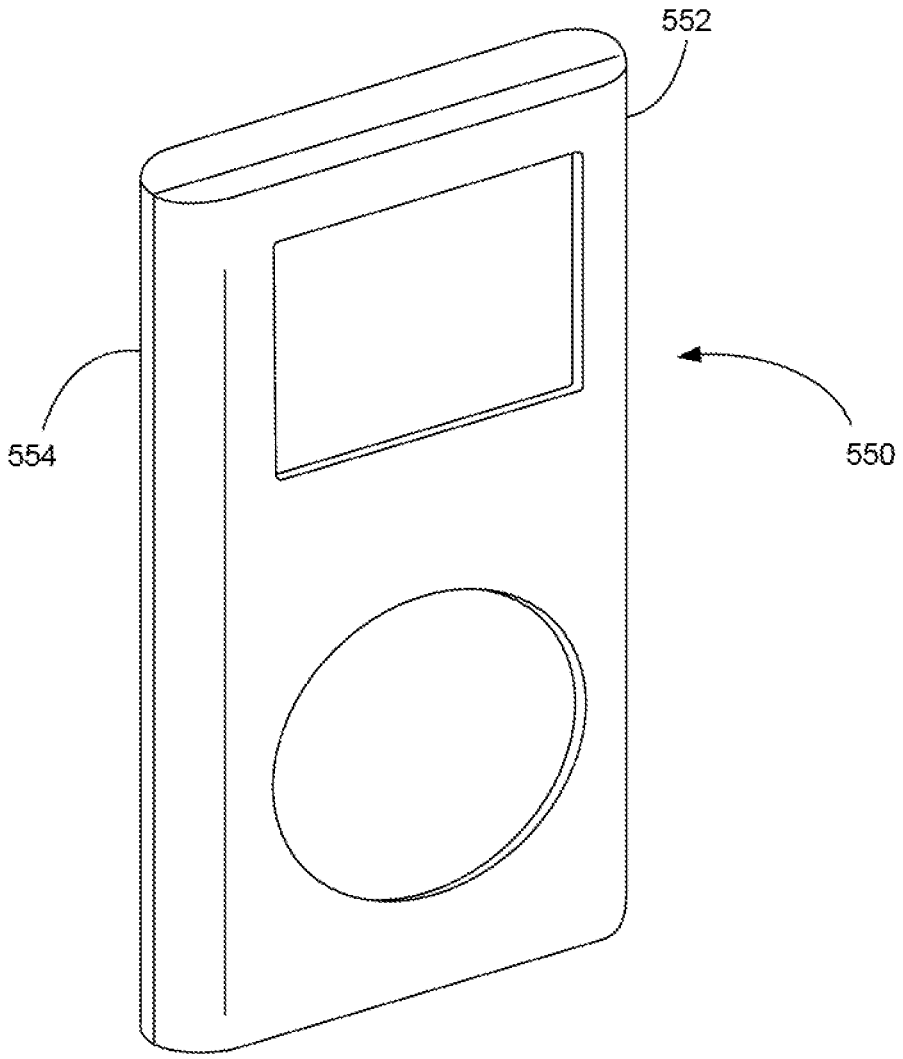

FIG. 13

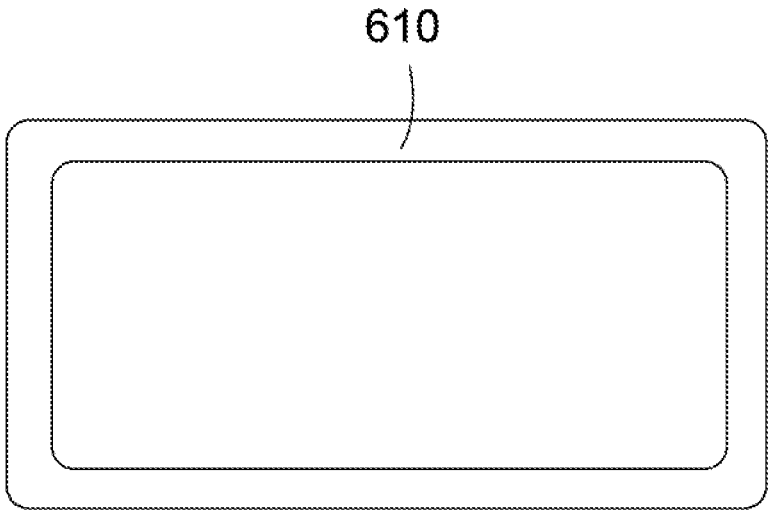

FIG. 14A

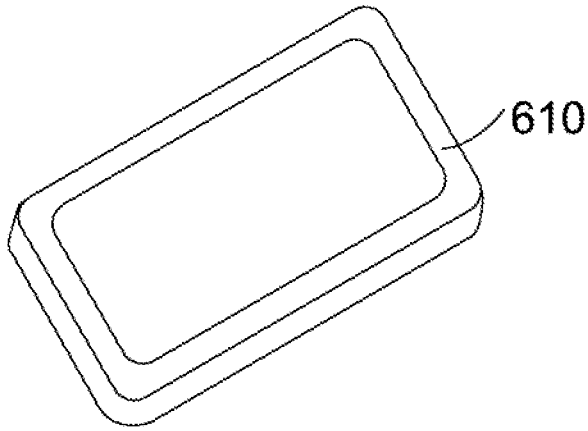

FIG. 14B

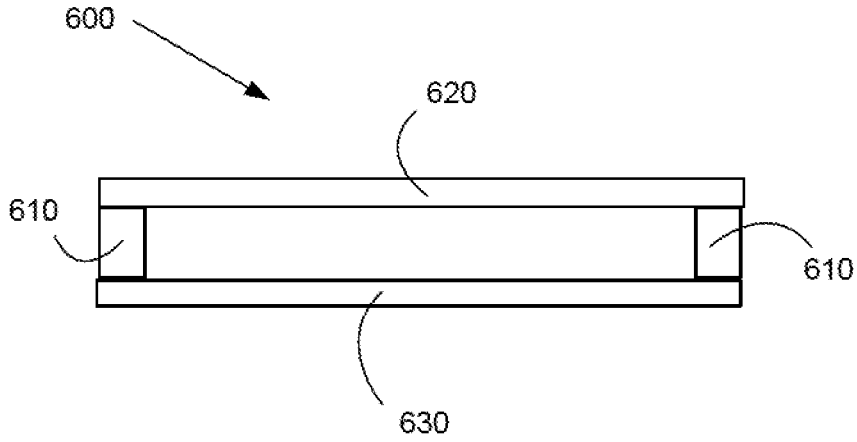

FIG. 15

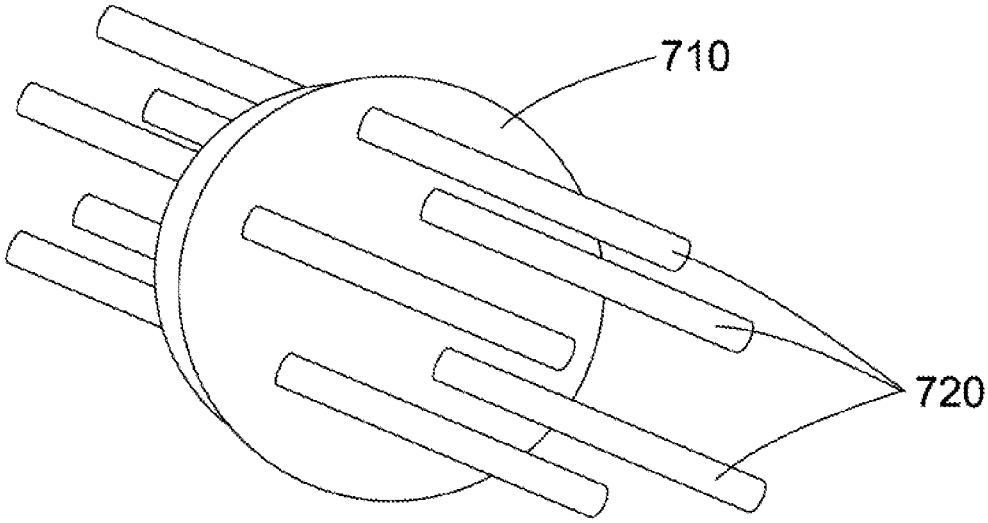

FIG. 16A

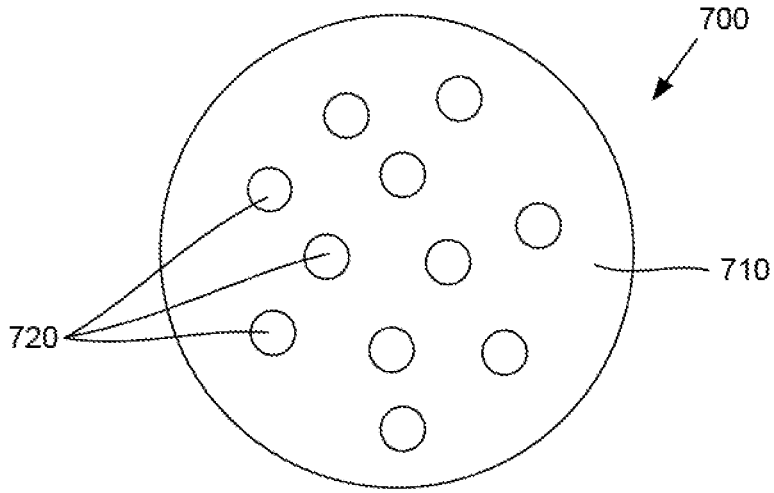

FIG. 16B

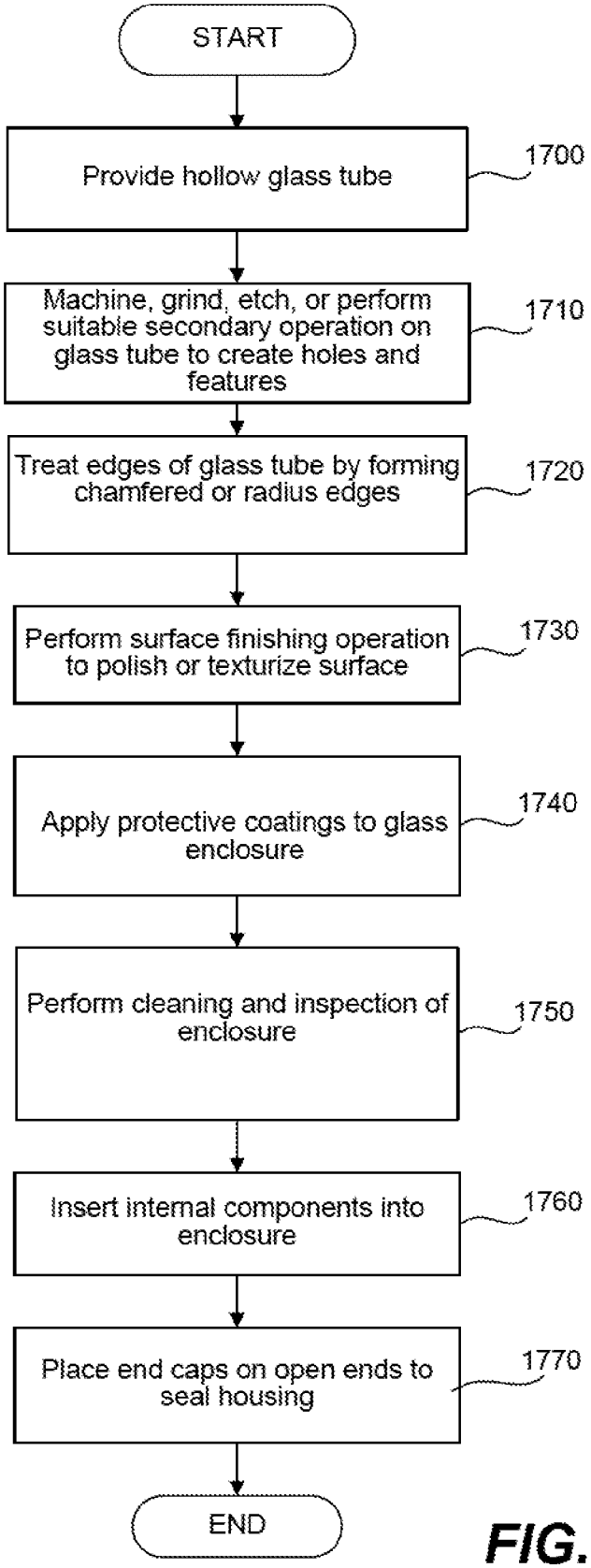
START
Provide hollow glass tube
1700
Machine, grind, etch, or perform suitable secondary operation on glass tube to create holes and features
1710
Treat edges of glass tube by forming chamfered or radius edges
1720
Perform surface finishing operation to polish or texturize surface
1730
Apply protective coatings to glass enclosure
1740
Perform cleaning and inspection of enclosure
1750
Insert internal components into enclosure
1760
Place end caps on open ends to seal housing
1770
END

FIG. 17

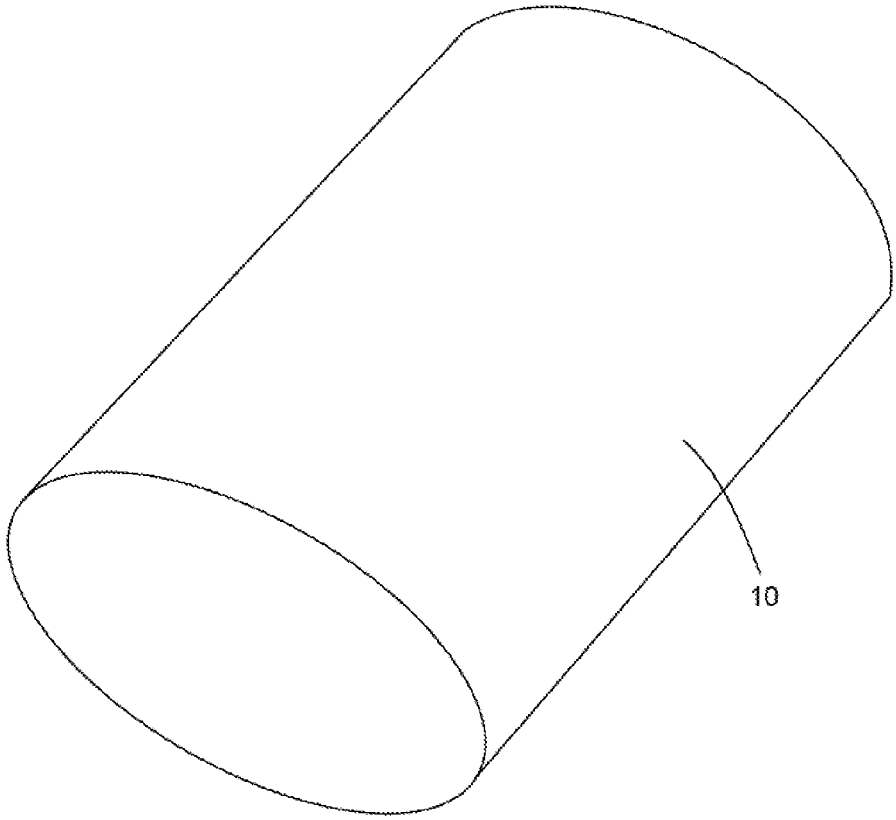

FIG. 18

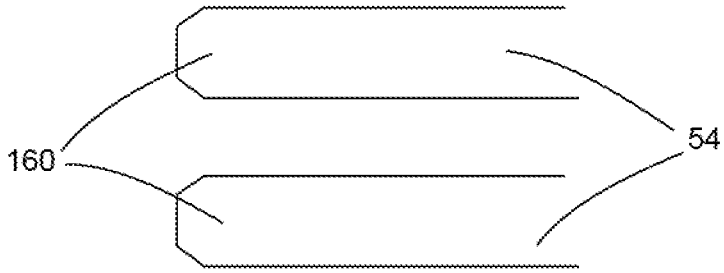

FIG. 19

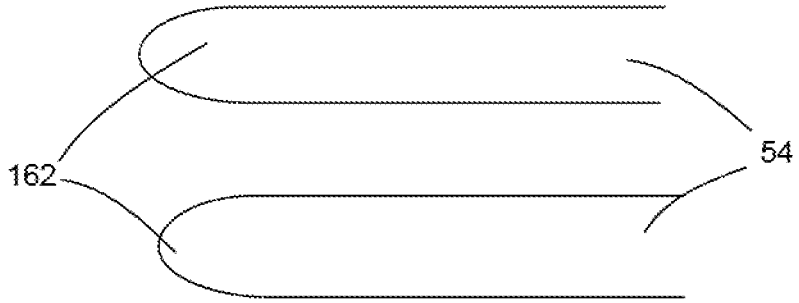

FIG. 20

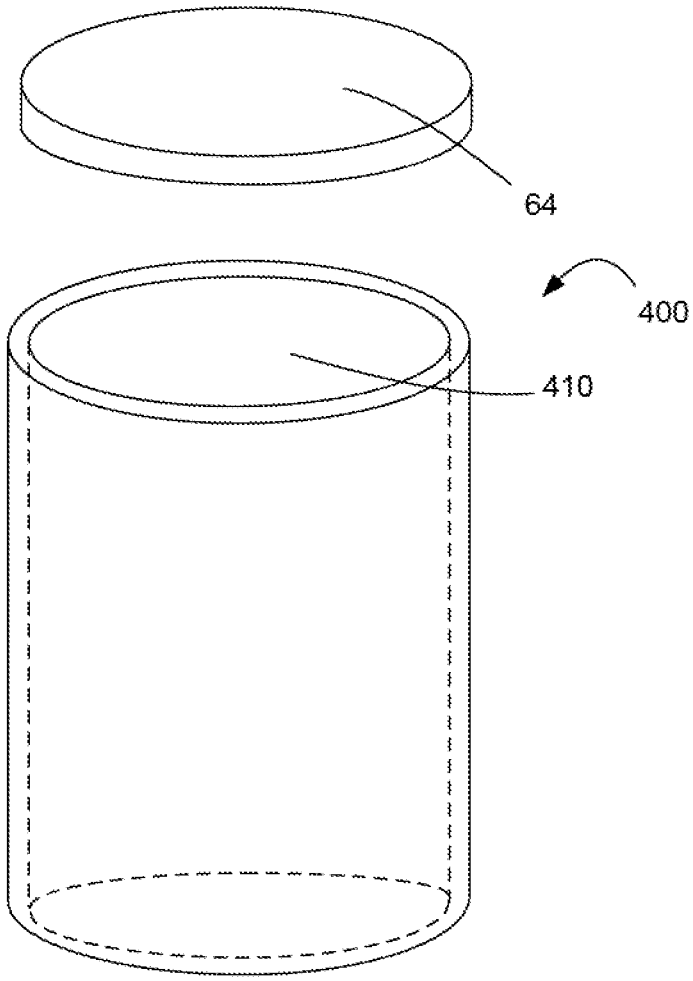

FIG. 21

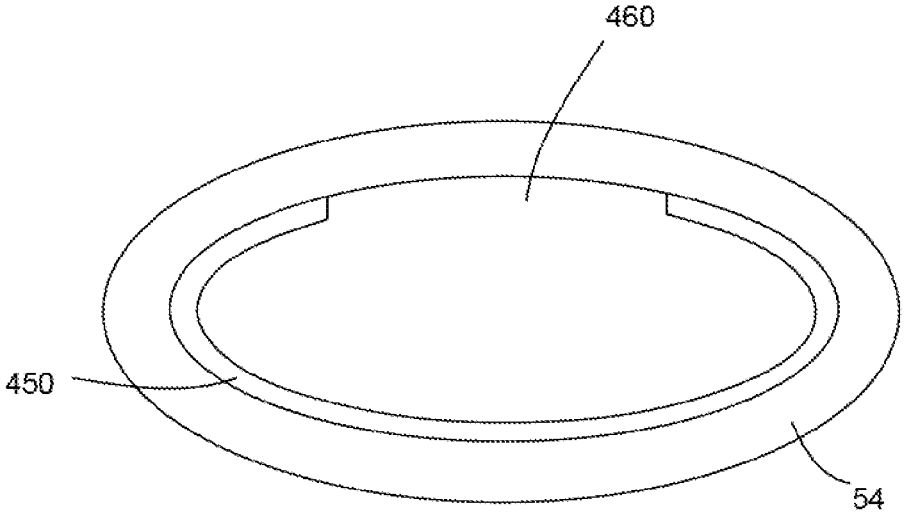

FIG. 22

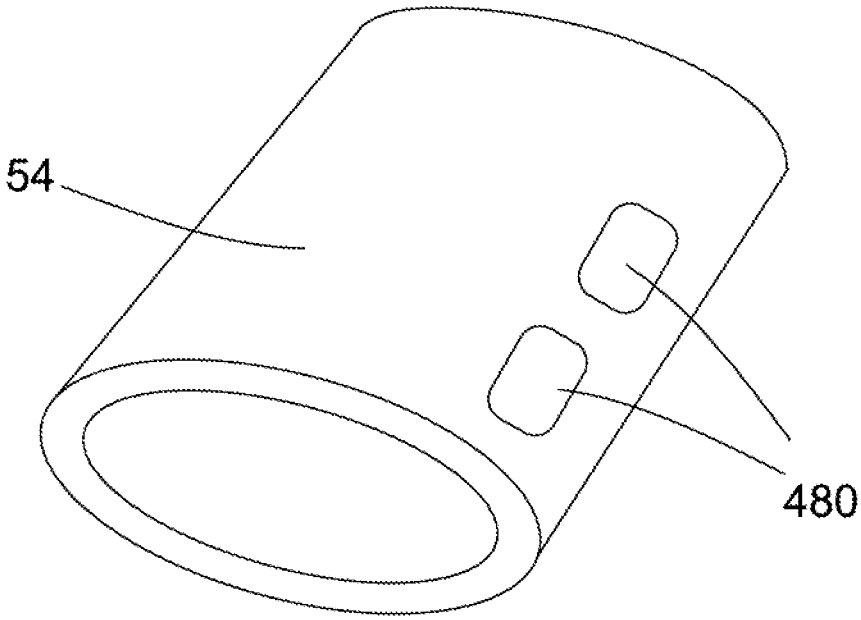

FIG. 23

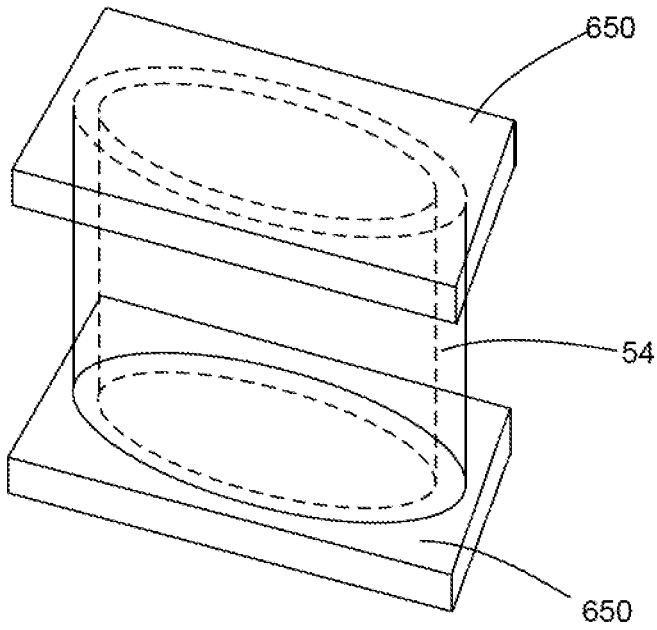

FIG. 24

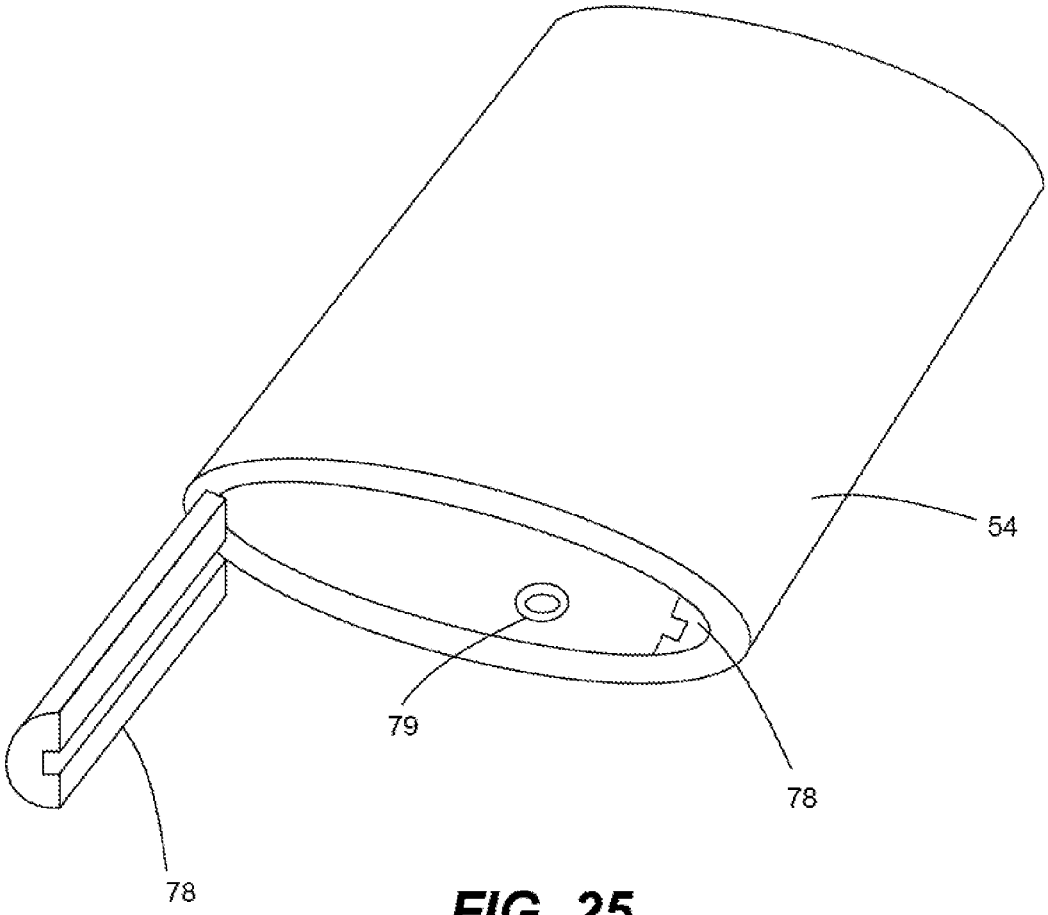

FIG. 25

GLASS ENCLOSURE

CROSS-REFERENCE TO RELATED APPLICATIONS

[0001] This application is a continuation application of U.S. application Ser. No. 14/447,507, filed Jul. 30, 2014 and entitled "GLASS ENCLOSURE," which is hereby incorporated herein by reference, which in turn is a continuation application of U.S. application Ser. No. 13/233,940, filed Sep. 15, 2011 and entitled "GLASS ENCLOSURE," which is hereby incorporated herein by reference, which in turn claims priority benefit of U.S. Provisional Application Ser. No. 61/384,211, filed Sep. 17, 2010, entitled GLASS ENCLOSURE, the entire disclosure of which is hereby incorporated herein by reference.

BACKGROUND OF THE INVENTION

[0002] Field of the Invention

[0003] The described embodiments relate generally to portable computing devices. More particularly, the present embodiments relate to enclosures of portable computing devices and methods of assembling portable computing devices.

[0004] Description of the Related Art

[0005] In recent years, portable electronic devices, such as laptop computers, tablet computers, PDAs, media players, and cellular phones, have become compact and lightweight yet powerful. As manufacturers have been able to fabricate various operational components of these devices in smaller sizes, the devices themselves have become smaller. In most cases, despite having a more compact size, such components have increased power as well as operating speed. Thus, smaller devices may have much more functionality and power than larger devices of the past.

[0006] One design challenge associated with the portable electronic devices is in techniques for mounting structures within the portable computing devices. Conventionally, the structures have been laid over one of the casings (upper or lower) and attached to one of the casings with fasteners, such as screws, bolts, and rivets. That is, the structures are positioned in a sandwich like manner in layers over the casing and thereafter fastened to the casing. Such an assembly process can be both time consuming and cumbersome.

[0007] Another design challenge is to provide an aesthetically pleasing enclosure that is functional for the intended purpose of the device. With more devices being capable of wireless communications, a radio transparent enclosure would be beneficial, as it would allow components, such as antennas, to be positioned inside the enclosure. Users also desire an enclosure that can withstand mishaps. Thus, a water-resistant and scratch-resistant enclosure would also be desirable.

[0008] Therefore, it would be beneficial to provide improved enclosures for portable computing devices, particularly enclosures that are functional and aesthetically pleasing yet durable. In addition, there is a need for improvements in the manner in which structures are mounted within the enclosures. For example, improvements that enable structures to be quickly and easily installed within the enclosure, and that help position and support the structures in the enclosure.

SUMMARY OF THE DESCRIBED EMBODIMENTS

[0009] This paper describes various embodiments that relate to systems, methods, and apparatus for providing an enclosure suitable for a portable computing device. In particular, at least portions of the enclosure can be transparent or at least translucent and as such can be formed of materials such as glass. It will be understood that the enclosure can be formed of glass but does not need to have any transparent portion. In other words, the entire glass enclosure can be opaque. In other embodiments, the glass enclosure can be fully transparent or partially transparent or translucent.

[0010] According to one embodiment, a portable computing device capable of wireless communications is described. The portable computing device includes an integral and substantially seamless enclosure that surrounds and protects the internal operational components of the portable computing device. The enclosure includes a tube like main body that is extruded in its entirety with glass material that permits wireless communications therethrough.

[0011] According to another embodiment, a portable electronic device is provided. The portable electronic device includes a substantially seamless enclosure that surrounds and protects the internal operational components of the portable electronic device. The enclosure also includes at least one structural wall formed from a glass material.

[0012] According to yet another embodiment, a method for manufacturing a portable electronic device capable of wireless communications is disclosed. The portable electronic device surrounds and protects internal operation components. The method can be carried out by the following operations: providing an integral and substantially seamless enclosure extending along a longitudinal axis, sliding at least one operational component into an internal lumen defined by the enclosure, and securing the operational component to the lumen when the operational component is in its desired position within the lumen. The enclosure includes a structural wall defining a shape or form of the portable electronic device and is formed from a glass material that permits wireless communications therethrough.

[0013] Other aspects and advantages of the invention will become apparent from the following detailed description taken in conjunction with the accompanying drawings which illustrate, by way of example, the principles of the invention.

BRIEF DESCRIPTION OF THE DRAWINGS

[0014] The invention will be readily understood by the following detailed description in conjunction with the accompanying drawings, wherein like reference numerals designate like structural elements, and in which:

[0015] FIG. **1** is an exploded perspective diagram of an electronic device, in accordance with one embodiment.

[0016] FIG. **2** is an exploded side view of a touch screen display assembly in a glass enclosure.

[0017] FIG. **3** is a side view of a LCD display integrated with a glass enclosure.

[0018] FIGS. **4**, **5**A, **5**B, **6**A and **6**B show various embodiments of end caps for a glass enclosure.

[0019] FIG. **7** is a side cross-sectional view of a glass enclosure having a wall with a continuous uniform thickness all around.

[0020] FIG. **8** is a side cross-sectional view of a glass enclosure having a wall with a thicker wall portion at the edge or corner portions.

[0021] FIG. **9** is a perspective diagram of a handheld computing device, in accordance with one embodiment.

[0022] FIG. **10** is a front perspective view of a glass seamless enclosure, in accordance with one embodiment.

[0023] FIG. **11** is a top plan view of a glass enclosure co-extruded with both an opaque material and a transparent material, in accordance with one embodiment.

[0024] FIG. **12** is a perspective view of a two-layer clad glass enclosure.

[0025] FIG. **13** is a front perspective view of an embodiment of an electronic device having an enclosure formed from two glass members bonded together.

[0026] FIGS. **14**A and **14**B are a top plan view and perspective view of a glass band, respectively.

[0027] FIG. **15** is a side cross-sectional view of a glass enclosure with two flat pieces of glass bonded to the glass band shown in FIG. **14**.

[0028] FIG. **16**A is a perspective view of a ceramic disk formed around several metal rods for forming a water-resistant audio jack in accordance with an embodiment.

[0029] FIG. **16**B is a top plan view of the water-resistant audio jack shown in FIG. **16**A.

[0030] FIG. **17** is a method of manufacturing an electronic device with a glass enclosure, in accordance with one embodiment.

[0031] FIG. **18** is a perspective view of a solid block of glass prior to being formed into a glass enclosure.

[0032] FIGS. **19** and **20** are side view showing chamfered edges and radius edges of an embodiment of a glass enclosure.

[0033] FIG. **21** is a perspective view of an embodiment of a glass enclosure made by a deep drawn blow molding process.

[0034] FIG. **22** is a side cross-sectional view of a glass main body with ink printing or back printing to achieve opacity around a display.

[0035] FIG. **23** is a perspective view of an embodiment of a glass main body having textured portions for use as light indicators.

[0036] FIG. **24** is a perspective view of a method of sealing of the interior of a glass enclosure to achieve a thicker surface layer in compression in a chemical strengthening process in accordance with an embodiment.

[0037] FIG. **25** shows an embodiment of a main body with rails that are adhered to and a screw boss molded into the main body.

DETAILED DESCRIPTION OF SELECTED EMBODIMENTS

[0038] Reference will now be made in detail to representative embodiments illustrated in the accompanying drawings. It should be understood that the following descriptions are not intended to limit the embodiments to one preferred embodiment. To the contrary, it is intended to cover alternatives, modifications, and equivalents as may be included within the spirit and scope of the described embodiments as defined by the appended claims. It should be noted that issued U.S. Pat. No. 7,515,431 "Handheld Computing Device" filed Jul. 2, 2004 by Zadesky et. al., and issued U.S. Pat. No. 7,724,532 "Handheld Computing Device" filed Aug. 7, 2006 by Zadesky et. al., (CIP of '431 patent) are both hereby incorporated by reference in their entireties for all purposes.

[0039] FIG. **1** is an exploded perspective diagram of an electronic device **50**, in accordance with one embodiment. The device **50** may be sized for one-handed operation and placement into small areas, such as a pocket. In other words, the device **50** can be a handheld pocket-sized electronic device. By way of example, the electronic device **50** may correspond to a computer, media device, telecommunication device, and the like.

[0040] The device **50** includes a housing **52** that encloses and supports internally various electrical components (including, for example, integrated circuit chips and other circuitry) to provide computing operations for the device **50**. The housing **52** can also define the shape or form of the device **50**. That is, the contour of the housing **52** may embody the outward physical appearance of the device **50**. It should be noted that, although the device **50** is illustrated in FIG. **1** with 90 degree edges, it will be understood that the device **50** can have rounded or chamfered edges.

[0041] The housing **52** generally includes a main body **54** in the form of an integral tube. By integral, it is meant that the main body is a single complete unit. By being integrally formed, the main body is structurally stiffer than conventional housings, which typically include two parts that are fastened together. Furthermore, unlike conventional housings that have a seam between the two parts, the main body has a substantially seamless appearance. Moreover, the seamless housing prevents contamination and is more water resistant than conventional housings.

[0042] Because of the tube like configuration, the main body **54** can define a cavity **56** therethrough between two open ends. In some embodiments, the main body **54** has only one open end. The main body **54** can also include one or more windows **62**, which provide access to the electrical components, particularly the user interface elements, when they are assembled inside the cavity **56** of the main body **54**.

[0043] The main body **54** may be formed from a variety of materials or material combinations including, but not limited to, glass, metals, metal alloys, plastics, ceramics and the like. In a particular embodiment, the main body is formed of glass.

[0044] The material selected generally depends on many factors including, but not limited to, strength (tensile), density (lightweight), strength to weight ratio, Young's modulus, corrosion resistance, formability, finishing, recyclability, tooling costs, design flexibility, manufacturing costs, manufacturing throughput, reproducibility, and the like. The material selected may also depend on electrical conductivity, thermal conductivity, radio wave transparency, combustibility, toxicity, and the like. The material selected may also depend on aesthetics, including color, surface finish, and weight.

[0045] In one particular embodiment, the main body **54**, with or without internal rails **80**, is formed from a glass tube. The glass tube may be formed from an extrusion or extrusion-like process. Some of the reasons for using glass over other materials are that glass is strong, stiff, and radio transparent and therefore a suitable material for an enclosure of an electronic device capable of wireless communications. The radio transparency is especially important for wireless hand held devices that include antennas internal to the enclosure. Radio transparency allows the wireless signals to

pass through the enclosure and, in some cases, even enhances these transmissions. It will be understood that, although a glass enclosure is capable of wireless communications, the embodiments described herein need not be capable of wireless communication.

[0046] A glass enclosure can also provide the portable electronic device with a unique, aesthetically pleasing appearance. To further provide an aesthetically pleasing appearance, the glass can also be coated with an oleophobic coating to reduce finger prints and smudging on the glass. The glass can also be coated with an anti-reflective coating to reduce glare. It will be understood that chemically strengthened glass can also be scratch resistant. The glass can also be color tinted in a wide variety of colors and can also have a variety of surface finishes including smooth and rough. For example, the glass can be polished to create a smooth (gloss) finish, or a blasting operation can performed to create a rough or textured (matte) finish. Portions **480** of the glass can also be textured so that the textured surface will disperse light and can be used as light indicator, as shown in FIG. **23**.

[0047] As discussed in more detail below, the glass material can be formed so that the enclosure can have a seamless or substantially seamless appearance. The seamless enclosure, in addition to being aesthetically pleasing, can provide the added benefit of less contamination and moisture intrusion into the interior of the device.

[0048] It should be noted that glass has been used in a wide variety of products, including electronic devices, such as watches, and phones. In these cases, however, the glass materials have not been used as structural components. In most of these cases, the glass materials have been used as cosmetic accoutrements or solely as a screen for a display. It is believed that, up until now, glass materials have never been used as a structural element providing substantially all of the structural frames, walls and main body of a consumer electronic device, and more particularly an enclosure of a portable electronic device, such as a media player or mobile phone.

[0049] The glass enclosure also allows a display screen to be positioned underneath and protected by the glass enclosure. The glass material of the enclosure is capable of capacitive sensing so that a touch screen can be used through the glass enclosure. An embodiment of a touch screen display in a glass enclosure **54** is illustrated in FIG. **2**, which is an exploded side view of the glass enclosure **54** with a liquid crystal display (LCD) touch screen assembly **120**. According to this embodiment, the glass enclosure **54** can have an opening **55** on its rear face opposite the face with the display. In this embodiment, the entire touch screen display assembly **120** can be inserted through the opening **55** and into the enclosure. As shown in FIG. **2**, the touch screen display assembly **120** includes a double indium tin oxide (DITO) **124** layer sandwiched between two optically clear adhesive (OCA) layers **122**, and a LCD **126** over one of the OCA layers **122**. The top OCA layer **122** can adhere the DITO layer **124** to the LCD **126**. The bottom OCA layer **122** can adhere the touch screen display assembly **120** to the glass enclosure **54**. By adhering the touch screen display assembly **120** directly to the glass enclosure **54**, the cover glass of a conventional touch screen display assembly can be eliminated and the device can therefore be thinner as well as more aesthetically pleasing with a seamless enclosure. In this embodiment, the housing can be sealed with a door or a cap formed of glass or any other suitable material, including metal, plastic, and ceramic.

[0050] The glass enclosure around the display can be made opaque so the operational components of the device are not visible. One method of making the glass opaque is to use ink printing **128** in the areas where opacity is desired, as shown in FIG. **2**. A mask can be used to mask off the display area. Alternatively, the opacity can be painted or screen printed. Other techniques for achieving opacity in certain areas, such as using a two-layer clad glass, can be used, as will be described in more detail below.

[0051] According to another embodiment shown in FIG. **3**, a LCD **130** can be integrated with the glass enclosure **54**. In this embodiment, a color filter panel **132** may be positioned between a thin film transistor (TFT) glass **134** and the glass enclosure **54** to form the LCD **130**. A conventional LCD has a color filter panel sandwiched between two TFT glass layers. In this embodiment, the glass enclosure **54** is used in place of one of the TFT glass layers. This embodiment therefore allows the device to be thinner, as one less piece of TFT glass is used. It will be understood, that although the embodiment illustrated in FIG. **3** shows an opening in the enclosure **54**, this embodiment of the LCD can be employed in any of the embodiments of glass enclosures described herein.

[0052] In order to seal the main body **54**, the housing **52** can additionally include a pair of end caps or plugs **64**A and **64**B. Each of the end caps or plugs **64** is configured to cover one of the open ends of the main body **54**, thereby forming a fully enclosed housing system. In some embodiments, the end caps **64** can be formed of materials, such as plastic, metal, and ceramic. The end caps **64** also serve as protection for the edges of the glass main body **54**, as will be explained in more detail below.

[0053] As noted above, it is desirable for an enclosure to be durable. A piece of glass typically breaks due to an exposed edge. For glass materials, crisp, 90 degree edges and corners are prone to failure. Crisp edges can easily be chipped off and become an origin for crack propagation. Thus, it is important to treat the edges of the glass. The edges can be machined or buffed to make an edge chamfer **160** (as shown in FIG. **19**) or an edge radius **162** to round out the edges (as shown in FIG. **20**). In addition, the edges can be coated with a protective material. In some embodiments, the exposed ends of the glass enclosure can be covered by applying protective coatings, such as plated metal using metallization or PVD plate metal. Alternatively, polymer coatings can be applied over the exposed glass edges. The end caps **64** can also provide further protection for the glass edges.

[0054] Furthermore, the end caps **64** may be attached to the main body **54** using a variety of techniques, including but not limited to, fasteners, glues, snaps, and the like. In some cases, the end caps **64** may be positioned on the surface of the open ends. If so, they typically have the same shape as the outer periphery of the main body **54**. In order to eliminate gaps, cracks or breaks on the front and side surfaces, the end caps **64** may alternatively be placed inside the cavity **56** at each of the ends. In this arrangement, the outer periphery of the end cap **64** generally matches the inner periphery of the main body **54**. This implementation is typically preferred in order to form a housing **52** with a uniform and seamless appearance, i.e., no breaks when looking directly at the front, back or side of the housing.

[0055] FIGS. **4**, **5**A, **5**B, **6**A and **6**B illustrate additional embodiments of end caps **64** for the glass main body **54**. The end caps **65** can cover the open ends of the main body **54** in order to provide a fully contained housing **52**. Although the end caps **64** can be applied in a variety or ways, in the particular embodiment shown in FIG. **4**, the end caps **64** have a shape that coincides with the internal shape of the main body **54** such that a portion of the end caps **64** may be inserted into the open ends. In FIG. **5**B, the end caps **64** do not fully cover the open ends, but do provide protection to the edge of the main body **54**. In the embodiment shown in FIG. **5**B, a feature, such as a door, can be used to fully cover an open end of the main body **54**. FIG. **6**B is a perspective view of an end cap **64** shown in the side view of FIG. **6**A.

[0056] The cross-sectional shape, including both the outer and inner shapes, of the main body **54** may be widely varied. They may be formed from simple or intricate shapes, whether rectilinear and/or curvilinear. For hand held devices, it is typically preferred to use a shape that better fits the hand (e.g., form fits). By way of example, a rectangle with curved edges or an oval or pill shaped cross section having curvature that more easily receives the hand may be used. It should be noted that the inner cross-sectional shape may be the same or different from the external cross sectional shape of the main body. For example, it may be desirable to have a pill shaped external and a rectangular shaped interior, etc. In addition, although not a requirement, the front surface of the main body **54** may be substantially planar for placement of the user interface of the device **50**.

[0057] In some embodiments, the main body **54** can have a wall having a continuous uniform thickness all around, as shown in FIG. **7**. In other embodiments, as shown in FIG. **8**, the wall of the main body **54** can be thicker at the edge or corner portions to provide strength in the areas where strength is more needed.

[0058] The seamless main body **54** can extend along a longitudinal axis, and can include an internal lumen that is sized and dimension for receipt of the internal components of the device **50** through an open end of the main body **54**. The device **50** can also include one or more electronic subassemblies. The subassemblies can each include a carrier **68** and one or more operational components **70** of the electronic device **50**. The carrier **68** can provide a structure for carrying the operational components **70** and supporting them when assembled inside the housing **52**. By way of example, the carrier **68** may be formed from plastics, metals, or a printed circuit board (PCB). The operational components **70**, on the other hand, perform operations associated with the computing device **50**. The operational components **70** may, for example, include components such as user interface elements **70**A and circuit elements **70**B. The user interface elements **70**A allow a user to interact with the computing device **50**. By way of example, the user interface elements **70**A may correspond to a display or an input device, such as a keypad, touch pad, touch screen, joystick, trackball, buttons, switches and the like. The circuit components **70**B, on the other hand, perform operations, such as computing operations for the computing device **50**. By way of example, the computing components **70**B may include a microprocessor, memory, hard drive, battery, I/O connectors, switches, power connectors, and the like.

[0059] During assembly, the subassemblies are positioned inside the cavity **56** of the main body **54**. In particular, the subassemblies can be inserted into an open end of the main body **54** mainly along a longitudinal axis **74** of the main body **54** to their desired position within the housing **52**. Once the subassemblies are positioned inside the cavity **56**, the end caps **64** of the housing **52** may be attached to the main body **54** in order to fully enclose the housing **52** around the subassemblies. In most cases, the user interface elements **70**A are positioned relative to the window opening **62** so that a user may utilize the user interface elements **70**A. By way of example, the window **62** may allow viewing access to a display or finger access to a touch pad or button. However, as discussed above, the glass main body **54** is capable of capacitive sensing, so a touch screen or a touch pad could be positioned underneath the glass enclosure without a window opening **62**.

[0060] In order to more efficiently assemble the electronic subassemblies **66** inside the cavity **56**, the device **50** may include an internal rail system **78** disposed inside the cavity **56** of the main body **54**. In most cases, the internal rail system **78** is integrally formed with the main body **54**, i.e., formed as a single part. In some embodiments, as shown in FIG. **25**, the rail system **78** can be adhered to the main body **54**. Features, such the internal rails **78** and screw bosses **79**, for mounting subassemblies can be adhered or molded into the main body **54**.

[0061] The internal rail system **78** is configured to receive the various subassemblies and guide them to their desired position within the main body **54** when the subassemblies are inserted through one of the open ends. The internal rail system **78** enables the subassemblies to be easily and quickly assembled within the device **50**. For example, the rail system **78** provides for insertion (or removal) with minimal effort and without tools. The internal rail system **78** also helps support and store the subassemblies in an organized manner within the device **50**. By way of example, the rail system **78** may store the subassemblies in a stacked parallel arrangement thereby using available space more efficiently.

[0062] In the illustrated embodiment, the rail system **78** includes at least one set of opposed rails **80**, each of which extends longitudinally through the cavity **56** and each of which protrudes from the inner sides of the main body **54**. The rails **80** are configured to receive the subassemblies and cooperate to guide subassemblies to their desired position within the housing **52**. The internal rails **80** generally allow the subassemblies to be slid into the cavity **56** through an open end following the longitudinal axis **74** of the main body **54**. That is, the subassemblies are capable of sliding in and out of the housing **52** along one or more surfaces of the rails **80**.

[0063] The portion of the subassemblies that engages the rails **80** may be a surface of the subassemblies or alternatively one or more posts or mounts that extend outwardly from the subassemblies. Furthermore, the reference surfaces for the opposed rails **80** may be positioned in the same plane or they may be positioned in different planes. The configuration generally depends on the configuration of the subassemblies. By way of example, in some cases, the subassemblies may have a cross section that is stepped rather than completely planar. In cases such as these, the opposed rails **80** have references surfaces in different planes in order to coincide with the stepped cross section. Moreover, although typically continuous between the ends, each of the rails **80**

may be segmented or include removed portions as for example at the ends for placement of the flush mounted end caps.

[0064] The width of the rails **80** may be widely varied. For example, they may be one integral piece that extends entirely from one side to the other, or they may be separate pieces with a gap located therebetween (as shown). The position and cross sectional dimensions and shapes of each of the rails may also be widely varied. The size and shape as well as the position of the rails **80** generally depend on the configuration of the subassemblies. The rails **80** may have the same shape and size or they may have different shape and size. In most cases, the size and shape is a balance between keeping them as small as possible (for weight and space requirements) while providing the required reference surface and ample support to the subassemblies.

[0065] To elaborate, the rails **80** define one or more channels **82** that receive the one or more subassemblies. In the illustrated embodiment, the rails **80** along with the main body **54** define a pair of channels, particularly an upper channel **82**A and a lower channel **82**B. The upper channel **82**A receives a first subassembly **66**A and the lower channel **82**B receives a second subassembly **66**B. It should be noted, however, that this is not a limitation and that additional sets of rails **80** may be used to produce additional channels **82**. It should also be noted that although only one subassembly is shown for each channel **82**, this is not a requirement and that more than one subassembly may be inserted into the same channel **82**. Moreover, it should be noted that the subassemblies are not limited to being fully contained with a single channel and that portions of a subassembly may be positioned in multiple channels. For example, the second subassembly **66**B, which is positioned in the lower channel **82**B, may include a protruding portion that is positioned through the rails **80** and into the upper channel **82**A.

[0066] The channels **82** generally include an entry point and a final point. The entry point represents the area of the channel **82** that initially receives the subassemblies **66**, i.e., the area proximate the ends of the main body **54**. The final point, on the other hand, represents the area of the channel **82** that prevents further sliding movement. The final point may, for example, set the final mount position of the subassemblies **66** within the housing **52**. The final point may, for example, correspond to an abutment stop. The abutment stop may be integral with the main body **54** or a separate component. By way of example, the abutment stop may correspond to one more posts that are mounted inside the cavity **56** on the inside surface of the main body **54** at a predetermined distance along the longitudinal axis **74**.

[0067] In order to prevent the subassemblies **66** from sliding once assembled, the interface between the subassemblies **66** and housing **52** may include a locking or securing mechanism. The locking mechanism generally consists of two parts, including a housing side locking feature and a subassembly side locking feature that are cooperatively positioned so that when the subassembly **66** is inserted into the housing **52**, the locking features engage with one another thus holding the subassembly **66** in its desired position within the housing **52**. In most cases, the locking features are configured to provide quick and easy assembly of the subassembly into the housing without the use of tools. The locking features may correspond to snaps, friction couplings, detents, flexures and/or the like. Alternatively or additionally, the subassemblies **66** may be attached to the main body **54** with fasteners or adhesives. In other embodiments, the operational components **70** can be directly secured to the main body **54**.

[0068] In the illustrated embodiment, the locking features of the subassemblies **66** each include a flexure tab **88** that engages a recess **90** located on an inner surface of the main body **54**. When the subassembly **66** is slid into the housing **52**, the tab **88** snaps into the recess **90** thereby securing the subassembly **66** at a predetermined position along the longitudinal axis **74**. That is, because the tabs **88** flex, they allow the subassemblies **66** to pass when pushed into the cavity **76**. When the subassemblies **66** pass over the recess **90**, the tabs **88** resume their natural position thereby trapping the subassemblies **66** in the channel **82** between the locking tab/recess **88**/**90** and the abutment stop at the end of the channel **82**. Using this arrangement, the subassemblies **66** are prevented from sliding out of the channels **82** on their own. In order to remove the subassembly **66**, a user simply lifts the tab **88** away from the recess **90** while pulling on the subassembly **66**. The recess **90** and abutment stop may cooperate to set the final position of the subassembly **66** in the cavity **56** of the main body **54**. For example, the recess and abutment stop may be configured to position the user interface elements **70**A directly behind the window opening **62** so that a user has full access to the user interface elements **70**A.

[0069] In accordance with one embodiment, the main body **54**, which may include the internal rails **80** (or other internal features), is formed via an extrusion or extrusion-like process. The process is capable of producing an integral tube without seams, crack, breaks, and the like. As is generally well known, extrusion of conventional materials, such as metals and plastics, is a shaping process where a continuous work piece (i.e., a solid block of glass **10** as shown in FIG. **18**) is produced by forcing molten or hot material through a shaped orifice. The extrusion process produces a length of a particular cross sectional shape. The cross-sectional shape of the continuous or length of the extruded work piece is controlled at least in part on the shaped orifice. As the shaped work piece exits the orifice, it is cooled and thereafter cut to a desired length.

[0070] FIG. **9** is a perspective view of a handheld computing device **100**, in accordance with one embodiment. By way of example, the computing device **100** may generally correspond to the device **50** shown and described in FIG. **1**. The computing device **100** is capable of processing data and more particularly media, such as audio, video, images, and the like. By way of example, the computing device **100** may generally correspond to a music player, game player, video player, camera, cell phone, personal digital assistant (PDA), and the like. With regard to being handheld, the computing device **100** can be operated solely by the user's hand(s), i.e., no reference surface, such as a desktop, is needed. In some cases, the handheld device is sized for placement into a pocket of the user. By being pocket sized, the user does not have to directly carry the device and therefore the device can be taken almost anywhere the user travels (e.g., the user is not limited by carrying a large, bulky and heavy device). In the illustrated embodiment, the computing device **100** is a pocket-sized hand held music player that allows a user to store a large collection of music. By way of example, the music player may correspond to the iPod series MP3 players, including for example the iPod Mini™ and iPod Nano™ manufactured by Apple Inc. of Cupertino, Calif.

[0071] As shown, the computing device **100** includes a housing **102**, which can be formed of glass, which encloses and supports internally various electrical components (including integrated circuit chips and other circuitry) to provide computing operations for the device. The integrated circuit chips and other circuitry may include a microprocessor, hard drive, Read-Only Memory (ROM), Random-Access Memory (RAM), a battery, a circuit board, and various input/output (I/O) support circuitry. In addition to the above, the housing **102** may also define the shape or form of the device **100**. In this particular illustrated embodiment, the housing **102** extends longitudinally and has a pill like cross section. The size and shape of the housing **102** is preferably dimensioned to fit comfortably within a user's hand. In one particular embodiment, the housing is formed from a glass material and has a seamless or substantially seamless look along the length of the device **100**. That is, unlike conventional housings, the housing **102**, particularly the main body, does not include any breaks between the top and bottom ends, thereby making it stiffer and more aesthetically pleasing.

[0072] The computing device **100** can also include a display screen **104**. The display screen **104**, which is assembled within the housing **102** and which can be visible through the glass housing **102** or can be positioned in a window **106**, can be used to display a graphical user interface (GUI) as well as other information to the user (e.g., text, objects, graphics). The display screen **104** can also employ touch screen technology. As noted above, the glass material of the housing **102** allows the display screen **104** to be positioned underneath and protected by the glass housing **102**. The glass material of the housing **102** is also capable of capacitive sensing so that a touch screen or touch pad can be used through the glass housing **102**.

[0073] The computing device **100** can also include one or more input devices **108** configured to transfer data from the outside world into the computing device **100**. The input devices **108** may, for example, be used to perform tracking or scrolling to make selections or to issue commands in the computing device **100**. By way of example, the input devices **108** may correspond to keypads, joysticks, touch screens, touch pads, track balls, wheels, buttons, switches, and the like. In the embodiment illustrated in FIG. **9**, the computing device **100** includes a touch pad **108**A and one or more buttons **108**B, which are assembled within the housing **102** and which are accessible through an opening **110** in the housing **102**.

[0074] The touch pad **108**A generally consists of a touchable outer surface **111** for receiving a finger for manipulation on the touch pad **100**A. Although not shown, beneath the touchable outer surface **111** is a sensor arrangement. In an embodiment, the sensor arrangement may be positioned directly underneath the glass enclosure without the touchable outer surface **111**, as the glass is capable of capacitive sensing and can act as the touchable outer surface. The sensor arrangement includes a plurality of sensors that are configured to activate as the finger passes over them. In the simplest case, an electrical signal is produced each time the finger passes a sensor. The number of signals in a given time frame may indicate location, direction, speed and acceleration of the finger on the touch pad, i.e., the more signals, the more the user moved his or her finger. In most cases, the signals are monitored by an electronic interface that converts the number, combination and frequency of the signals into location, direction, and speed and acceleration information. This information may then be used by the device **100** to perform the desired control function on the display screen **104**.

[0075] The buttons **108**B are configured to provide one or more dedicated control functions for making selections or issuing commands associated with operating the device **100**. In most cases, the button functions are implemented via a mechanical clicking action although they may also be associated with touch sensing similar to the touch pad **108**A. The position of the buttons **108**B relative to the touch pad **108**A may be widely varied. Several touch pad/button arrangements, which may be used in the device **100**, are described in greater detail in U.S. patent application Ser. Nos. 10/643,256, 10/188,182, 10/722,948, which are all hereby incorporated by reference herein in their entireties. The computing device **100** can also include one or more switches **112**, including power switches, hold switches, and the like. Like the touch pad **108**A and buttons **108**B, the switches **112** can be accessible through a second opening **114** in the housing **102**.

[0076] The device **100** may also include one or more connectors **116** for transferring data and/or power to and from the device **100**. In the illustrated embodiment, the device **100** includes an audio jack **116**A, a data port **116**B and a power port **116**C. In some cases, the data port **116**B may serve as both a data and power port thus replacing a dedicated power port **116**C. A data port such as this is described in greater detail in U.S. patent application Ser. No. 10/423,490, which is hereby incorporated by reference herein in its entirety.

[0077] In order to provide user access to an input assembly, such as a touch pad or touch screen display, the glass main body **54** can include an access opening or window **62** having a shape that coincides with the shape of the input assembly. As shown in FIG. **10**, the access openings **62** for the display and touch pad can be located in the front planar surface **280**. The access openings **62** may be formed from processes (individually or in combination), such as machining, drilling, cutting, punching, and the like. In embodiments having the access openings **62**, some of the operational components may be loaded into the enclosure through the access openings **62**.

[0078] As noted above, the access openings **62** may provide user access to components, such as displays, touch pads, and buttons. Another way to provide access to a display is through the transparent glass enclosure. However, it can be appreciated that it is generally not desirable for the entire enclosure to be transparent because the internal operational components are usually not aesthetically pleasing. Thus, as discussed above, opacity (or translucency) around components, such as displays, is desirable. One way to achieve opacity is by ink printing or back printing the glass, as described above. FIG. **22** is a side cross-sectional view of a glass main body **54** with ink printing or back printing **450** to achieve opacity around a display. As shown in FIG. **22**, the printing **450** does not go all the way around the main body **54** so as to leave an area or transparency **460** for the display.

[0079] Another way to achieve opacity around a display or other component is to form the main body **54** by co-extruding an opaque glass material **146** together with a transparent glass material **148**, as shown in FIG. **11**. The dotted lines in FIG. **11** illustrate the separation between the

opaque material **146** and the transparent material **148**. As shown in FIG. **11**, the access opening or window **62** for the display is in the transparent material **148** portion.

[0080] Yet another way to achieve opacity around a component, such as a display, is to use a two-layer clad glass **140** for the main body **54**, as shown in FIG. **12**. The clad glass **140** is formed by fusing together a layer of opaque glass material **142** and a layer of transparent glass material **144** at a high temperature. The two layers **142**, **144** will cool as a single fused layer. If the opaque glass material **142** is positioned as the external layer and the transparent glass material **144** is positioned as the internal layer, then a portion of the opaque glass **142** can be etched, or otherwise removed, to expose a portion of the transparent glass **144** underneath to form a window for the display.

[0081] Another benefit of using a two-layer clad glass **140** is that the enclosure can be made stronger if the glass includes two layers having different coefficients of thermal expansion (CTE). If the external layer has a high CTE and the internal layer has a low CTE, then the two layers **142**, **144** will fuse into one layer, with the external surface glass layer **142** being in a compressive state. The skilled artisan will appreciate that glass is stronger in compression and weaker in tension, and the different cooling rates of the two layers of glass will result in the external surface layer **142** being in compression and therefore stronger.

[0082] Typically, a sheet of glass can be made stronger by chemically strengthening it. For example, the glass can be placed in a potassium bath to cause the entire surface of the glass to be in a compressed state and therefore stronger. Thus, a glass enclosure, as described herein, having a single layer of glass material could be chemically treated to improve the strength of the glass. However, potassium baths are expensive, so using a two-layer clad glass with layers that have different CTEs can provide cost savings. Thus, by using a two-layer clad glass **140**, opacity in desired portions can be achieved and the glass enclosure can be made stronger without employing an expensive potassium bath.

[0083] FIG. **24** is a perspective view illustrating a method of sealing of the interior of a glass enclosure to achieve a thicker surface layer in compression in a chemical strengthening process, in accordance with an embodiment. According to this embodiment, a thicker layer of compression on the external surface of the glass main body **54** is achieved. This thicker layer of compression on the external surface is relative to the internal surface of the main body **54**. In the illustrated embodiment, the external surface of the glass main body **54** can be made even stronger by sealing the open ends of the main body **54** to close off the interior of the main body **54** with seals **650** and placing the sealed off glass main body **54** in a potassium bath to compress only the exterior of the tube and not the interior. By compressing only the external surface of the glass main body **54** so that the interior of the main body **54** remains not chemically strengthened, a thicker layer of compression on the external surface can be achieved. It will be understood that any suitable method for sealing off the interior may be employed to achieve a thicker layer of compression on the external surface.

[0084] Although not shown, the internal components may also include components for processing, transmitting and receiving wireless signals (e.g., transmitter, receiver, antenna, etc.) through the glass enclosure **54**. By way of example, the device may include components for supporting FM, RF, Bluetooth, 802.11, and the like. In one embodiment, the device can include functionality for supporting cellular or mobile phone usage. In this embodiment, the device includes processors, transmitters, receivers, and antennas for supporting RF, and more particularly GSM, DCS and/or PCS wireless communications in the range of about 850 to about 1900 MHz. The device may, for example, include one or more antennas tuned to operate over the GSM, PCS and/or DCS frequency bands. By way of example, monopole, dipole and tri band and quad band antennas may be used. In one example, a PCS+DCS dipole antenna is used. The antenna may protrude out of the enclosure or it may be fully enclosed by the enclosure. If the latter, the glass enclosure is radio transparent and therefore capable of transmitting and receiving RF signals therethrough.

[0085] As described above, the main body of the enclosure can be formed from a glass material that is radio-transparent. By utilizing a glass enclosure that is radio-transparent, an internal antenna may be used, which is typically more robust and durable than an external antenna. Furthermore, many advantages regarding the use of an internal antenna may be achieved. For example, a smaller and cheaper antenna may be used. Moreover, the antenna can be integrated with other components and placed at almost any location within the enclosure, which helps make a smaller and more compact device in addition to reducing the cost of manufacture. An example of wireless communication devices and mechanisms can be found in U.S. patent application Ser. No. 10/423,490, which is hereby incorporated by reference herein in its entirety.

[0086] In another embodiment shown in FIG. **21**, the glass enclosure **400** can be formed using a deep drawing and a blow molding process. The deep drawing and blow molding processes result in a bucket or cup-like glass enclosure **400** with only one open end **410**, as shown in FIG. **21**. Therefore, only one end cap **64** is necessary to close off or seal such housing.

[0087] FIG. **13** shows one embodiment of an enclosure **550** that includes a top member **552** with a bottom member **554** attached thereto. The top and bottom members **552** and **554** can be formed from the same or different materials. In one embodiment, the top and bottom members **552**, **554** are both formed of glass. As should be appreciated, any combination can be used. Furthermore, this design can be made with or without using end caps. For example, the top and bottom members may include a closed end. According to the embodiment shown in FIG. **13**, the two members **552**, **554** allow components to be assembled onto the members **552**, **554** before the two members **552**, **554** are bonded together using, for example, an adhesive or laser frit bonding. For example, if both members **552**, **554** are glass, the laser frit bonding may be employed to hermetically seal the two members **552**, **554** together to form the enclosure **550**. Ink printing or back painting to achieve opacity in certain areas can also be performed prior to assembling the components and bonding the members **552**, **554** together. After the two members **552**, **554** are bonded together; the enclosure **550** can be polished so that the enclosure **550** has a more continuous and substantially seamless appearance. If no openings are provided in the enclosure **550**, then a laser frit bonded enclosure **550** can be fully hermetically sealed and therefore water resistant, as will be described in more detail below.

[0088] FIGS. **14**A and **14**B are a top plan view and perspective view of a glass band **610** according to an

embodiment. According to an embodiment, the glass band **610** is formed by an extrusion process and then cut to the desired height. In the illustrated embodiment shown in FIG. **15**, to form the housing **600**, the glass band **610** is laser frit bonded to two flat pieces of glass: a cover glass **620** and a back glass **630** to form a hermetic seal. In another embodiment, the glass band **610** can be bonded to a cover glass **620** and a back plate (not shown).

[0089] Because the cover glass **620** and back glass **630** are laser frit bonded to the glass band **610**, the embodiment of the housing **600** shown in FIG. **15** can be made fully hermetically sealed if the housing **600** is not provided with any access openings. As discussed above, the glass housing is capable of capacitive sensing, so components such as touch screens and touch pads can be positioned underneath the glass enclosure. Other controls, such as buttons for volume control or power, can also be positioned underneath the glass enclosure by placing capacitive sensors underneath the glass housing so that openings for buttons are unnecessary. Speakers and microphones may be provided with a GORETEX® membrane, which is waterproof. The device can send and receive signals using wireless signals, which can be transmitted through the radio transparent glass housing **600**.

[0090] If a method of transferring electric signals through an impermeable wall is desired for the embodiment shown in FIG. **15**, a component such as the one shown in FIG. **16** can be provided to maintain the water resistant characteristic of the device. The electrical signal transferring component **700** is made by forming a ceramic disk **710** around several metal rods **720**, as shown in FIG. **16**A. These metal rods are then shaved down or machined away to leave metal contacts **720** in the ceramic disk, thereby forming the water resistant audio jack, as shown in FIG. **16**B. It will be understood that the metal contacts **720** serve as electrical contacts. The component **700** can be used to receive signals from an audio jack and pass them into a water-resistant device, such as the one shown in FIG. **15**, such that no water can get through this geometry, but the electric signals can.

[0091] According to another embodiment, a display screen can be built into the glass enclosure. LCDs are typically formed with a carrier. However, the glass enclosure can be used as the carrier for the display, thereby decreasing the bulk of the device. It will be understood that such a display screen can only be built into an enclosures formed by bonding together two members, such as the one illustrated in FIG. **13**.

[0092] It should be noted that the invention is not limited to this particular form factor. For example, the cross-sectional shape, width, thickness, and height of the enclosure can all be adjusted according to the needs of the device. For example, in some cases, the width and thickness may be reduced while increasing the height. In addition, the openings in the enclosure can also be modified and may take on other shapes. For example, the touch pad circle may be decreased in diameter. In one example, the enclosure may have dimensions similar to the iPod Nano manufactured by Apple Inc. of Cupertino, Calif.

[0093] It should also be noted that completely different form factors may be used. For example, the device may correspond to smaller more compact devices, such as the Shuffle and remote controls manufactured by Apple Inc. of Cupertino, Calif.

[0094] FIG. **17** is a method of manufacturing an electronic device with a glass enclosure, in accordance with one embodiment. The glass enclosure may be embodied in various forms including those previously mentioned. The method begins at block **1700**, where a hollow glass tube is provided. It will be understood that the glass may be tinted a desired color or made opaque or translucent in certain areas. The tube can have any cross-sectional shape to create the desired shaped enclosure formed from glass.

[0095] Thereafter, in block **1710**, the glass enclosure can be machined to create holes and features into the enclosure, such as, for example, the openings in the front face of the enclosure. For example, a CNC machine may be used to perform some or all of the machining operations. Alternatively, the openings and features may be made with laser cutting, jet cutting, ultrasonic cutting, chemical etching, or any other suitable material removal operation.

[0096] Thereafter, in block **1720**, the edges of the glass tube are treated by creating chamfered or radius edges. In block **1730**, a surface finishing operation may be performed. In one embodiment, a polishing operation can be performed to create a smooth (gloss) finish. In another embodiment, a blasting operation can be performed to create a rough (matte) finish.

[0097] In some cases, the method may include an additional step **1740** of applying a protective coating or protective features to the outside of the glass enclosure. This may be performed before or after placement of the internal components. The coatings or features may, for example, be formed from deformable materials, such as silicon, foam and rubber materials. The coatings or protective features are typically positioned on the exterior surface to prevent cracking and protect the glass enclosure from undesirable forces as, for example, when the glass enclosure is dropped. The coatings and protective features can be placed almost anywhere on the glass enclosure, but in most cases are placed at least at the edges where the glass enclosure may be susceptible to cracking. In some cases, the end plates may even serve this function.

[0098] The method then proceeds to block **1750** where the enclosure is cleaned and inspected. The inspection may include micro photography as well as chemical composition analysis. When approved, the enclosure can be used to assemble the final product (e.g., internal components inserted inside) in block **1760**. In step **1770**, the end caps are placed on the open ends to seal the housing.

[0099] Although the invention has been primarily directed at a single enclosure (except for the end plates), it should be appreciated that, in some cases, the enclosure may be formed from multiple parts rather than a single integrally formed piece. Each of these parts may be extruded or otherwise formed. Furthermore, they may be formed from the same materials (glass/glass), same class of materials (first glass material/second glass material) or from different classes of materials (glass/metal, glass/plastic, plastic/metal or glass/plastic/metal). By way of example, it may be beneficial to combine materials to obtain advantages of each of the materials. Any combination may be used. Moreover, the multiple parts may include frame components with plates attached thereto, or a top member and a bottom member that are attached together. The attachment means may be widely varied and may include such things as fasteners, glues, epoxies, double sided tape, snaps, mechanical interlocks that are molded together, and the like. One

example of connecting parts together can be found in U.S. Pat. No. 7,012,189 and U.S. application Ser. No. 10/928,780, both of which are hereby incorporated by reference herein in their entireties.

[0100] Moreover, although not shown, the various components of the enclosure may consist of multiple layers that are glued, press fit, molded or otherwise secured together. In one example, the enclosure consists of multiple layers that form a single laminate structure formed for example by gluing. By way of example, the entire or portions of the enclosure walls may be formed from layers of metals, ceramics and/or plastics. In the case of radio transparency, the layers may include glass and ceramics as, for example, forming a wall with a glass outer layer and a ceramic inner layer (or vice versa).

[0101] Generally speaking, when using an internal antenna, it is desirable to increase the radio transparency of the enclosure in order to effectively perform wireless transmissions therethrough. Thus, a substantial portion of the enclosure is formed form materials capable of providing radio-transparency (e.g., glass, ceramics, plastics, etc.). In most cases, the radio transparent portions of the enclosure constitute a significant area of the entire enclosure, for example, greater than 50%, more particularly greater than 75%, and even more particularly greater than 85%. The radio transparent portions may even be greater than 90%, and more particularly greater than 95%, and in some cases 100% of the enclosure.

[0102] The radio transparent portions may be embodied in a variety of ways. In one embodiment, the radio transparent portions constitute the entire enclosure. For example, all the walls of the enclosure are radio transparent (e.g., both the main body and the end caps). In another embodiment, the radio transparent portions constitute one or more walls of the housing, such as, for example, the top and/or bottom member of the enclosure shown in FIG. **13**. In another embodiment, the radio transparent portions may constitute a part of one or more walls of the enclosure. That is, only a portion of a wall may be radio transparent. For example, the wall may be separated into two parts, or in the case of a laminated wall, some portion of the wall may include a non radio transparent layer.

[0103] It is generally believed that a greater area of radio transparency produces a stronger signal during transmissions and stronger reception when a signal is received. However, other factors may play a role as for example the location of the internal antenna. By way of example, in an enclosure with a decreased amount of radio transparency, the internal antenna may be positioned closer or proximate to the radio transparent portions of the enclosure. Furthermore, it should be noted that although non radio transparent portions such as metals typically degrade radio transmissions, in some cases, non radio transparent portions may be designed in such a manner as to enhance or help radio transmissions.

[0104] While this invention has been described in terms of several preferred embodiments, there are alterations, permutations, and equivalents, which fall within the scope of this invention. For example, although some embodiments include an integrally formed internal rail system, in some cases the internal rail system may be a separate component that is attached within the main body or it may not even be included in some cases. It should also be noted that there are many alternative ways of implementing the methods and apparatuses of the present invention. For example, although an extrusion process is preferred method of manufacturing the integral tube, it should be noted that this is not a limitation and that other manufacturing methods may be used in some cases (e.g., injection molding, press forming). In addition, although the invention is directed primarily at portable electronic devices such as media players, and mobile phones, it should be appreciated that the technologies disclosed herein can also be applied to other electronic devices, such as remote controls, mice, keyboards, monitors, and accessories for such devices. It is therefore intended that the following appended claims be interpreted as including all such alterations, permutations, and equivalents as fall within the true spirit and scope of the present invention.

What is claimed is:

1. A portable electronic device, the portable electronic device comprising:

an integral enclosure that surrounds and protects internal operational components of the portable computing device, the enclosure including a main body of glass material that permits wireless communications therethrough, the main body having an inner cross-sectional shape and an external cross-sectional shape, the inner cross-sectional shape being different from the external cross-sectional shape;

a liquid crystal display touch screen assembly positioned within the main body but externally accessible; and

an internal antenna disposed inside the enclosure.

2. The portable electronic device as recited in claim **1**, wherein the portable electronic device is a handheld computing device.

3. The portable electronic device as recited in claim **1**, wherein the portable electronic device is a mobile phone.

4. The portable electronic device as recited in claim **1**, further comprising an end cap positioned on an open end of the enclosure.

5. The portable electronic device as recited in claim **4**, wherein the internal operational components are enclosed by the enclosure and end cap.

6. The portable electronic device as recited in claim **1**, wherein at least a portion of the enclosure comprises at least an inner structural wall and an outer structural wall that are formed of glass.

7. The portable electronic device as recited in claim **1**, wherein the outer structural wall has a higher coefficient of thermal expansion (CTE) than does the at least one inner structural wall.

8. The portable electronic device as recited in claim **1**, wherein the enclosure includes a substantially planar front surface.

9. The portable electronic device as recited in claim **1**, wherein the external cross-sectional shape is substantially uniform cross-section along the main body.

10. A portable electronic device, comprising:

an integral and substantially seamless enclosure that surrounds and protects internal operational components of the portable electronic device, the enclosure having a user interface opening and including a main body comprising glass material that permits wireless communications therethrough;

a user interface subassembly positioned within the main body and adjacent the user interface opening; and

an internal antenna disposed inside the enclosure,

wherein the main body has an inner cross-sectional shape and an external cross-sectional shape, the inner cross-sectional shape being different from the external cross-sectional shape.

11. The portable electronic device as recited in claim **10**, wherein the enclosure has a planar front surface, and wherein the user interface subassembly is positioned at the front planar surface and adjacent the user interface opening.

12. The portable electronic device as recited in claim **10**, wherein the user interface subassembly includes at least a display and a touch pad.

13. The portable electronic device as recited in claim **10**, wherein the enclosure is formed from an extruded glass material.

14. The portable electronic device as recited in claim **10**, wherein at least a portion of the enclosure comprises at least an inner structural wall and an outer structural wall.

15. The portable electronic device as recited in claim **14**, wherein the outer structural wall has a higher coefficient of thermal expansion (CTE) than does the at least one inner structural wall.

16. The portable electronic device as recited in claim **10**, wherein the enclosure includes a substantially planar front surface.

17. The portable electronic device as recited in claim **10**, wherein the external cross-sectional shape is substantially uniform cross-section along the main body.

* * * * *