US 20180052534A1

(19) United States

(12) Patent Application Publication

Ron et al.

(10) Pub. No.: US 2018/0052534 A1

(43) Pub. Date: Feb. 22, 2018

(54) **ADJUSTABLE DIGITAL ERASER**

(71) Applicant: **Microsoft Technology Licensing, LLC**, Redmond, WA (US)

(72) Inventors: **Uri Ron**, Kfar-Saba (IL); **Eliyahu Barel**, Beit Ariye (IL); **On Haran**, Kfar-Saba (IL)

(21) Appl. No.: **15/242,392**

(22) Filed: **Aug. 19, 2016**

Publication Classification

(51) **Int. Cl.**

G06F 3/0354 (2006.01)

G06T 11/60 (2006.01)

(52) **U.S. Cl.**

CPC ***G06F 3/03545*** (2013.01); ***G06T 11/60*** (2013.01)

(57) **ABSTRACT**

The structure and devices described herein provide an improved digital eraser for a stylus. A stylus may have an eraser end that transmits an erase signal from an eraser antenna. A cover houses the eraser antenna and can be configured with varying geometry to selectively position the eraser antenna closer to, or further away from, a digitizer screen of a computing device when the cover is in contact with the digitizer screen. The computing device can detect the signal strength of the erase signal and/or the contact area between the cover and the digitizer screen and vary one or more of the width, area, or opacity of the erase function. The computing device can further, based upon the strength of the signal and/or the contact area between the cover and the digitizer screen, determine the tilt and/or the rotation of the stylus.

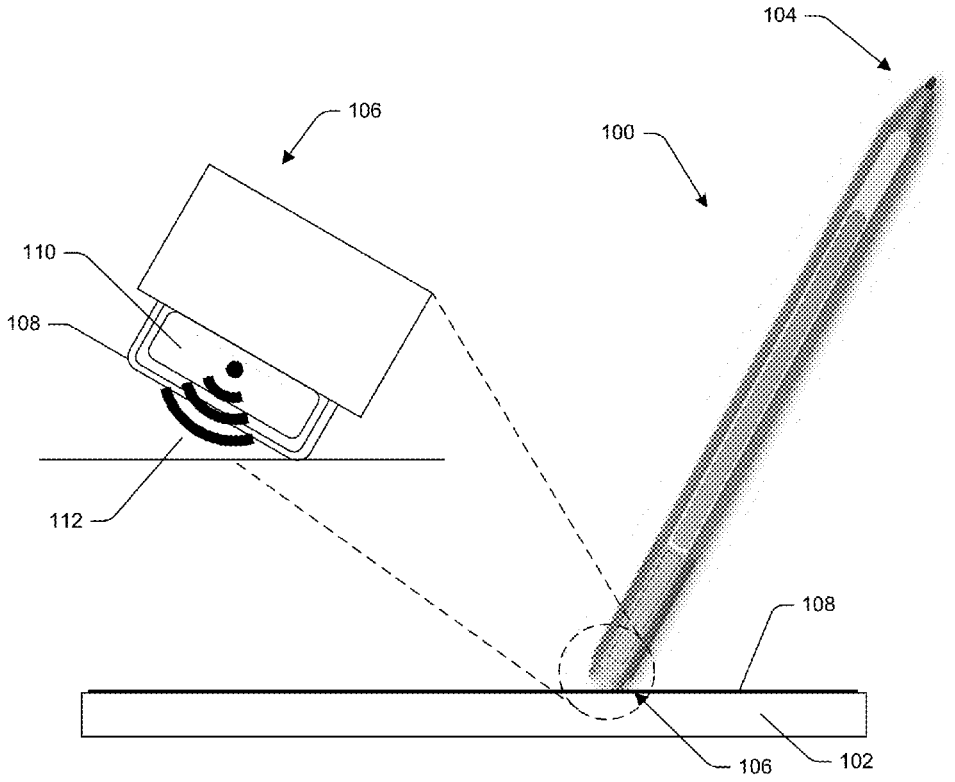

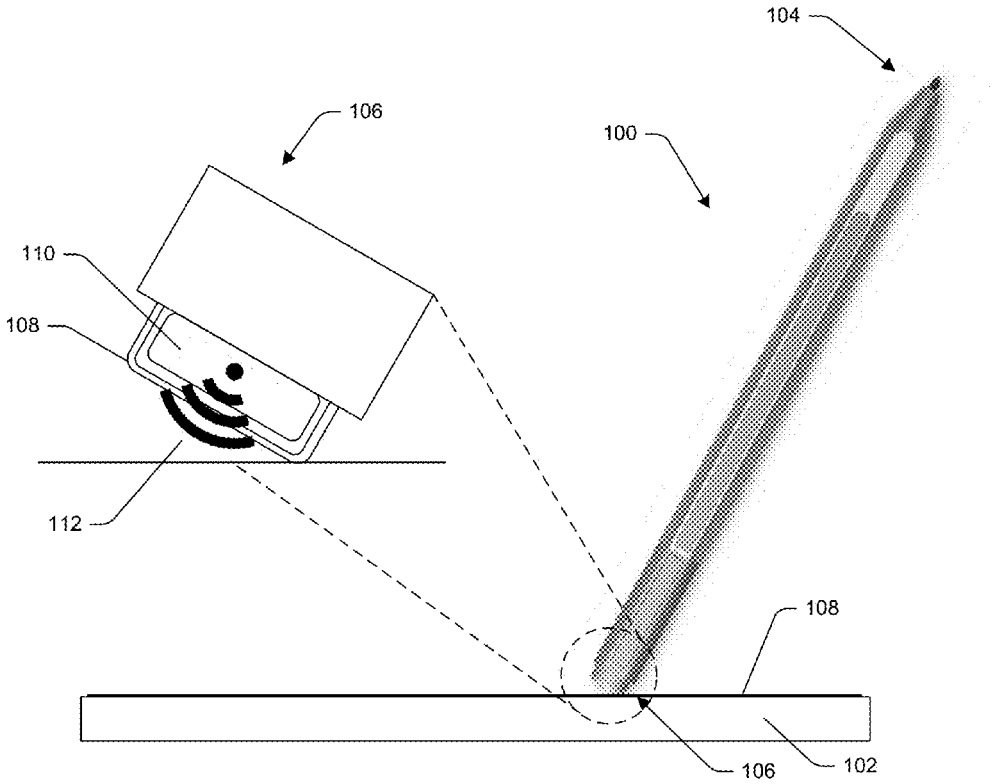

FIG. 1

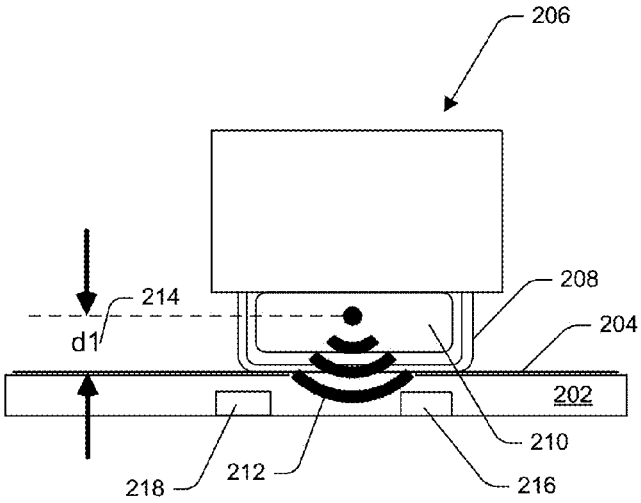

FIG. 2a

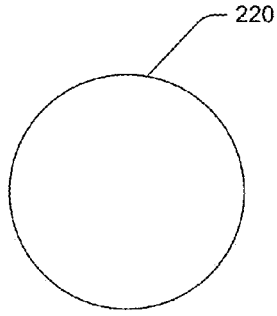

FIG. 2b

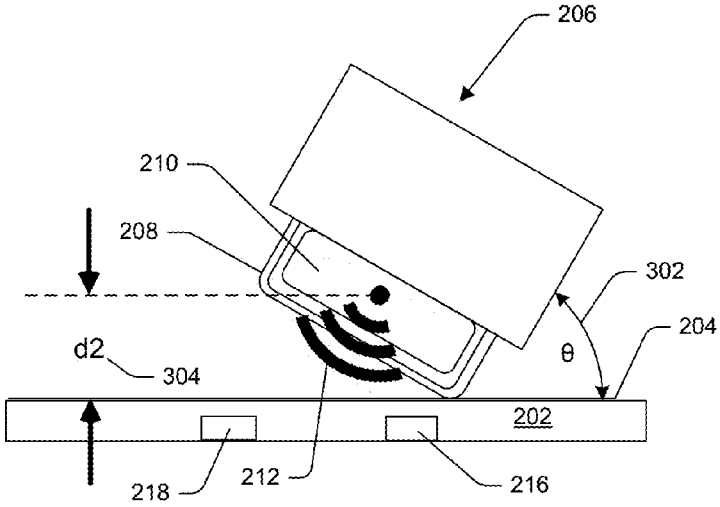

FIG. 3a

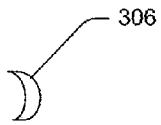

FIG. 3b

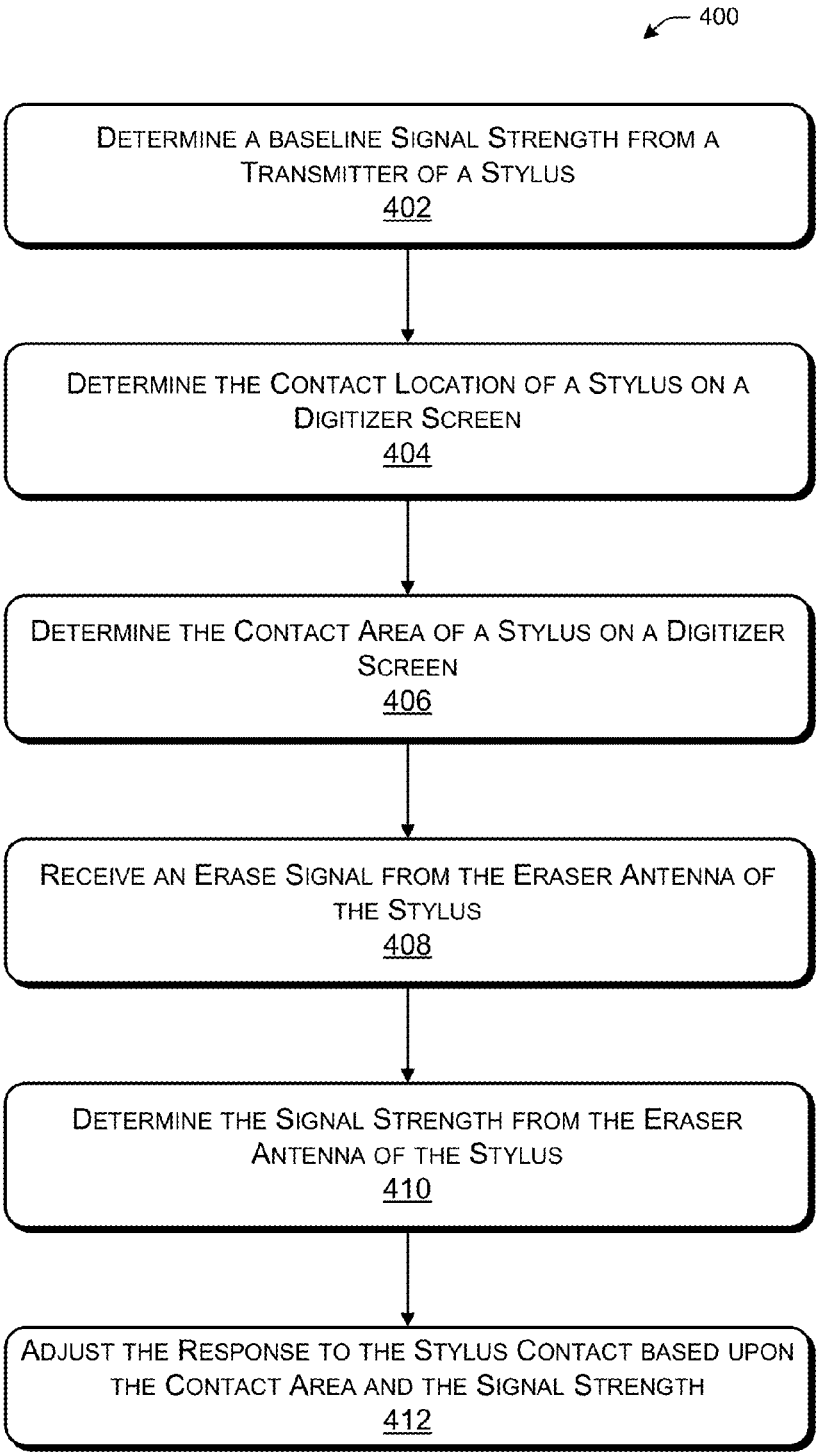
400
DETERMINE A BASELINE SIGNAL STRENGTH FROM A TRANSMITTER OF A STYLUS
402
DETERMINE THE CONTACT LOCATION OF A STYLUS ON A DIGITIZER SCREEN
404
DETERMINE THE CONTACT AREA OF A STYLUS ON A DIGITIZER SCREEN
406
RECEIVE AN ERASE SIGNAL FROM THE ERASER ANTENNA OF THE STYLUS
408
DETERMINE THE SIGNAL STRENGTH FROM THE ERASER ANTENNA OF THE STYLUS
410
ADJUST THE RESPONSE TO THE STYLUS CONTACT BASED UPON THE CONTACT AREA AND THE SIGNAL STRENGTH
412

FIG. 4

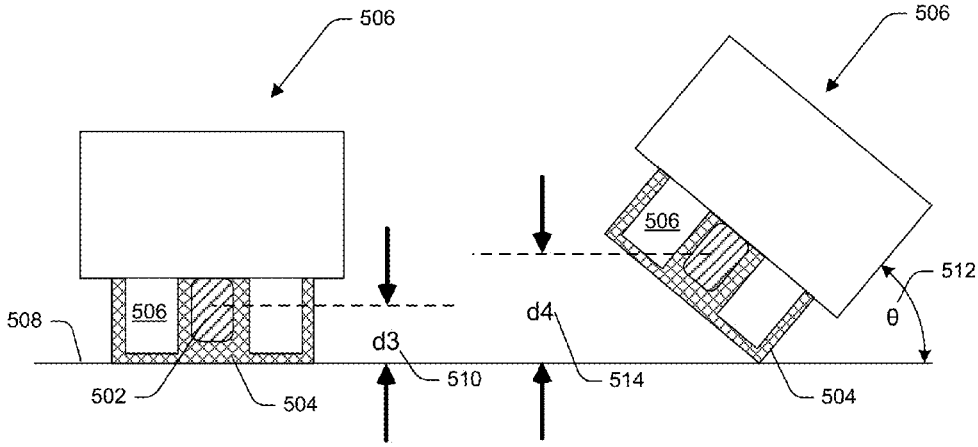

FIG. 5a FIG. 5b

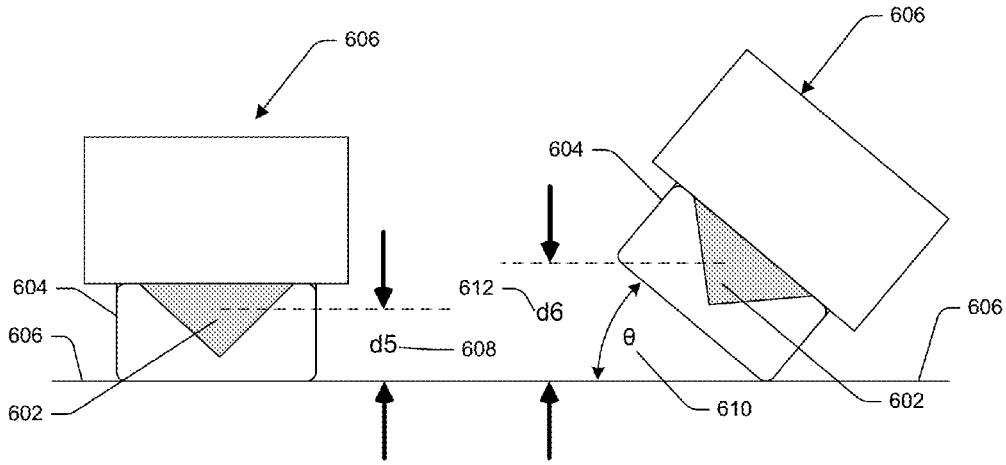

FIG. 6a FIG. 6b

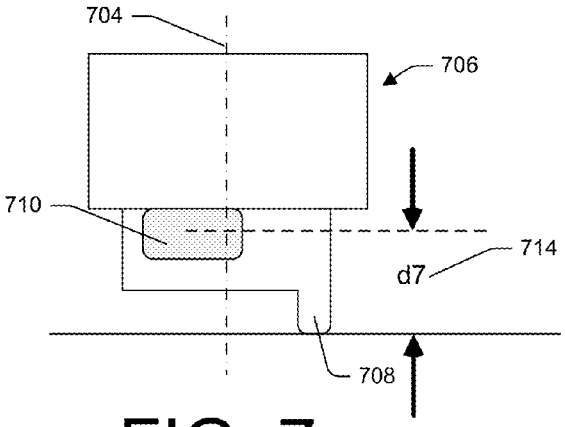

FIG. 7a

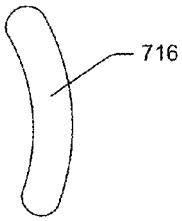

FIG. 7b

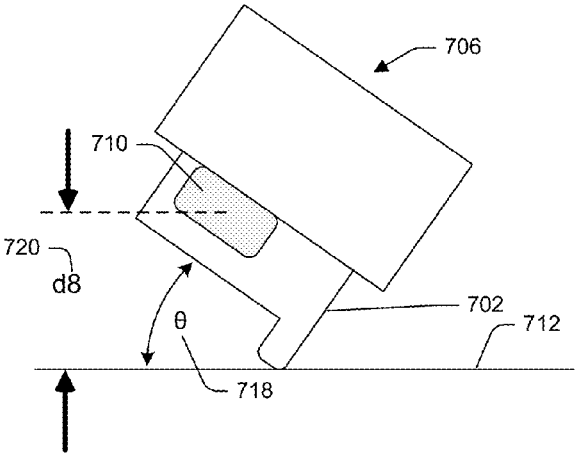

FIG. 7c

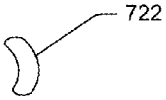

FIG. 7d

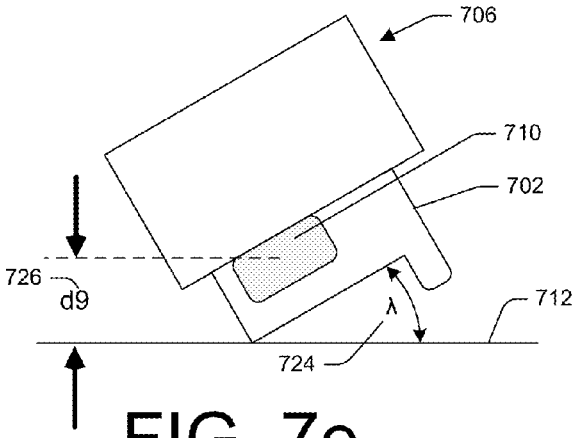

FIG. 7e

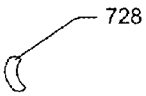

FIG. 7f

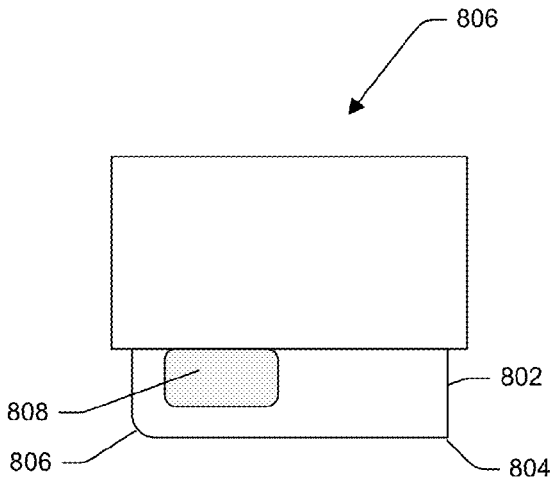

FIG. 8a

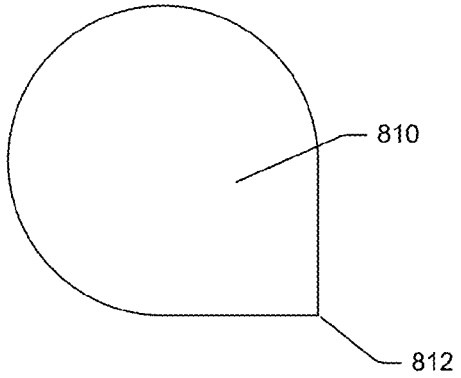

FIG. 8b

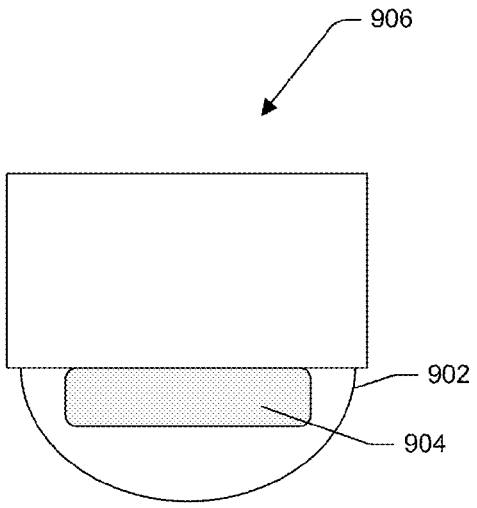

FIG. 9a

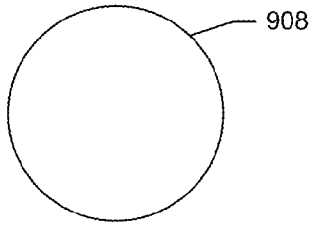

FIG. 9b

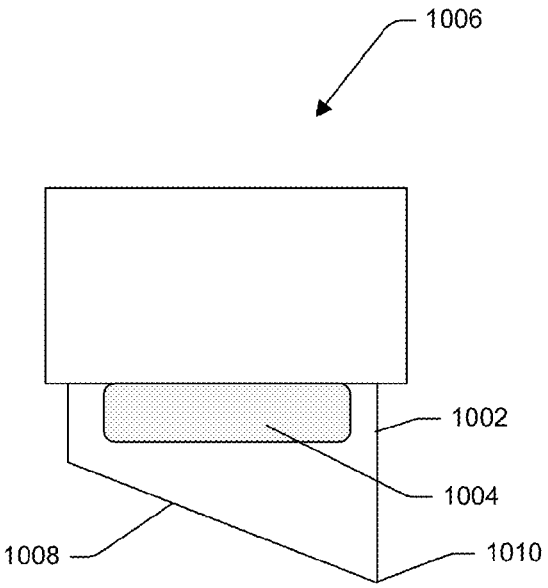

FIG. 10a

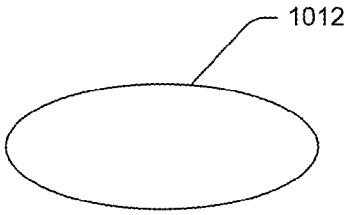

FIG. 10b

ADJUSTABLE DIGITAL ERASER

BACKGROUND

[0001] Personal computers utilize various mechanisms for receiving input. For example, many personal computers allow a keyboard, a mouse, a touchpad, or other such devices to provide input to the personal computer. Mobile personal computers, such as tablets, smart phones, laptops, and even many non-mobile computers, may incorporate a touch-screen that can receive input directly through contact, or near-contact, with the screen.

[0002] A stylus is one preferred implement for inputting information into a computer through the touch-screen. A stylus is typically shaped like a pen or a pencil and has a writing end designed for entering information, such as handwritten text or drawings, and a tail end that may function as an eraser to remove information from the touch-screen. However, the erase signal output from a stylus does not provide for a high degree of fineness, such as the ability to vary the size of the erased area or the ability to control the opacity of the erased area.

SUMMARY

[0003] The systems, methods, and techniques described herein provide for an improved stylus incorporating a tail end having a digital eraser that outputs an erasing signal from an antenna positioned within the tail end. In some instances, the digital eraser is asymmetrical about a longitudinal axis of the stylus such that, depending on the rotation of the stylus or the tilt of the stylus with respect to a touch-screen, the antenna may be closer to, or further away from, the digitizing surface of a computing device when the digital eraser is in contact with the digitizing surface.

[0004] Consequently, the change in distance between the eraser antenna and the digitizing surface affects a change to the erase signal that is received by the computing device. The computing device can detect the change in signal due to the varying distance of the eraser antenna from the digitizing surface and can make adjustments to its response to the erase signal.

[0005] Further, the digitizing surface may detect the surface area of the digital eraser that is in contact with the digitizing surface and the computing device may make further adjustments to the response to the erase signal accordingly. For example, where there is relatively small surface contact between the digital eraser and the digitizing surface, the size of the erased portion may be very fine, such as erasing individual pixels. Similarly, where there is a relatively large area of surface contact between the digital eraser and the digitizing surface, the computing device may respond to the erase signal with a stroke erase function.

[0006] In addition, the strength of the erase signal in combination with the surface area contact between the digital eraser and the digitizing surface can be used to determine a degree of tilt of the stylus relative to the digitizing surface. The degree of tilt may further be used by the computing device to adjust its response to the erase signal emitted from the tail end of the stylus.

[0007] Consequently, the computing device may be able to determine the tilt angle of the stylus with respect to the digitizing surface, the rotational orientation of the stylus about its own axis, and adjust the fineness and/or the opacity of the erase function based upon a single erase signal emitted from a single eraser antenna within the tail end of the stylus.

BRIEF DESCRIPTION OF THE DRAWINGS

[0008] The detailed description is described with reference to the accompanying figures. In the figures, the left-most digit(s) of a reference number identifies the figure in which the reference number first appears. The same reference numbers in different figures indicate similar or identical elements.

[0009] FIG. **1** is an illustration of one example of a stylus incorporating an eraser antenna within a digital eraser of a stylus.

[0010] FIG. **2***a* is an elevational simplified schematic diagram of a tail end of a stylus.

[0011] FIG. **2***b* is an illustration of the surface contact between the digital eraser and the digitizer screen of FIG. **2***a*.

[0012] FIG. **3***a* is an elevational simplified schematic diagram of the tail end of the stylus of FIG. **2***a* illustrating the stylus at a tilt angle with respect to the digitizing surface.

[0013] FIG. **3***b* is an illustration of the surface contact between the digital eraser and the digitizer screen of FIG. **3***a*.

[0014] FIG. **4** is an example block diagram showing how the computing device can determine orientation of a stylus.

[0015] FIG. **5***a* is an elevational simplified schematic diagram of a tail end of a stylus.

[0016] FIG. **5***b* is an elevational simplified schematic diagram of the tail end of the stylus of FIG. **5***a* illustrating the stylus at a tilt angle with respect to the digitizing surface.

[0017] FIG. **6***a* is an elevational simplified schematic diagram of a tail end of a stylus.

[0018] FIG. **6***b* is an elevational simplified schematic diagram of the tail end of the stylus of FIG. **6***a* illustrating the stylus at a tilt angle with respect to the digitizing surface.

[0019] FIG. **7***a* is an elevational simplified schematic diagram of the tail end of a stylus.

[0020] FIG. **7***b* is an illustration of the surface contact between the digital eraser and the digitizer screen of FIG. **7***a*.

[0021] FIG. **7***c* is an elevational simplified schematic diagram of the tail end of the stylus of FIG. **7***a*.

[0022] FIG. **7***d* is an illustration of the surface contact between the digital eraser and the digitizer screen of FIG. **7***c*.

[0023] FIG. **7***e* is an elevational simplified schematic diagram of the tail end of the stylus of FIG. **7***a*.

[0024] FIG. **7***f* is an illustration of the surface contact between the digital eraser and the digitizer screen of FIG. **7***d*.

[0025] FIG. **8***a* is an elevational simplified schematic diagram of the tail end of a stylus.

[0026] FIG. **8***b* is a top plan view of the tail end of the stylus of FIG. **8***a*.

[0027] FIG. **9***a* is an elevational simplified schematic diagram of the tail end of a stylus.

[0028] FIG. **9***b* is a top plan view of the tail end of the stylus of FIG. **9***a*

[0029] FIG. **10***a* is an elevational simplified schematic diagram of the tail end of a stylus.

[0030] FIG. **10***b* is a top plan view of the tail end of the stylus of FIG. **10***a*

DETAILED DESCRIPTION

[0031] A stylus is a writing instrument designed to be used with a computing device to enter input to the computing device in the form of written text and images. More spe-

cifically, a stylus communicates with a computing device both through physical contact with a touch-screen of the computing device as well as sending wireless signals to the computing device. A stylus is a relatively small accessory with limited interior space to house a power system, a processing system, and a communication system, so there is limited opportunity to build additional features or functionality into a stylus.

[0032] However, a stylus and computing device can be configured to cooperate to provide additional functionality from the stylus with minimal changes to the stylus and/or the computing device. For instance, the tail end of the stylus may be outfitted with a digital eraser. The digital eraser may have a cover formed of an electrically conductive material such as a conductive rubber, a plastic or plastic alloy, or some other suitable material that houses an eraser transmitter in close proximity. In other implementations, the cover is formed of a dielectric material, such as, for example, plastic or rubber. When the digital eraser touches the screen of the computing device, the computing device senses both the physical touch of the digital eraser and the signal emitted from the eraser transmitter.

[0033] The signal emitted from the eraser transmitter varies in strength depending on distance and obstacles between the transmitter and the sensor. Hence, by configuring the digital eraser with a cover having various geometries, when the digital eraser is in contact with the screen of the computing device, the transmitter may be positioned at various distances from the screen, and thereby vary the signal strength received by the computing device from the eraser transmitter. As a result, the computing device can take various actions based upon the signal strength. For instance, as one example, where the signal emitted from the eraser transmitter is relatively strong compared to a baseline signal, the computing device may interpret the touch input from the digital eraser as a stroke erase. In other words, the computing device will interpret the touch input from the digital eraser as a broad stroke that will change the pixel color values located within an erasing area to have the same color value as the background pixel colors.

[0034] In another instance, where the signal emitted from the eraser transmitter is relatively weak compared to a baseline signal, the computing device may interpret the touch input from the digital eraser as a pixel eraser. That is, the fineness of the eraser will be increased (e.g., the area to be erased is reduced) to allow the stylus to input an erase command to the computing device with a high level of precision.

[0035] In addition to evaluating the signal strength of the erase signal, the computing device may also analyze the touch input from the digital eraser. A computing device may have a touch-screen incorporating a digitizer, such as a capacitive inductance digitizer ("digitizer screen"), that can detect a location at which the stylus makes contact. In addition, the digitizer screen may additionally detect the surface area of contact between the digital eraser and the digitizer screen. The computing device may additionally use the contact area as an input in determining the fineness of the erase function. In other words, where there is a relatively small surface contact between the digital eraser and the digitizer screen, the area to be erased is reduced when compared to an instance where there is a relatively large surface contact between the digital eraser and the digitizer screen.

[0036] Thus, the digital eraser may indicate a location on the digitizer screen to perform an erase function, the computing device will detect the erase signal emitted from the erase antenna of the stylus, and will further detect the strength of the erase signal and/or the surface area of contact between the digital eraser and the digitizer screen and erase information from the digitizer screen accordingly.

[0037] A stylus may be designed to mimic the look and feel of a pen or pencil—devices that many users are familiar with. As such, the use of a stylus, in many instances, is designed to mimic the use of a pen or pencil. Accordingly, for convenience in understanding the ensuing description, the use of a stylus to enter and erase digital information entered into a computing device, will be referred to as "writing" and "erasing." Accordingly, the use of the term "digital ink" refers to the display of information on a screen of a computing device and may include text or images entered into the computing device via a touch-screen by a stylus. A "stroke erase" refers to erasing multiple pixels of information in a path that the digital eraser takes across the digitizer screen. A "pixel erase" refers to the fineness of the erase function, e.g., being able to erase single pixels along a path that the digital eraser defines across the digitizer screen. The area to be erased, whether a stroke erase or a pixel erase, may be referred to as the erase area, and it may coincide with the area of contact between the digital eraser and the digitizer screen as the digital eraser moves across the digitizer screen. Based upon the foregoing description, the erase function may be thought of as being able to erase digital ink through broad strokes or fine strokes, and any weight of stroke in between.

[0038] With reference to FIG. **1**, a stylus **100** works in conjunction with a computing device **102** to allow precise input on a touch-screen of the computing device. The stylus **100** typically has a barrel that forms a writing end **104** and a tail end **106**. The writing end **104** may be configured with any manner of tip for cooperating with the touch-screen to enable a user to input information to the computing device with the stylus **100**. A stylus **100** may be configured to input text similar to using a pencil or a pen on paper, or the stylus **100** may be configured to function as a brush, crayon, marker, charcoal, or some other type of device for inputting information into the computing device as could be applied to paper or canvas.

[0039] The computing device **102** configured to accept input from a stylus will typically include a touch-screen **108**, and in many cases, includes a capacitive inductance touch-screen that is able to detect a point on the screen where the stylus **100** makes contact with the screen **108**, and may also be able to detect the position of the stylus **100** when it is in close proximity to the touch-screen **108**. As used herein, when referring to the use of a stylus to input information to a computing device, the terms "screen," "touch-screen," and "digitizer screen" may be used interchangeably. The touch-screen **108** may also be configured to detect pressure applied by the stylus **100**, and in some cases, the stylus **100** will detect pressure exerted against the touch-screen, such as through pressure sensors positioned in the writing end **104** and/or the tail end **106**, and send data to the computing device **102** indicating the pressure at which the stylus **100** is being pressed against the touch-screen **108**.

[0040] The computing device **102** may be any type of computing device that may be configured with a screen for receiving input from a stylus **100**. Suitable types of com-

puting devices **102** may include a desktop computer, a laptop computer, a smartphone, a tablet computer, a gaming console, a television, or some other computing device **102** that is capable of being operated as described herein.

[0041] As illustrated, the stylus **100** has a barrel **104** that is generally an elongate member having any suitable cross sectional shape. In many implementations, the stylus **100** includes a hollow elongate barrel and is configured to resemble a pen or pencil and may have a cross-sectional shape that resembles a circle, hexagon, octagon, or some other shape that allows the stylus **100** to be used in the manner it is designed for.

[0042] The tail end **106** may include a cover **108**, which may be formed of a dielectric material, such as a rubber, any suitable metal or metal alloy, a plastic material, a composite material, or any combination of materials. In some examples, an eraser antenna **110** is disposed within the tail end **108** and is protected by the cover **108**. The eraser antenna **110**, when active, emits an erase signal **112**. The eraser antenna **110** is a transmitter that emits a wireless signal, and the terms antenna and transmitter may be used interchangeably herein.

[0043] It should be appreciated that, while the present disclosure and figures are focused on a tail eraser that emits an erase signal, the concepts provided herein could equally apply to a different type of input device, and could be used in the manner described herein to mimic the effects of a marker, paint brush, crayon, charcoal, or some other medium as applied to paper or canvas. For example, while the disclosure describes a digital eraser providing multiple levels of fineness with respect to the erase command, the same could be applied to a stylus that mimics another artistic medium by varying the fineness of the brush or applicator used to enter digital ink into the computing device **102**. Alternatively, the erase signal could be changed or replaced with an inking signal and the tail end **108** could be used to initiate an inking function to enter text or images into the computing device.

[0044] With reference to FIGS. **2***a* and **2***b*, the tail end **206** of an implementation of a digital eraser includes a cover **208** that has a generally circular cross section. An eraser antenna **210** is disposed within the cover and emits an erase signal **212**. For ease in discussion, it will be assumed that the erase signal **212** emits from a point source located approximately at the center of the illustrated eraser antenna **210**. Of course, the eraser antenna **210** could be formed in any suitable manner and in any desirable shape to provide the improvements described herein.

[0045] The eraser antenna **210** thus emits an erase signal **212** from a location that is spaced a distance d**1** **214** from the digitizer screen **204**. The computing device **202** may be configured to detect the erase signal **212**, and further, may be configured with a signal strength meter **216** to determine the strength of the erase signal **212**. A microprocessor **218** in the computing device **202** may receive the output from the signal strength meter **216** to determine information about the stylus.

[0046] The erase signal **212** may be attenuated during transmission, that is, the signal strength may degrade, or be reduced, as it propagates through solids or gasses, and further attenuates at the interface between different materials. In many instances, the erase signal **212** is a low energy signal and may be electromagnetic, electrostatic, infrared, radio frequency, or some other type of wireless signal. Attenuation of a low energy signal may represent a greater percentage of the overall signal reduction than a high energy signal. That is, a small attenuation of a low energy signal is more dramatic than the same attenuation of a high energy signal.

[0047] The digitizer screen **204** may additionally detect the surface contact with the tail end **206**. As illustrated in FIG. **2***b*, when the stylus is oriented substantially orthogonally to the plane of the digitizer screen **204** (as illustrated in FIG. **2***a*), the surface contact area **220** between the digital eraser and the digitizer screen **204** is circular shaped and the surface contact area **220** is maximized in those implementations in which the cover **208** on the tail end **206** defines a flat surface.

[0048] In contrast, FIGS. **3***a* and **3***b* show the tail end **206** of the stylus of FIG. **2***a* when tilted at an angle θ **302**. In this orientation, the eraser antenna **210** emits an erase signal **212** from a location that is spaced a distance d**2** **304** from the digitizer screen **204**, where d**2** **304** is greater than d**1** **214**. The relationship between d**1** **214** and d**2** **304** can be determined by trigonometric identities and are a function of the cover **208** geometry, the angle θ **302**, and the position of the antenna within the cover **208**. The change in distance from d**1** **214** to d**2** **304** results in greater attenuation of the erase signal **212**, which can be detected by the signal strength meter **216** of the computing device **202**. The microcontroller **218** of the computing device **202** may then be able to determine the approximate angle of tilt θ **302** of the stylus.

[0049] As shown in FIG. **3***b*, when the stylus is tilted at an angle θ **302**, the surface contact area **306** between the cover **208** and the digitizer screen **204** resembles a crescent, but perhaps more importantly, has a significantly smaller surface contact area **306** than when the stylus is oriented orthogonally to the digitizer screen **204** as shown in FIG. **2***b*. The digitizer screen **306** may additionally detect the surface contact area **306** and use that information to approximate the tilt θ **304** of the stylus. Moreover, when the stylus is tilted at an angle θ **302**, the attenuated erase signal **212**, the surface contact area **306**, or both may be used by the computing device **202** to modify the erase function. For example, an erase function may be the result of the erase signal **212** and contact between the cover **208** and the digitizer screen **204**. The computing device **202** may detect the erase signal **212** and contact between the cover **208** and the digitizer screen **204**. The computing device **202** may then erase the information written on the screen as a result. However, where the stylus is tilted at an angle θ **302** and the surface contact area **306** is small, the computing device may enter a pixel erase mode in which the area to be erased is relatively small, such as approximately the same area as the surface contact area **306**. Therefore, the digital eraser is able to closer resemble the use of a traditional eraser, that is, the digital eraser can erase the portions of digital ink that it comes in contact with based upon the surface contact area **306**.

[0050] In some instances, the computing device **202** may determine the stylus tilt angle θ **302** and reduce the strength of the erase function accordingly, that is, rather than completely erasing the information on the digitizer screen **204**, partially erase the information such as when a pencil is lightly applied to paper to only reduce the opacity of the information on the paper.

[0051] With reference to FIG. **4**, a sample block diagram is illustrated to describe an example process **400** for receiving and interpreting an erase signal. At block **402**, a baseline

signal is received from the stylus **100** to determine the signal strength at a known distance between the eraser antenna **110** and the digitizer screen **102**. In some instances, this may be accomplished through a configuration utility stored and executed on the computing device **202** such as by causing the stylus to be oriented orthogonally to, and in contact with, the digitizer screen in order to determine the baseline signal strength. In some instances, when in this orientation, the eraser antenna **110** will be at its minimum distance away from the digitizer screen and therefore the erase signal will be at its maximum strength. This maximum strength erase signal may serve as the baseline against future erase signals that are compared to determine the erase signal attenuation. This process may be repeated at intervals since the maximum strength erase signal may also be dependent upon the battery voltage within the stylus, which may slightly change over time as the battery discharges and/or is charged.

[0052] At block **404**, the computing device, through the digitizer screen, detects the location at which the stylus touches the digitizer screen. The digitizer screen may have conductive lines that form a grid on the digitizer screen. As the stylus touches the digitizer screen, a signal is generated that can be correlated with an x and y position on the screen.

[0053] At block **406**, the computing device, through the digitizer screen, detects the contact area of the stylus on the digitizer screen. This may be performed simultaneously, or substantially simultaneously, as detecting the location of touch of the stylus on the digitizer screen. The contact area is dependent upon the geometry of the stylus, the tilt angle of the stylus, and in some implementations, the rotation of the stylus, and the force at which the stylus is pressed against the digitizer screen. The contact area may further include a path that the stylus takes across the digitizer screen. That is, the contact area may be determined based upon the combined physical contact area of the stylus as it moves across the digitizer screen.

[0054] At block **408**, the computing device receives an erase signal from the eraser antenna. Of course, the erase signal may be received prior to detecting the contact location or the contact surface area. That is, the computing device may detect the erase signal prior to contact between the digital eraser and the digitizer screen and may be prepare to perform an erase function.

[0055] At block **410**, the computing device may optionally determine the signal strength being emitted from the eraser antenna of the stylus. The determined signal strength may be compared against the baseline signal to determine the change in distance between the eraser antenna and the digitizer screen. The change in distance may be used to determine the tilt or in some cases, the rotation, of the stylus. Attenuation of the erase signal may additionally be increased through obstacles in the path of the erase signal. Accordingly, obstacles may be built into the tail end such that the erase signal is further attenuated when the stylus is tilted at predetermined angles.

[0056] At block **412**, the computing device adjusts the response to the stylus contact based upon the contact area, the signal strength, or both. That is, the computing device may adjust its response to the stylus contact, such as by varying the width of the erase stroke, the strength of the erase stroke, or some other response or combination of responses.

[0057] With reference to FIGS. **5***a* and **5***b*, another example of a digital eraser **506** is illustrated. The illustrated implementation shows a simplified cross-sectional schematic view of a digital eraser that is symmetrical about its axis. An eraser antenna **502** is housed with a cover **504**. The cover **504** defines one or more air gaps **506** that may surround the eraser antenna **502**. When the stylus is oriented perpendicular to the digitizer screen **508**, the eraser antenna **502** emits an erase signal from a location that is spaced a distance d**3** **510** away from the digitizer screen. The erase signal need only penetrate through the cover **504** and will be emitted at its maximum signal strength when in this orientation.

[0058] However, when the stylus is tilted at an angle θ **512** as shown in FIG. **5***b*, the erase signal is emitted from a location that is spaced a distance d**4** **514** from the digitizer screen **508**. The distance d**4** **514** is greater than the distance d**3** which results in erase signal attenuation. Moreover, because of the configuration of the cover **504** and the air gap **506**, the erase signal is further attenuated as it encounters additional barriers from the interface between the cover **504** and the air gap **506**.

[0059] The cover **504** may be configured with any number of air gaps **506** spaced in a variety of locations and patterns. Moreover, the air gap **506** may contain another material, other than air such as alternative gasses or solids, to cause further attenuation of the erase signal.

[0060] With reference to FIGS. **6***a* and **6***b*, another example of a digital eraser **606** is shown. An eraser antenna **602** may be configured in any shape and orientation within the tail end **606** of the stylus. As illustrated, the eraser antenna **602** may be shaped as a triangle, a cone, or a pyramid. A cover **604** houses the eraser antenna **602** and may be made of any suitable material. In some instances, the cover is formed of a conductive material, such as a conductive rubber, for example, to simulate the feel of a pencil eraser on paper, or may be formed of a dielectric material, such as rubber or plastic. The dielectric material may be any suitable insulative material that can be polarized by an applied electric field.

[0061] When the stylus is oriented orthogonally to the digitizer screen **606** as in FIG. **6***a*, the erase signal is emitted from a location that is spaced from the digitizer screen **606** a distance d**5** **608**. As shown in FIG. **6***b*, when the stylus is tilted at an angle θ **610**, the erase signal is emitted from a location that is spaced from the digitizer screen **606** a distance of d**6** **612**. Of course, the distance d**6** **612** is a function of the cover **604** geometry and the position of the eraser antenna **602** within the cover **604**. In many instances, the distance d**6** **612** is greater than the distance d**5** **608**, thus when the stylus is tilted at an angle θ **610**, the erase signal is attenuated and the computing device can detect the signal attenuation as a result of the stylus being tilted. Moreover, the computing device can estimate the angle of tilt θ **610** based upon the signal attenuation when compared with the baseline signal.

[0062] With reference to FIGS. **7***a* and **7***b*, another example of a digital eraser **706** is illustrated in which the cover **702** is asymmetrical about a longitudinal axis **704** of the stylus. For example, a protrusion **708** may extend from one or more portions of the cover **702** that affects the distance from the eraser antenna **710** to the digitizer screen **712**. As shown, the erase signal is emitted from a location that is spaced a distance of d**7** **714** from the digitizer screen **712**.

[0063] As further illustrated in FIG. **7***a*, the eraser antenna **710** may be located off-center with respect to the longitudinal axis **704** of the stylus, thus allowing for distinct signal profiles depending on the tilt and rotation of the stylus. In a substantially orthogonal orientation to the digitizer screen **712**, as shown, the surface contact area **716** between the cover **702** and the digitizer screen **712** is limited to the shape of the end of the protrusion and is illustrated in FIG. **7***b*.

[0064] Based upon the erase signal strength and/or the surface contact area **714**, the computing device may initiate an erase function having the size and shape of the surface area contact **714**. However, if the stylus is rotated such that a smaller portion of the protrusion **708** contacts the digitizer screen **712**, the erase function may have a correspondingly smaller size and shape, or may alter the opacity of (e.g., the strength of) the erase function.

[0065] With reference to FIG. **7***c*, the digital eraser **706** is tilted at an angle θ **718** with respect to the digitizer screen **712**. In this orientation, the erase signal is emitted from a location that is spaced a distance d**8** **720** from the digitizer screen **712**. In this configuration, the distance d**8** **720** is greater than the distance d**7** **714** and the erase signal will therefore be attenuated as compared to the signal strength when the stylus is in the orientation shown in FIG. **7***a*. The computing device may receive data that indicates the geometry of the digital eraser **706** and may thus determine that the stylus is tilted at approximately angle θ **718** based upon the erase signal strength.

[0066] With additional reference to FIG. **7***d*, when the stylus is tilted at an angle θ **718**, the surface contact area **722** will be substantially smaller than the surface contact area **716** as shown in FIG. **7***b*. Accordingly, the computing device may initiate an erase function that is much finer than if there were a larger surface contact area between the cover **708** and the digitizer screen **712**. For example, where the cover **712** is only contacting the digitizer screen **712** along and edge thereof, the erase function may include a reduced opacity and/or a reduced size of the erase area. Of course, other functions may be assigned based upon the signal strength and the surface contact area.

[0067] With reference to FIG. **7***e*, when the stylus is tilted at an angle λ **724**, the erase signal is emitted from a location that is spaced a distance d**9** **726** from the digitizer screen **712**. Depending on the configuration of the cover **702** and the position of the eraser antenna **710**, the distance d**9** **726** may be less than the distance d**7** **714** when in an orthogonal orientation as shown in FIG. **7***a*. As such, the erase signal strength may be stronger when oriented as in FIG. **7***e* than when oriented as in FIG. **7***a*. The geometry of the cover **702** and the location of the eraser antenna **710** may be selected to provide any desirable erase signal strength based upon the tilt and rotation of the stylus.

[0068] With reference to FIG. **7***f*, when the digital eraser **706** is oriented as in FIG. **7***e*, the surface contact area **728** is relatively small since only a portion of the edge of the cover **702** is in contact with the digitizer screen **712**. In response, the computing device may initiate an erase function having a correspondingly small erase area and/or a reduce opacity when compared to an erase function initiated as a result of greater surface area contact between the cover **702** and the digitizer screen **712**.

[0069] With reference to FIG. **8***a*, a digital eraser **806** may have a cover **802** that is asymmetrical about a longitudinal axis of the stylus. The cover **802** may further be configured with a sharp edge **804** and/or a rounded edge **806**. The difference in edge configurations may provide distinct surface contact areas with the digitizer screen and may be used by the computing device to initiate erase functions with differing parameters (i.e., size, shape, and/or opacity).

[0070] An eraser antenna **808** may be located off-center within the cover **802**. When configured this way, as the stylus is held at a constant angle with respect to the digitizer screen, rotating the stylus will result in the erase signal strength varying as the eraser antenna **808** moves closer to, or further away from, the digitizer screen. The computing device may thus initiate erase functions having various parameters as a result of the rotation of the stylus, in addition to the tilt of the stylus.

[0071] While the computing device may be able to detect the approximate tilt and/or the approximate rotation of the stylus, the detection need not be highly accurate. In other words, it may not be important to determine whether the stylus is tilted at 20 degrees versus 22 degrees. The computing device may be able to detect when the tilt of the stylus is within a predetermined range. For example, the tilt detection may be highly granular, and may only be able to determine the approximate tilt of the stylus within 30 degree increments. That is, the computing device may be able to determine when the stylus is tilted at an angle between zero and thirty degrees, or between thirty and sixty degrees, or between sixty and ninety degrees. The increment of detection may be every ten degrees, or twenty degrees, or forty-five degrees, or some other desirable increment.

[0072] FIG. **8***b* illustrates the surface contact area **810** of the cover **802** geometry of FIG. **8***a*. As shown, the surface contact area **810** can vary from a maximum of the tear drop shape, as illustrated, to a minimum of a point contact when only the sharp tip **812** of the cover **802** contacts the digitizer screen. In use, as the stylus is rotated about its longitudinal axis, the surface contact area may change as well as the strength of the erase signal depending on the rotational orientation of the stylus.

[0073] With reference to FIG. **9***a*, a digital eraser **906** may have a cover **902** that is generally hemispherical and may house an eraser antenna **904**. The cover **902** may be formed of a material having a relatively high elasticity such that it is deformable against the digitizer screen when an erasing force is applied. Consequently, as the cover **902** elastically deforms in response to an erasing force, the distance between the eraser antenna **904** and the digitizer screen changes, thus changing the strength of the erase signal emitted from the eraser antenna **904**. The change in signal strength due to elastic deformation of the cover **902** may be used to infer a strength of an erasing function.

[0074] FIG. **9***b* illustrates the surface contact area **908** between the cover **902** and the digitizer screen as an erasing force is applied to the stylus to force the cover **902** against the digitizer screen. As the cover **902** deforms, the surface contact area **908** increases in a circular shape. The size of the surface contact area **908** may likewise be used to infer an erasing pressure and therefore be used to determine the parameters of the erasing function.

[0075] With reference to FIG. **10***a*, a digital eraser **1006** may have a cover **1002** that is asymmetrical and houses an eraser antenna **1004**. The illustrated cover may be generally circular when viewed from the top (e.g., and end view of the stylus) of the cover; however, it may define an oblique surface **1008**. The cover **1002** may have an acute edge **1010**

that defines an acute angle between the longitudinal axis of the stylus and the oblique surface **1008**. As such, multiple surface contact area profiles may be used to vary the surface contact with the digitizer screen to result in functions having differing parameters.

[0076] For example, when the digital eraser **1006** is held in a substantially orthogonal orientation with respect to the digitizer screen, only the acute edge **1010** of the cover **1002** will make contact with the digitizer screen. An erase function may be initiated that includes a high degree of precision (e.g., fineness) to erase a path of adjacent pixels as the cover **1002** moves across the digitizer screen. Alternatively, or additionally, the erase function may vary the opacity of the erase function to only partially remove the information from the digitizer screen.

[0077] When the digital eraser **1006** is tilted such that the oblique surface **1008** makes surface contact with the digitizer screen, the surface contact area **1012** may resemble an ellipse, as shown in FIG. **10***b*. The surface contact area **1012** may then be detected by the digitizer screen and an erase function may be initiated having a relatively large erase area, that is, pixels associated with the erase area may be erased in a relatively wide swath as the cover **1002** moves across the digitizer screen.

[0078] In some instances, the configuration of the components illustrated in FIG. **10***a* may be a digital marker. That is, the eraser antenna **1004** may output a signal indicating that the computing device should interpret the wireless and touch signals from the digital eraser **1006** as an ink input. For example, the digital eraser **1006** could be used as a marker to input either fine strokes when using the acute edge **1010** or broad strokes when using the oblique surface **1008** to contact the digitizer screen. By changing the erase signal to a inking signal, or by a setting within the computing device that interprets the erase signal as an inking signal, the tail end of the stylus can be used to input information into the computing device.

Example Clauses

[0079] In some implementations, a system for erasing digital ink comprises a stylus having a tail end, wherein the tail end comprises an eraser antenna configured to emit an erase signal, and a cover that houses the eraser antenna and a computing device having a touch-screen. The computing device further comprises a signal strength meter, the signal strength meter configured to detect a strength of the erase signal and a microcontroller. In some examples, the microcontroller may be configured to determine, based upon the strength of the erase signal, a tilt of the stylus; and initiate an erase function, wherein at least one of a width, an area, or an opacity of the erase function is based at least in part upon the tilt of the stylus.

[0080] In some examples, the cover is asymmetrical about a longitudinal axis of the stylus. The cover may be configured to position the eraser antenna at a first distance from the touch-screen when the stylus is tilted to a first position and to position the eraser antenna at a second distance from the touch-screen when the stylus is tilted to a second position.

[0081] The cover may be configured to position the eraser antenna at a first distance from the touch-screen when the stylus is rotated to a first orientation about a longitudinal axis of the stylus and to further position the eraser antenna at a second distance from the touch-screen when the stylus is rotated to a second orientation about the longitudinal axis of the stylus. The width, the area, or the opacity of the erase function may be based at least in part upon a surface area of the cover contacting the touch-screen.

[0082] In some examples, the eraser antenna is located off-center with respect to a longitudinal axis of the stylus.

[0083] According to other examples, a stylus for a computing device includes an elongate barrel, the elongate hollow barrel having a longitudinal axis and further having a writing end and a tail end. The tail end may include an eraser antenna and a cover configured to house the eraser antenna, wherein the cover is asymmetrical about the longitudinal axis.

[0084] The cover may be configured to locate the eraser antenna a first distance away from a digitizer screen when the stylus is rotated about the longitudinal axis to a first orientation and to locate the eraser antenna a second distance away from the digitizer screen when the stylus is rotated about the longitudinal axis to a second orientation.

[0085] In some instances, the cover defines an internal air gap configured to attenuate an erase signal emitted from the eraser antenna. The cover may be formed of a resilient dielectric material.

[0086] In some examples, the cover may be configured to locate the eraser antenna a first distance away from a digitizer screen when the stylus is tilted at a first angle and to locate the eraser antenna a second distance away from the digitizer screen when the stylus is tilted at a second angle.

[0087] The eraser antenna may be located off-center with respect to the longitudinal axis. In other examples, the cover may define a protrusion extending from the tail end in a direction generally parallel to the longitudinal axis.

[0088] In use, a method for erasing digital ink may include receiving an erase signal from a digital eraser; determining a signal strength associated with the erase signal; and initiating an erase function that includes one or more of a shape, a size, or an opacity based at least in part upon the signal strength associated with the erase signal.

[0089] A contact area between the digital eraser and the digitizer screen may be detected and the erase function is based at least in part upon the contact area between the digital eraser and the digitizer screen.

[0090] A tilt of the digital eraser with respect to the digitizer screen may be determined based upon one or more of the signal strength or the contact area. The erase function may be based in part upon the tilt of the digital eraser with respect to the digitizer screen.

[0091] The signal strength or the contact area may be used to determine the rotation of the digital eraser with respect to the digitizer screen. The erase function may be based at least in part upon the rotation of the digital eraser.

[0092] In some instances, the erase signal may be changed to an inking signal. In which case, the computer device may receive the inking signal, determine the strength of the inking signal, and initiate an inking function that includes one or more of a shape, a size, or an opacity based at least in part upon a signal strength associated with the inking signal.

CONCLUSION

[0093] Although the present disclosure may use language that is specific to structural features and/or methodological acts, the invention is not limited to the specific features or

acts described herein. Rather, the specific features and acts are disclosed as illustrative forms of implementing the invention.

What is claimed is:

1. A system for erasing digital ink, comprising:

a stylus having a tail end, wherein the tail end comprises an eraser antenna configured to emit an erase signal, and a cover that houses the eraser antenna; and

a computing device having a touch-screen, the computing device further comprising:

a signal strength meter, the signal strength meter configured to detect a strength of the erase signal; and

a microcontroller configured to:

determine, based upon the strength of the erase signal, a tilt of the stylus; and

initiate an erase function, wherein at least one of a width, an area, or an opacity of the erase function is based at least in part upon the tilt of the stylus.

2. The system as in claim **1**, wherein the cover is asymmetrical about a longitudinal axis of the stylus.

3. The system as in claim **1**, wherein the cover is configured to position the eraser antenna at a first distance from the touch-screen when the stylus is tilted to a first position and to position the eraser antenna at a second distance from the touch-screen when the stylus is tilted to a second position.

4. The system as in claim **1**, wherein the cover is configured to position the eraser antenna at a first distance from the touch-screen when the stylus is rotated to a first orientation about a longitudinal axis of the stylus and to further position the eraser antenna at a second distance from the touch-screen when the stylus is rotated to a second orientation about the longitudinal axis of the stylus.

5. The system as in claim **1**, wherein at least one of the width, the area, or the opacity of the erase function is based at least in part upon a surface area of the cover contacting the touch-screen.

6. The system as in claim **1**, wherein the eraser antenna is located off-center with respect to a longitudinal axis of the stylus.

7. A stylus for a computing device, the stylus comprising:

an elongate barrel, the elongate hollow barrel having a longitudinal axis and further having a writing end and a tail end, the tail end comprising:

an eraser antenna; and

a cover configured to house the eraser antenna, wherein the cover is asymmetrical about the longitudinal axis.

8. The stylus as in claim **7**, wherein the cover is configured to locate the eraser antenna a first distance away from a digitizer screen when the stylus is rotated about the longitudinal axis to a first orientation and to locate the eraser antenna a second distance away from the digitizer screen when the stylus is rotated about the longitudinal axis to a second orientation.

9. The stylus as in claim **7**, wherein the cover defines an internal air gap configured to attenuate an erase signal emitted from the eraser antenna.

10. The stylus as in claim **7**, wherein the cover is formed of a resilient dielectric material.

11. The stylus as in claim **7**, wherein the cover is configured to locate the eraser antenna a first distance away from a digitizer screen when the stylus is tilted at a first angle and to locate the eraser antenna a second distance away from the digitizer screen when the stylus is tilted at a second angle.

12. The stylus as in claim **7**, wherein the eraser antenna is located off-center with respect to the longitudinal axis.

13. The stylus as in claim **7**, wherein the cover defines a protrusion extending from the tail end in a direction generally parallel to the longitudinal axis.

14. A method for erasing digital ink, comprising:

receiving an erase signal from a digital eraser;

determining a signal strength associated with the erase signal; and

initiating an erase function that includes one or more of a shape, a size, or an opacity based at least in part upon the signal strength associated with the erase signal.

15. The method as in claim **14**, further comprising determining a contact area between the digital eraser and the digitizer screen, wherein initiating the erase function is based at least in part upon the contact area between the digital eraser and the digitizer screen.

16. The method as in claim **15**, further comprising determining, based upon one or more of the signal strength or the contact area, a tilt of the digital eraser with respect to the digitizer screen.

17. The method as in claim **16**, wherein the erase function is based at least in part upon the tilt of the digital eraser with respect to the digitizer screen.

18. The method as in claim **15**, further comprising determining, based upon one or more of the signal strength or the contact area, a rotation of the digital eraser with respect to the digitizer screen.

19. The method as in claim **18**, wherein the erase function is based at least in part upon the rotation of the digital eraser.

20. The method as in claim **14**, further comprising:

changing the erase signal to an inking signal;

receiving the inking signal;

determining a signal strength associated with the inking signal; and

initiating an inking function that includes one or more of a shape, a size, or an opacity based at least in part upon a signal strength associated with the inking signal.

* * * * *