US 20180090730A1

(19) United States

(12) Patent Application Publication

(10) Pub. No.: US 2018/0090730 A1

(43) Pub. Date: Mar. 29, 2018

Ai

(54) FLEXIBLE BATTERY STRUCTURE

(71) Applicant: **Apple Inc.**, Cupertino, CA (US)

(72) Inventor: **Jiang Ai**, San Jose, CA (US)

(21) Appl. No.: **15/713,537**

(22) Filed: **Sep. 22, 2017**

Related U.S. Application Data

(60) Provisional application No. 62/399,298, filed on Sep. 23, 2016.

Publication Classification

(51) **Int. Cl.**

H01M 2/10	(2006.01)
H05K 5/00	(2006.01)
H05K 5/02	(2006.01)

(52) **U.S. Cl.**

CPC ***H01M 2/1061*** (2013.01); ***H05K 5/0086*** (2013.01); ***H05K 5/0217*** (2013.01); ***H05K 5/0017*** (2013.01)

(57) **ABSTRACT**

A number of different battery cell configurations are disclosed. Flexible battery cells are used to form a flexible structure capable of bending and flexing to accommodate movement of components of an electronic device. In some embodiments, the flexible battery cells can include cathode and anode layers joined together by a separator.

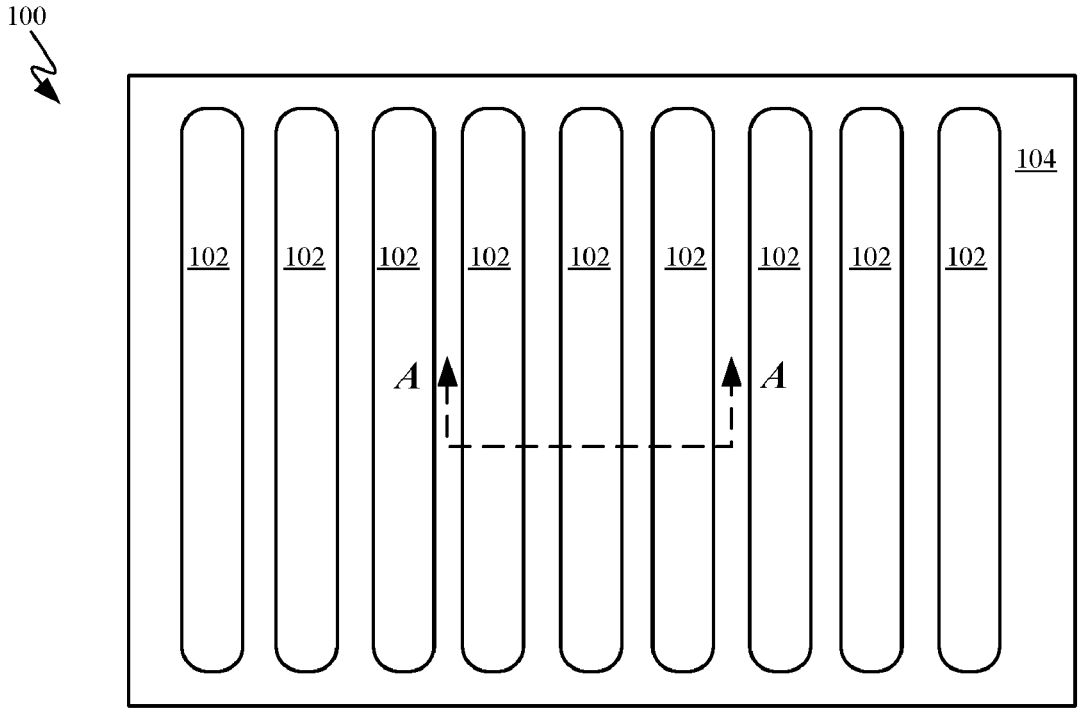

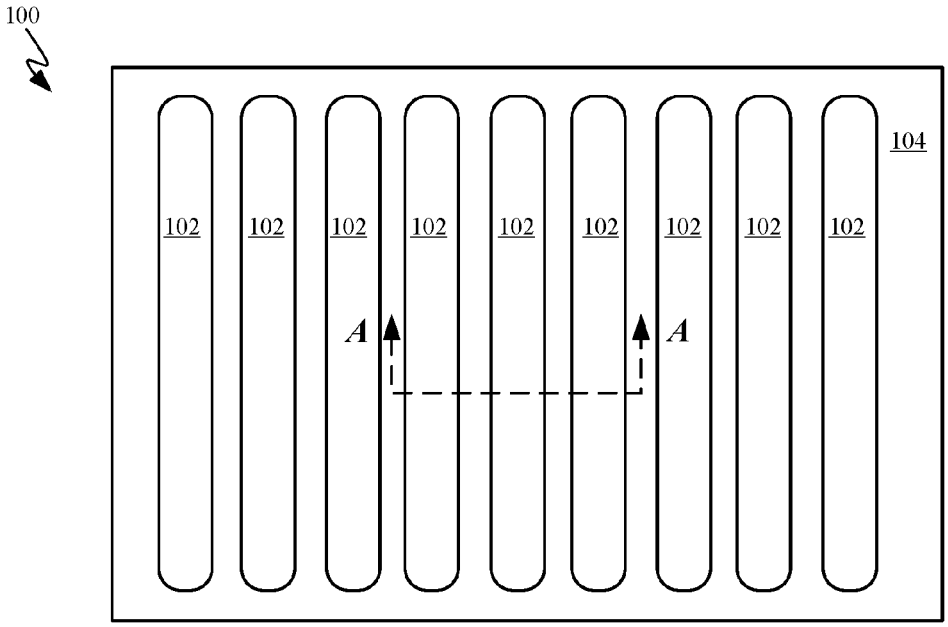

FIG. 1A

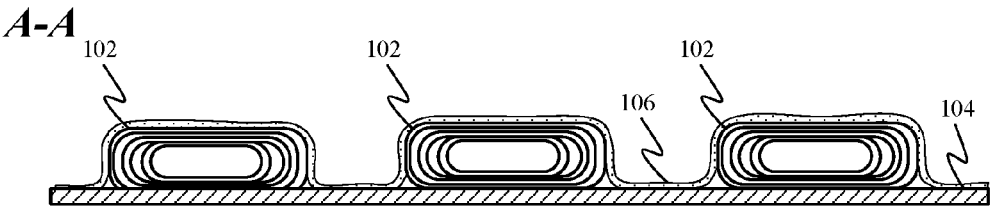

FIG. 1B

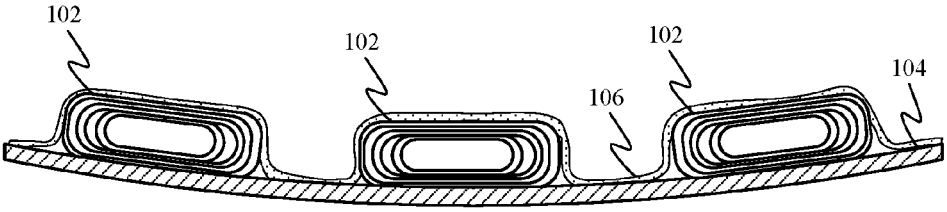

FIG. 1C

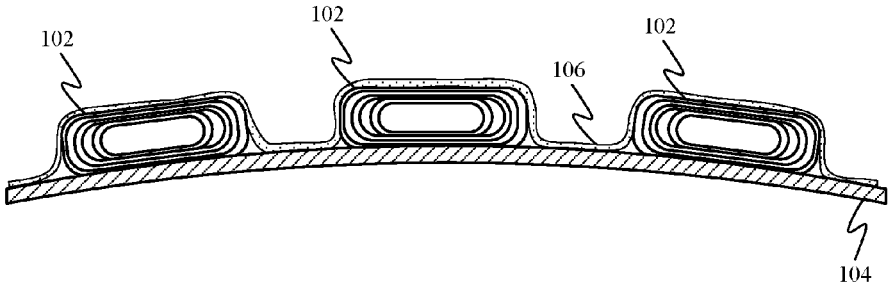

FIG. 1D

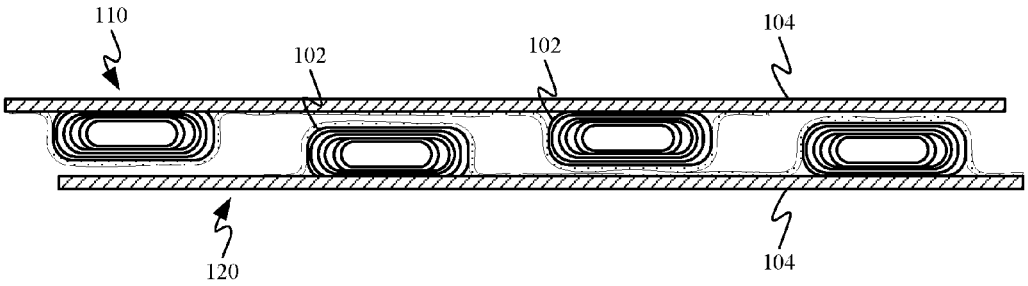

FIG. 1E

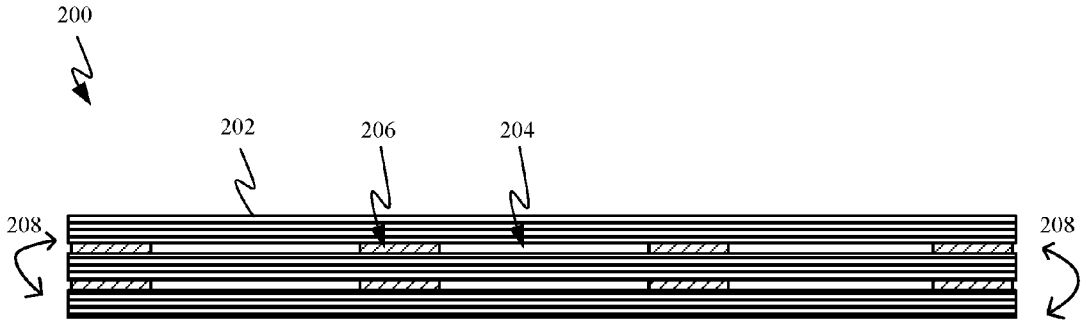

FIG. 2A

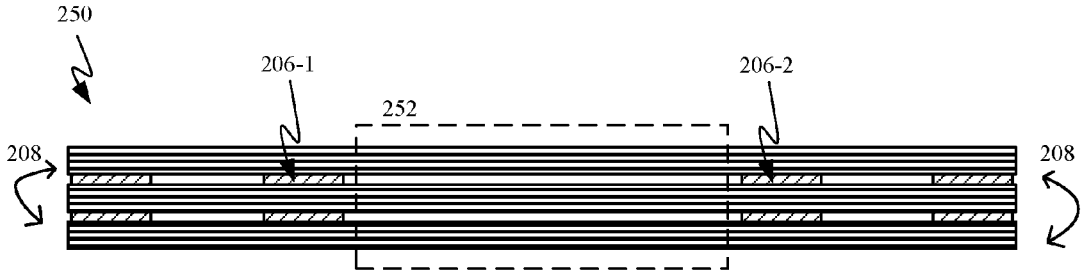

FIG. 2B

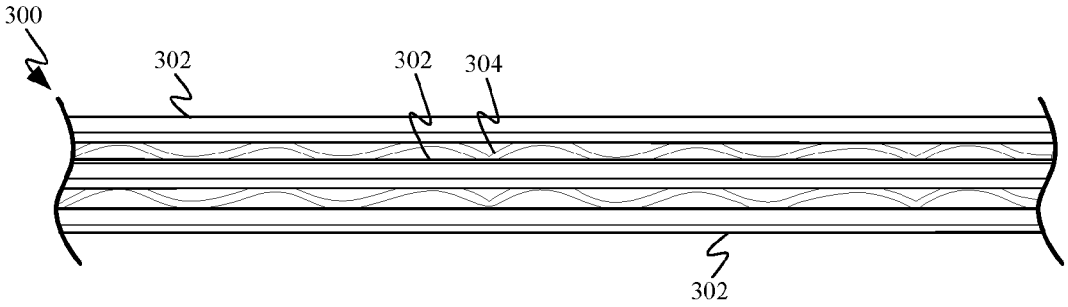

FIG. 3A

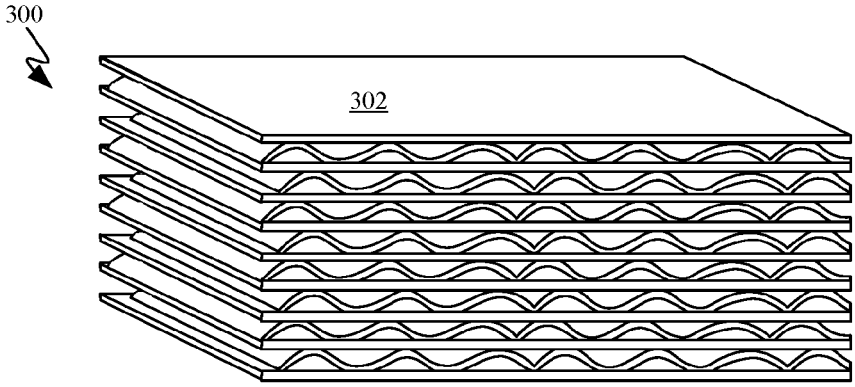

FIG. 3B

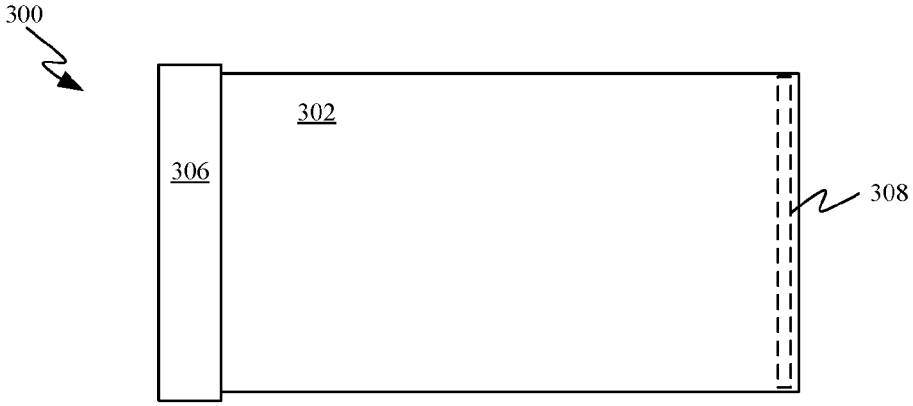

FIG. 3C

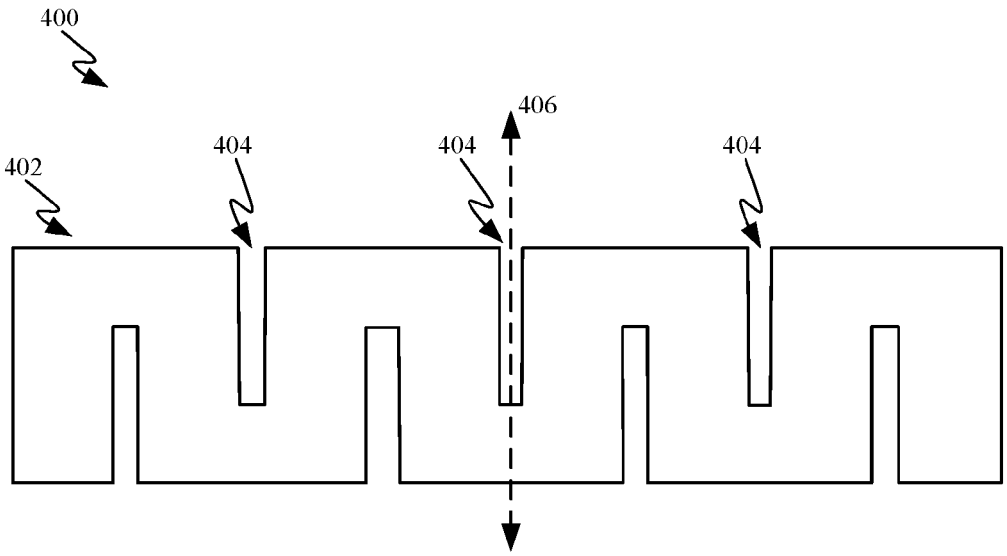
400
402
404
404
404
406

FIG. 4A

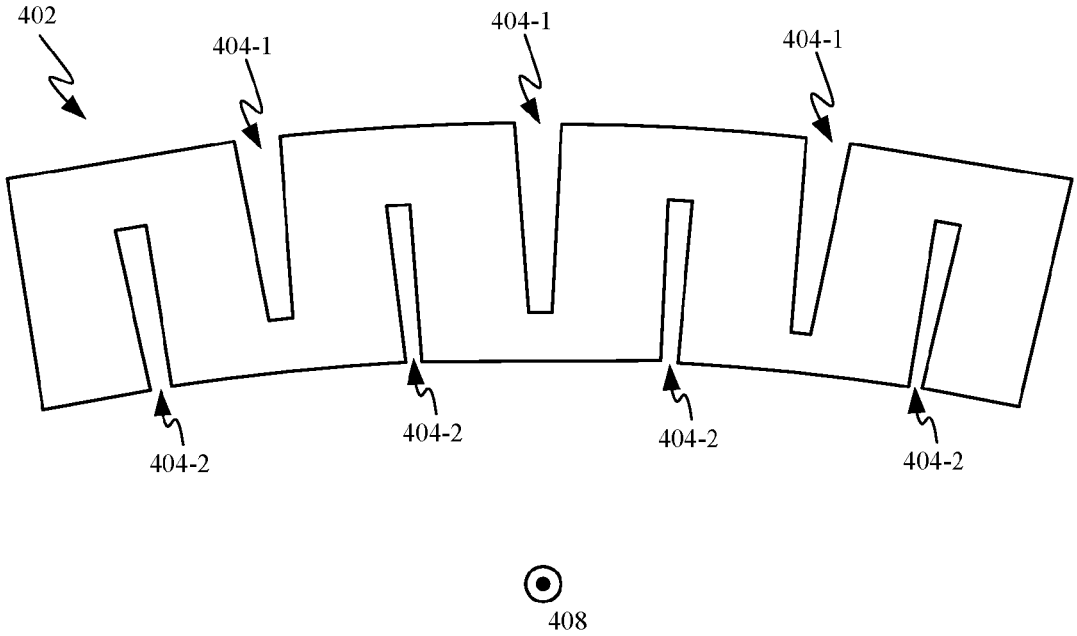
402
404-1
404-1
404-1
404-2
404-2
404-2
404-2
408

FIG. 4B

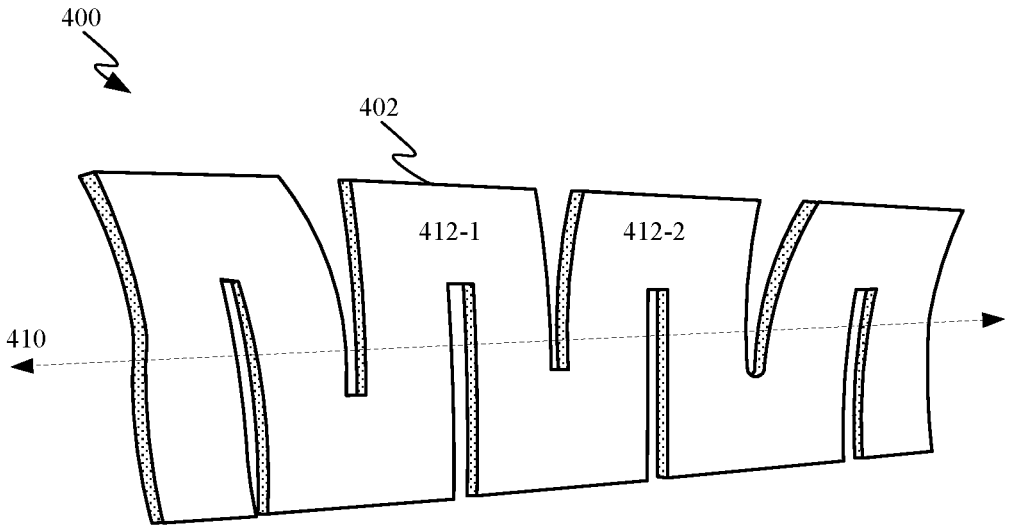

FIG. 4C

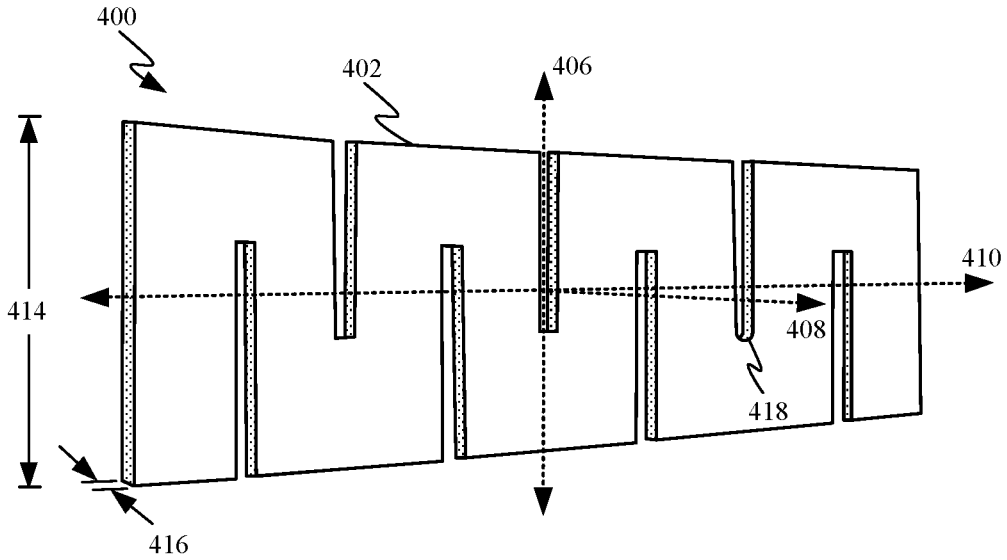

FIG. 4D

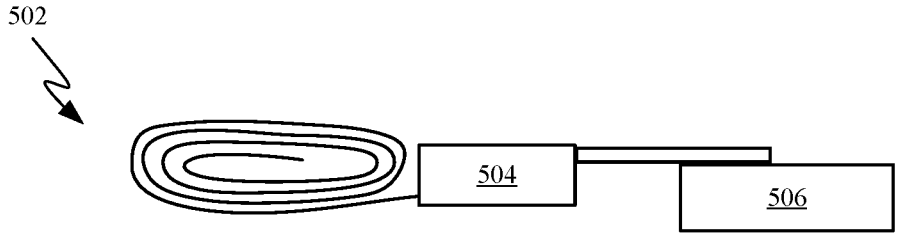

FIG. 5A

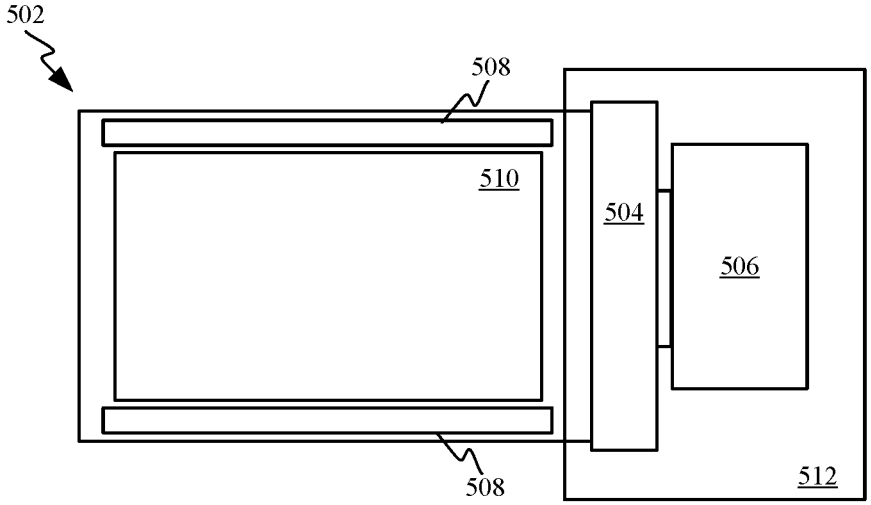

FIG. 5B

FLEXIBLE BATTERY STRUCTURE

CROSS-REFERENCES TO RELATED APPLICATIONS

[0001] This application claims priority to U.S. Provisional Patent Application No. 62/399,298, filed on Sep. 23, 2016 and entitled "FLEXIBLE BATTERY STRUCTURE", the disclosure of which is hereby incorporated by reference in its entirety for all purposes.

FIELD

[0002] This disclosure relates generally to flexible batteries. In particular, a number of laminated flexible battery structures are disclosed.

BACKGROUND

[0003] Batteries often take up a substantial amount of space in a portable electronic device. As devices have grown increasingly more power hungry, greater amounts of space need to be dedicated to accommodate space for the batteries. In addition to taking up space, the batteries are also often quite rigid, often making placement of the batteries in portions of a device designed to bend impractical. For this reason, it would be desirable to have

SUMMARY

[0004] This disclosure describes various embodiments that relate to a flexible battery.

[0005] A flexible battery is disclosed and includes the following: a flexible substrate; and battery cells distributed across the flexible substrate, each of the batter cells extending across a portion of the flexible substrate and aligned so that each of the battery cells is substantially parallel with the other battery cells. The battery cells are separated from adjacent battery cells by an interval that allows the flexible substrate to bend about one axis.

[0006] A flexible battery is disclosed and includes the following: a first stack of flexible battery cells; a second stack of flexible battery cells; and spacing elements positioned between and coupling the first and second stacks of flexible battery cells, the spacing elements creating multiple air gaps between the first and second stacks of battery cells.

[0007] A battery is disclosed and includes the following: flexible battery cells arranged in a stack and having a serpentine geometry that accommodates bending of the flexible battery cells about three orthogonal axes, each one of the flexible battery cells comprising: an anode layer; a cathode layer; and a separator joining the anode layer to the cathode layer.

[0008] An electronic device is disclosed and includes the following: a flexible housing member; and a flexible battery disposed within the flexible housing member, the flexible battery comprising: flexible battery cells arranged in a stack and defining stress-relieving gaps that accommodate bending of the flexible battery cells about multiple axes of rotation, each one of the flexible battery cells comprising an anode layer, a cathode layer and a separator disposed between the anode and cathode layers.

[0009] An electronic device is disclosed and includes the following: a device housing; a display assembly, comprising: a flexible display; and flexible battery cells arranged in a stack and having a serpentine geometry that accommodates bending of the flexible battery cells about three orthogonal axes, each one of the flexible battery cells comprising: an anode layer; a cathode layer; and a separator joining the anode layer to the cathode layer.

[0010] Other aspects and advantages of the invention will become apparent from the following detailed description taken in conjunction with the accompanying drawings which illustrate, by way of example, the principles of the described embodiments.

BRIEF DESCRIPTION OF THE DRAWINGS

[0011] The disclosure will be readily understood by the following detailed description in conjunction with the accompanying drawings, wherein like reference numerals designate like structural elements, and in which:

[0012] FIG. **1**A shows a top view of a layer of a flexible battery;

[0013] FIG. **1**B shows a cross-sectional view of the layer depicted in FIG. **1**A in accordance with section line A-A;

[0014] FIGS. **1**C-**1**D show how the layer is capable of bending in two directions;

[0015] FIG. **1**E shows how two layers can be stacked together without taking up substantially more room than one layer would take up;

[0016] FIG. **2**A shows an alternative flexible battery that includes multiple layers;

[0017] FIG. **2**B shows a flexible battery with a larger interval between some spacing elements than other spacing elements;

[0018] FIGS. **3**A-**3**C show various views of a flexible battery having a corrugated structure;

[0019] FIG. **4**A shows a top view of a flexible battery cell;

[0020] FIG. **4**B shows how stress relieving gaps accommodate bending of the flexible battery cell depicted in FIG. **4**A;

[0021] FIGS. **4**C-**4**D show perspective views of the flexible battery cell depicted in FIGS. **4**A-**4**B;

[0022] FIG. **5**A shows a side view of an exemplary electronic device **500** suitable for use with the described embodiments; and

[0023] FIG. **5**B shows how a flexible display assembly can include a flexible battery.

DETAILED DESCRIPTION

[0024] Representative applications of methods and apparatus according to the present application are described in this section. These examples are being provided solely to add context and aid in the understanding of the described embodiments. It will thus be apparent to one skilled in the art that the described embodiments may be practiced without some or all of these specific details. In other instances, well known process steps have not been described in detail in order to avoid unnecessarily obscuring the described embodiments. Other applications are possible, such that the following examples should not be taken as limiting.

[0025] In the following detailed description, references are made to the accompanying drawings, which form a part of the description and in which are shown, by way of illustration, specific embodiments in accordance with the described embodiments. Although these embodiments are described in sufficient detail to enable one skilled in the art to practice the described embodiments, it is understood that these examples are not limiting; such that other embodiments may be used,

and changes may be made without departing from the spirit and scope of the described embodiments.

[0026] Portable electronic devices generally use a battery to provide the power to carryout various functions when not receiving external power. Unfortunately, as the functionality of portable electronic devices has grown so has the size of the batteries needed to keep the devices functioning over the course of a day. A battery typically used in a portable electronic device tends to occupy a large volume within the device. When the battery is rigid and unable to withstand substantial amounts of bending, the substantial portion of the device that surrounds the battery is also unable to bend.

[0027] A battery can be formed using flexible battery cells. The flexible battery cells can be created using a flexible film design. In some embodiment, the flexible film design can take the form of a prismatic cell. The prismatic cell can include a flexible cathode layer separated from a flexible anode layer by a flexible separator. The prismatic cells are combined to form a battery by stacking the flexible battery cells or rolling the flexible battery cells up into a cylinder. While this does offer more variations in shape than a conventional battery, the final shape of the battery still tends to be fairly rigid.

[0028] One solution to this problem is to separate the flexible battery cells into discrete regions. For example, the flexible battery cells can be rolled up into discrete cylinders and then distributed across a flexible substrate. Depending on the interval between the discrete cylinders and diameter of the discrete cylinders, the resulting battery can be flex about at least one axis. In some embodiments, a stack of flexible battery cells can be interspersed with air gaps that allow for a greater amount of flexibility of the resulting flexible battery. In some embodiments, a battery cell can be formed from a stack of flexible battery cells that are die cut to allow the resulting flexible battery to bend and flex about multiple axes.

[0029] In general, the size and density of the flexible battery cells within the flexible battery can be adjusted to suit the application. For example, a flexible battery designed to accommodate a feature that folded in one location could have a different design than a flexible battery designed to be incorporated into a flexible sheet subject to bending, folding or rolling in any number of directions.

[0030] These and other embodiments are discussed below with reference to FIGS. **1**A-**5**B; however, those skilled in the art will readily appreciate that the detailed description given herein with respect to these figures is for explanatory purposes only and should not be construed as limiting.

[0031] FIG. **1**A shows a top view of a layer **100** of a flexible battery. Layer **100** includes an arrangement of battery cells **102** distributed across flexible substrate **104**. Each of battery cells **102** can be elongated and oriented in the same direction. The interval between adjacent battery cells **102** allows the layer to bend.

[0032] FIG. **1**B shows a cross-sectional view of layer **100** in accordance with section line A-A. Battery cell **102** is depicted as flexible battery cell rolled up into a flattened, cylindrical geometry and laminated between flexible substrate **104** and a protective layer **106**. It should be noted that while a flexible battery cell is depicted, other less flexible battery cell technologies that fit into a similar space could also be used in this embodiment.

[0033] FIGS. **1**C-**1**D show how layer **100** is capable of bending in two directions. The rigidity of battery cells **102** would tend to prevent bending or folding of layer **100** about an axis that crossed two or more of battery cells **102**. FIG. **1**E shows how layers **110** and **120** can be stacked together without taking up substantially more room than one layer would take up. A flexible battery could include numerous layers of battery cells. For example, in some embodiments, each of the layers could be between 100 and 200 microns in thickness while the layers could combine to take up 2 to 3 mm in thickness.

[0034] FIG. **2**A shows an alternative flexible battery **200** that includes multiple layers **202**. Each of layers **202** can include multiple flexible battery cells stacked together in a sheet. In some embodiments, the battery cells can be laminated together by a pressure sensitive adhesive (PSA) that has a particularly low Young's Modulus on the order of about 0.5 MPa, which allows the laminated battery cells to shift in relation to each other without generating substantial amounts of inter-cell stress. In order to maintain a flexibility of flexible battery **200**, air gaps **204** can be distributed between layers **202** of flexible battery **200**. Spacing elements **206** can be interspersed between layers **202** in order to establish air gaps **204**. Air gaps accommodate bending of flexible battery in accordance with arrows **208**.

[0035] FIG. **2**B shows a flexible battery **250** with a larger interval between spacing elements **206-1** and **206-2** than between other spacing elements **206**. This results in a flexible region **252** that can more easily accommodate folding and/or bending of flexible battery **250**. This can be helpful for use in a device having a well-defined fold line.

[0036] FIGS. **3**A-**3**C show various views of a flexible battery **300** having a corrugated structure. FIG. **3**A shows a cross-sectional side view of a portion of flexible battery **300**, which includes multiple flexible battery cell layers **302**. Corrugated or serpentine flexible battery cells **304** are positioned between each of flexible battery cell layers **302**. Each one of serpentine flexible battery cells **304** creates an air gap between flexible battery cell layers **302**. A shape of flexible serpentine battery cells **304** creates the air gap and by securing serpentine battery cells **304** to peripheral portions of flexible battery **300** a substantially unconstrained air gap can be created between each of the flexible battery cell layers. FIG. **3**B shows a perspective view of a portion of flexible battery **300** and illustrates how a cross-section of each of flexible battery cells **304** have a substantially constant cross-sectional geometry for maintaining the gaps between flexible battery cell layers **302** and keeping flexible battery cell layers **302** substantially parallel to one another.

[0037] FIG. **3**C shows a top view of flexible battery **300**. Flexible battery **300** includes a battery management unit (BMU) **306** on one side of flexible battery **300**. BMU **306** can be configured to control the operation of flexible battery **300**. BMU **306** can also be operable to connect flexible battery to components utilizing power from flexible battery **300** and to components providing power to charge flexible battery **300**. BMU **306** can be clamped to and constrain one end of flexible battery cell layers **302** and serpentine flexible battery cells **304**. The opposite end of battery cell layers **302** and serpentine flexible battery cells can be joined together in attachment region **308**, so that opposing sides of the battery cell layers are joined together. In some embodiments, an entire periphery of each of flexible battery cell layers **302** and serpentine flexible battery cells **304** can be joined together.

[0038] FIG. **4**A shows a top view of a flexible battery **400**. Flexible battery **400** can be made up of a stack of flexible battery cells **402** that are die cut to define stress-relieving gaps **404**. Each additional flexible battery cell **402** can increase the amount of energy flexible battery **400** is able to retain while also increasing the size and reducing the overall flexibility of flexible battery **400**. Stress relieving gaps **404**, staggered along a length of flexible battery **400**, give flexible battery **400** a serpentine geometry accommodating bending about multiple axes of rotation. This type of configuration also allows adjacent portions of flexible battery cell **402** to bend in opposite directions to conform with various internal geometries of an electronic device associated with flexible battery cell **402**. Notches defined by flexible battery cell **402** can take the form of stress relieving gaps **404** and can reduce residual stress build up that would otherwise result from bending flexible battery cell **402** in certain directions. Flexible battery **400** can bend around first axis of rotation **406**. Flexible battery **400** accommodates the bending about axis **406** on account of axis of rotation **406** being aligned with one of stress-relieving gaps **404**. Furthermore, flexible battery **400** could bend around an axis of rotation aligned with any of stress-relieving gaps **404**.

[0039] FIG. **4**B shows how stress-relieving gaps **404-1** spread apart and stress relieving gaps **404-2** shrink to accommodate bending of flexible battery cell **402** about a second axis of rotation **408**, which is oriented orthogonally with respect to first axis of rotation **406**. Flexible battery **400** could also bend around an axis of rotation parallel to second axis of rotation **408** and positioned on an opposite side of flexible battery **400** from axis of rotation **408**. Bending about flexible battery **400** in this way, stress-relieving gaps **404-1** would close up and stress-relieving gaps **404-2** would open to accommodate the bending.

[0040] FIGS. **4**C-**4**D show perspective views of flexible battery **400**. FIG. **4**C shows how stress-relieving gaps **404** can accommodate twisting of flexible battery **400** about a third axis of rotation **410** As described above, stress-relieving gaps **404** can help accommodate bending and twisting of flexible battery cells **402**. In this configuration, adjacent curved segments **412-1** and **412-2** of flexible battery cell **402** can bend in different directions about axis of rotation **410**. In some embodiments, where flexible battery **400** is formed from a larger number of flexible battery cells **402** a size of stress-relieving gaps **404** can be increased to help maintain the flexibility of flexible battery **400**. For example, increasing the depth of stress-relieving gaps **404** can reduce the amount of resistance to bending flexible battery **400** about third axis of rotation **410**. In some embodiments, stress relieving gaps **404** could extend up to 90% of the way across a height of flexible battery **400**.

[0041] FIG. **4**D shows flexible battery cell **402** can have a height **414** of about 2-3 mm and a thickness **416** of about 100-200 microns. In some embodiments, these numbers could be scaled with the same ratio of thickness **416** being about one tenth of height **414**. It should be noted that while stress relieving gaps **404** are depicted as being rectangular in shape that the size and shape of stress-relieving gaps **404** can vary widely based on the application. For example, the corners of stress relieving gaps **404** could be rounded as depicted by rounded end **418** to reduce concentrations of force while bending or twisting flexible battery **400**. FIG. **4**D also shows orthogonal axes of rotation **406**, **408** and **410** around any one of which or all of which flexible battery **400** can bend.

[0042] It should be understood that in some embodiments, the different flexible battery features can be combined to obtain desirable flexibility in specific areas of a battery. For example, a corrugated battery could also include some layers with spacing elements designed to keep the various layers more tightly bound to one another.

[0043] FIG. **5**A shows a side view of an exemplary electronic device **500** suitable for use with the described embodiments. Electronic device **500** can include flexible display **502**, which is coupled to BMU **504** and BMU **504** is coupled to main logic board **506**. BMU **504** can be configured to control the operation of a flexible battery integrated within flexible display **502**. In some embodiments, flexible display **502** can include thin layers of graphite designed to dissipate and spread heat generated by operation of a display of flexible display assembly **502** and usage of the integrated flexible battery. The flexible battery can be distributed across flexible display **502** and allow flexible display **502** to transition from a rolled-up state as depicted in FIG. **5**A to a flattened state as depicted in FIG. **5**B.

[0044] FIG. **5**B shows how flexible display assembly **502** can include a flexible battery **508** that can be distributed on opposing sides of flexible display **510**. In some embodiments, flexible battery **508** can be distributed along all four sides of flexible display **510**. Flexible battery **508** can take the form of any of the aforementioned flexible battery configurations to accommodate transition of flexible display assembly **502** between the rolled and flattened configurations. For example, flexible battery **400** could be oriented within flexible display assembly **502** so that only its thickness **416** adds to the overall thickness of flexible display assembly **502**. Flexible battery **400** can have the advantage of being able to bend in multiple axes, which can all flexible display assembly **502** to bend about more than just the axis flexible display assembly **502** is configured to roll. In some embodiments, the thickness of flexible battery **400** may not add to the overall thickness of flexible display assembly **502** at all, as flexible display **510** may have a similar or even greater thickness than flexible battery **400**. It should be appreciated that BMU **504** and main logic board **506** may not be shown to scale. For example, BMU **504** and main logic board **506** could both be packaged within a housing **512** into which flexible display **502** is configured to retract by a retraction mechanism that results in flexible display being wound around a cylindrical member within housing **512**. In this way, flexible display **510** and flexible battery **508** can make electronic device substantially more portable and easy to carry when not in active use.

[0045] The various aspects, embodiments, implementations or features of the described embodiments can be used separately or in any combination. Various aspects of the described embodiments can be implemented by software, hardware or a combination of hardware and software. The described embodiments can also be embodied as computer readable code on a computer readable medium for controlling operation of the smart case and/or communication between the smart case and an electronic device disposed therein. The computer readable medium is any data storage device that can store data, which can thereafter be read by a computer system. Examples of the computer readable

medium include read-only memory, random-access memory, CD-ROMs, HDDs, DVDs, magnetic tape, and optical data storage devices. The computer readable medium can also be distributed over network-coupled computer systems so that the computer readable code is stored and executed in a distributed fashion.

[0046] The foregoing description, for purposes of explanation, used specific nomenclature to provide a thorough understanding of the described embodiments. However, it will be apparent to one skilled in the art that the specific details are not required in order to practice the described embodiments. Thus, the foregoing descriptions of specific embodiments are presented for purposes of illustration and description. They are not intended to be exhaustive or to limit the described embodiments to the precise forms disclosed. It will be apparent to one of ordinary skill in the art that many modifications and variations are possible in view of the above teachings.

What is claimed is:

1. A battery, comprising:

flexible battery cells arranged in a stack and having a serpentine geometry that accommodates bending of the flexible battery cells about three orthogonal axes, each one of the flexible battery cells comprising:

an anode layer;

a cathode layer; and

a separator joining the anode layer to the cathode layer.

2. The battery as recited in claim **1**, wherein the serpentine geometry is defined by notches staggered along a length of the battery.

3. The battery as recited in claim **2**, wherein the notches extend across more than half a width of the flexible battery cells.

4. The battery as recited in claim **1**, wherein a height of the flexible battery cells is more than ten times greater than a thickness of the flexible battery cells.

5. The battery as recited in claim **4**, wherein a thickness of each one of the flexible battery cells is 100 to 200 microns.

6. The battery as recited in claim **1**, wherein the flexible battery cells are prismatic battery cells.

7. An electronic device, comprising:

a flexible housing member; and

a flexible battery disposed within the flexible housing member, the flexible battery comprising:

flexible battery cells arranged in a stack and defining stress-relieving gaps that accommodate bending of the flexible battery cells about multiple axes of rotation, each one of the flexible battery cells comprising an anode layer, a cathode layer and a separator disposed between the anode and cathode layers.

8. The electronic device as recited in claim **7**, wherein the flexible housing member comprises a flexible display assembly.

9. The electronic device as recited in claim **8**, wherein the flexible battery is positioned along a periphery of the flexible display assembly and the flexible display assembly is configured to transition from a flattened state to a rolled-up state.

10. The electronic device as recited in claim **8**, wherein the flexible battery is a first flexible battery positioned on a first side of the flexible display assembly and the electronic device further comprises a second flexible battery positioned on a second side of the flexible display assembly, opposite the first side of the flexible display assembly.

11. The electronic device as recited in claim **7**, wherein a height of the flexible battery cells arranged in a stack is more than ten times greater than a thickness of the flexible battery cells.

12. The electronic device as recited in claim **7**, wherein the stress-relieving gaps are formed using a die cutting operation.

13. An electronic device, comprising:

a device housing; and

a display assembly, comprising:

a flexible display; and

flexible battery cells arranged in a stack and having a serpentine geometry that accommodates bending of the flexible battery cells about three orthogonal axes, each one of the flexible battery cells comprising:

an anode layer;

a cathode layer; and

a separator joining the anode layer to the cathode layer.

14. The electronic device as recited in claim **13**, wherein the serpentine geometry is defined by notches staggered along opposing sides of the flexible battery cells.

15. The electronic device as recited in claim **14**, wherein the notches extend across more than half a width of the flexible battery cells.

16. The electronic device as recited in claim **13**, wherein the display assembly is configured to transition between a rolled-up state in which the housing surrounds the display assembly to a flattened state in which at least a portion of the display assembly protrudes out of the device housing.

17. The electronic device as recited in claim **13**, wherein the flexible battery cells are prismatic battery cells.

18. The electronic device as recited in claim **13**, wherein the flexible battery cells are first flexible battery cells positioned on a first side of the flexible display and the electronic device further comprises second flexible battery cells positioned on a second side of the flexible display, opposite the first side.

19. The electronic device as recited in claim **18**, further comprising a battery management unit, wherein the first and second flexible battery cells and are separately coupled to the battery management unit.

20. The electronic device as recited in claim **13**, wherein a thickness of each of the flexible battery cells is between 100 and 200 microns.

* * * * *