US 20140139422A1

(19) United States

(12) Patent Application Publication

Mistry et al.

(10) Pub. No.: US 2014/0139422 A1

(43) Pub. Date: May 22, 2014

(54) **USER GESTURE INPUT TO WEARABLE ELECTRONIC DEVICE INVOLVING OUTWARD-FACING SENSOR OF DEVICE**

(71) Applicant: **Samsung Electronics Company, Ltd.**, Suwon City (KR)

(72) Inventors: **Pranav Mistry**, Cupertino, CA (US); **Sajid Sadi**, San Jose, CA (US); **Lining Yao**, Cambridge, MA (US); **John Snavely**, Seattle, WA (US)

(73) Assignee: **Samsung Electronics Company, Ltd.**, Suwon City (KR)

(21) Appl. No.: **14/015,909**

(22) Filed: **Aug. 30, 2013**

Related U.S. Application Data

(60) Provisional application No. 61/728,765, filed on Nov. 20, 2012, provisional application No. 61/728,770, filed on Nov. 20, 2012, provisional application No. 61/773,803, filed on Mar. 6, 2013, provisional application No. 61/728,773, filed on Nov. 20, 2012, provisional application No. 61/773,813, filed on Mar. 7, 2013, provisional application No. 61/773,815, filed on Mar. 7, 2013, provisional application No. 61/773,817, filed on Mar. 7, 2013, provisional application No. 61/775,688, filed on Mar. 11, 2013, provisional application No. 61/775,687, filed on Mar. 11, 2013, provisional application No. 61/775,686, filed on Mar. 11, 2013.

Publication Classification

(51) **Int. Cl.**
G06F 3/01 (2006.01)

(52) **U.S. Cl.**
CPC *G06F 3/017* (2013.01)
USPC **345/156**

(57) **ABSTRACT**

In one embodiment, a wearable apparatus includes a sensor, a processor coupled to the sensor, and a memory coupled to the processor that includes instructions executable by the processor. When executing the instructions, the processor detects by the sensor movement of at least a portion of an arm of a user; detects, based at least in part on the movement, a gesture made by the user; and processes the gesture as input to the wearable apparatus.

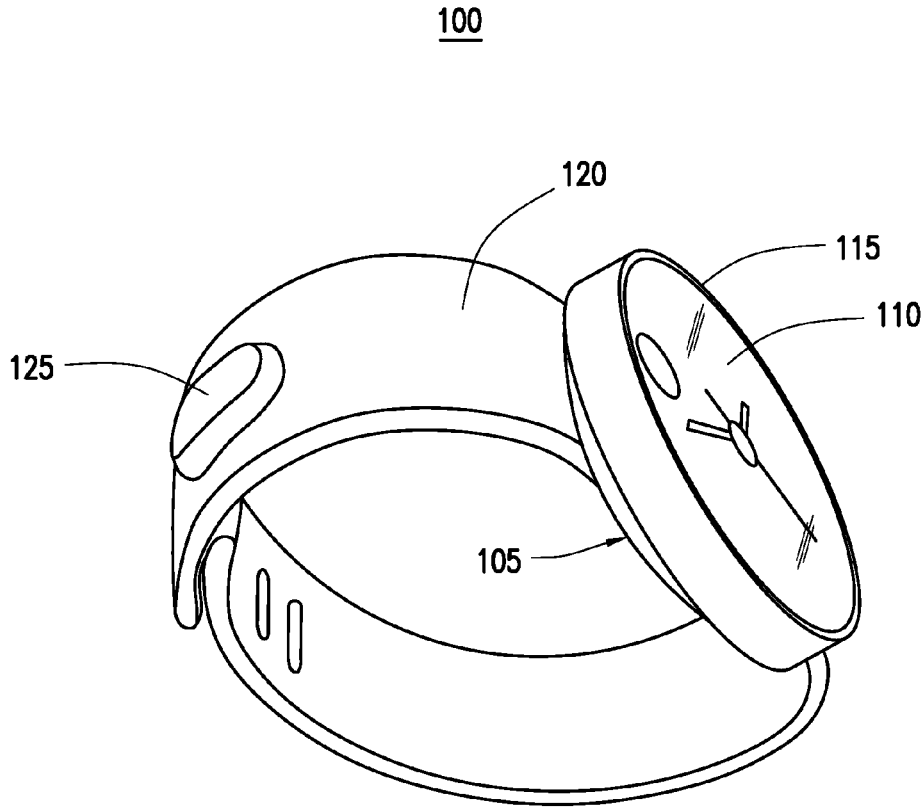

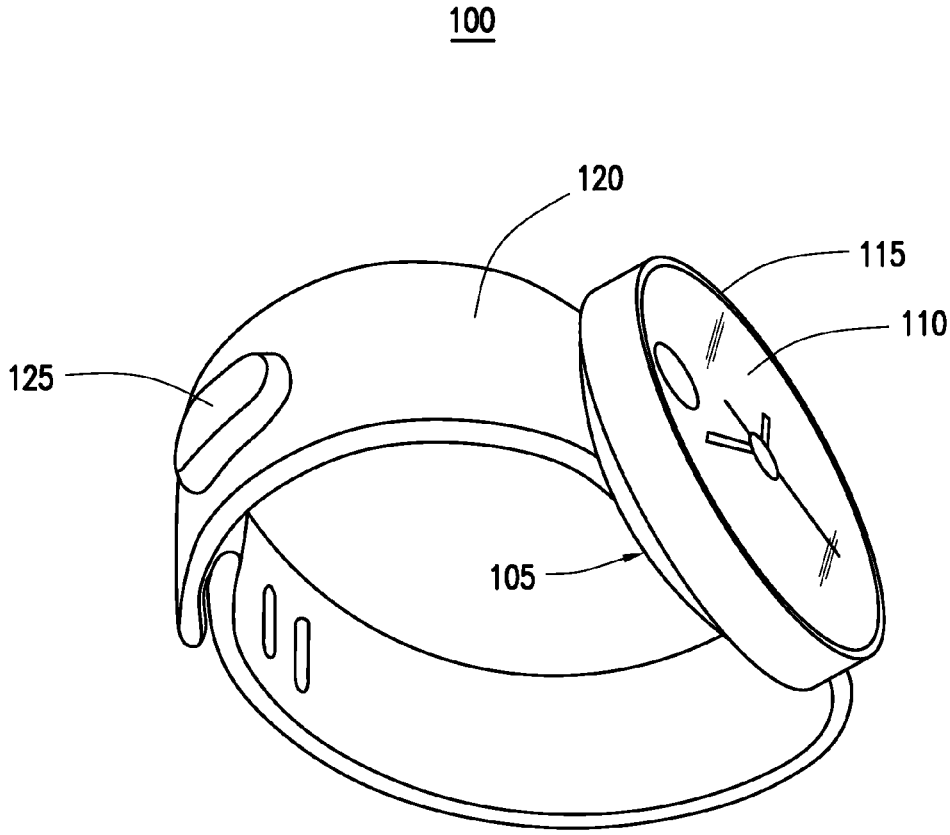

FIG. 1

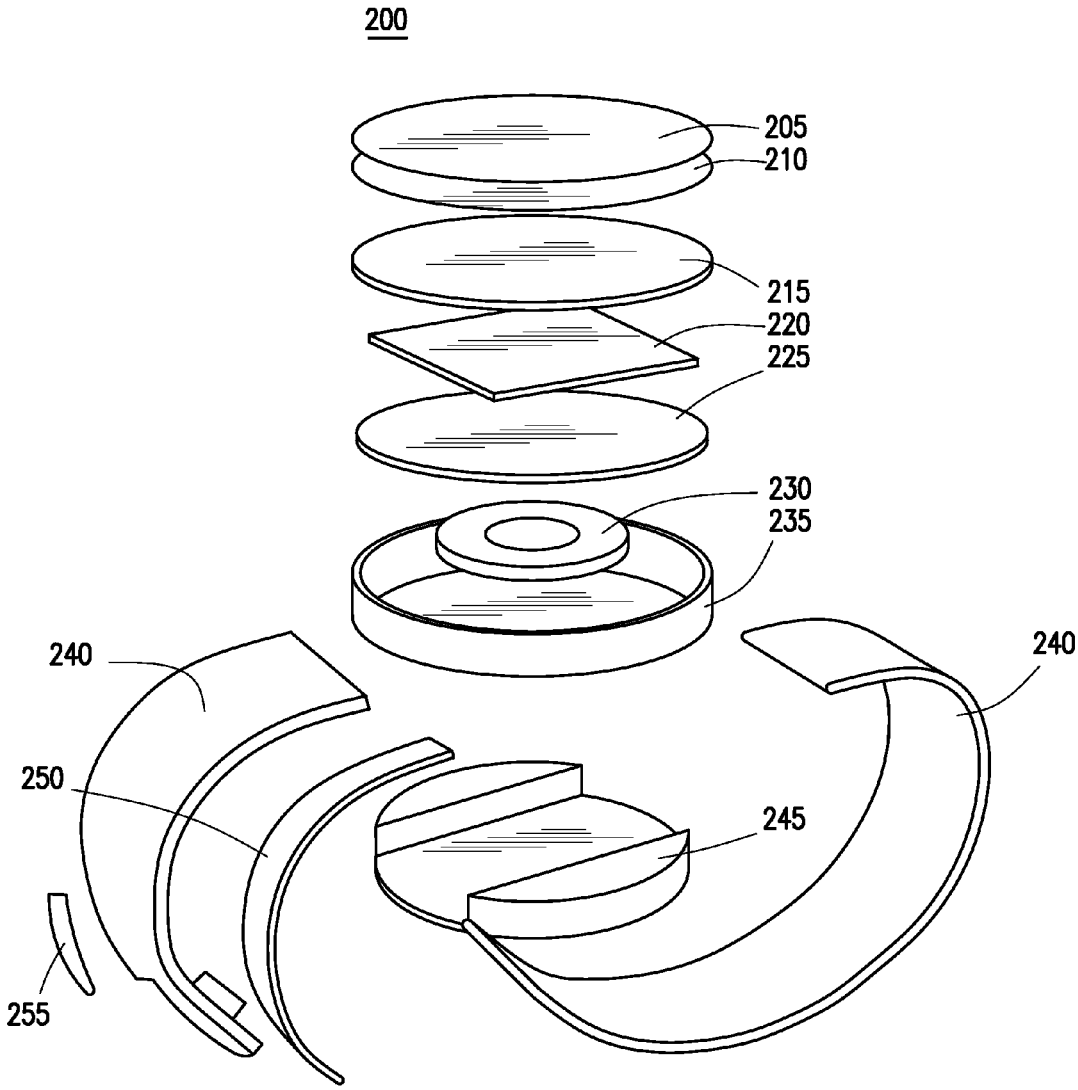

FIG. 2

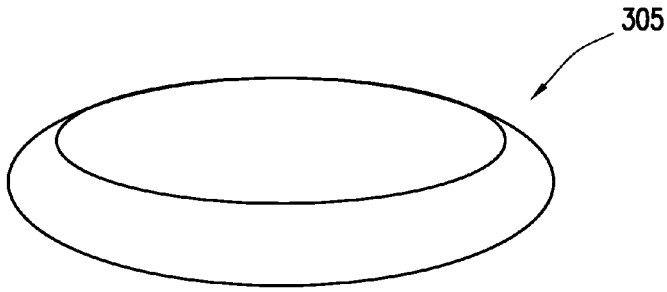

FIG. 3A

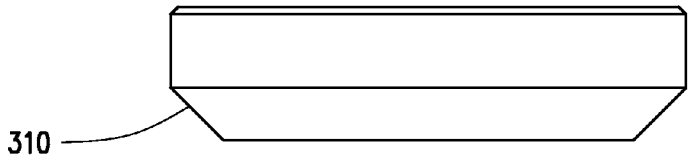

FIG. 3B

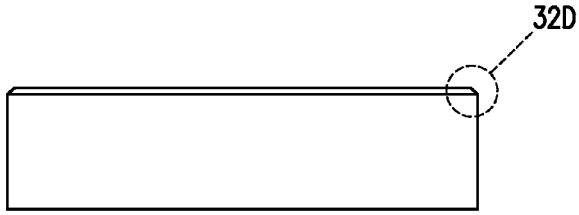

FIG. 3C

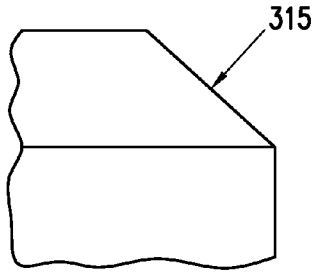

FIG. 3D

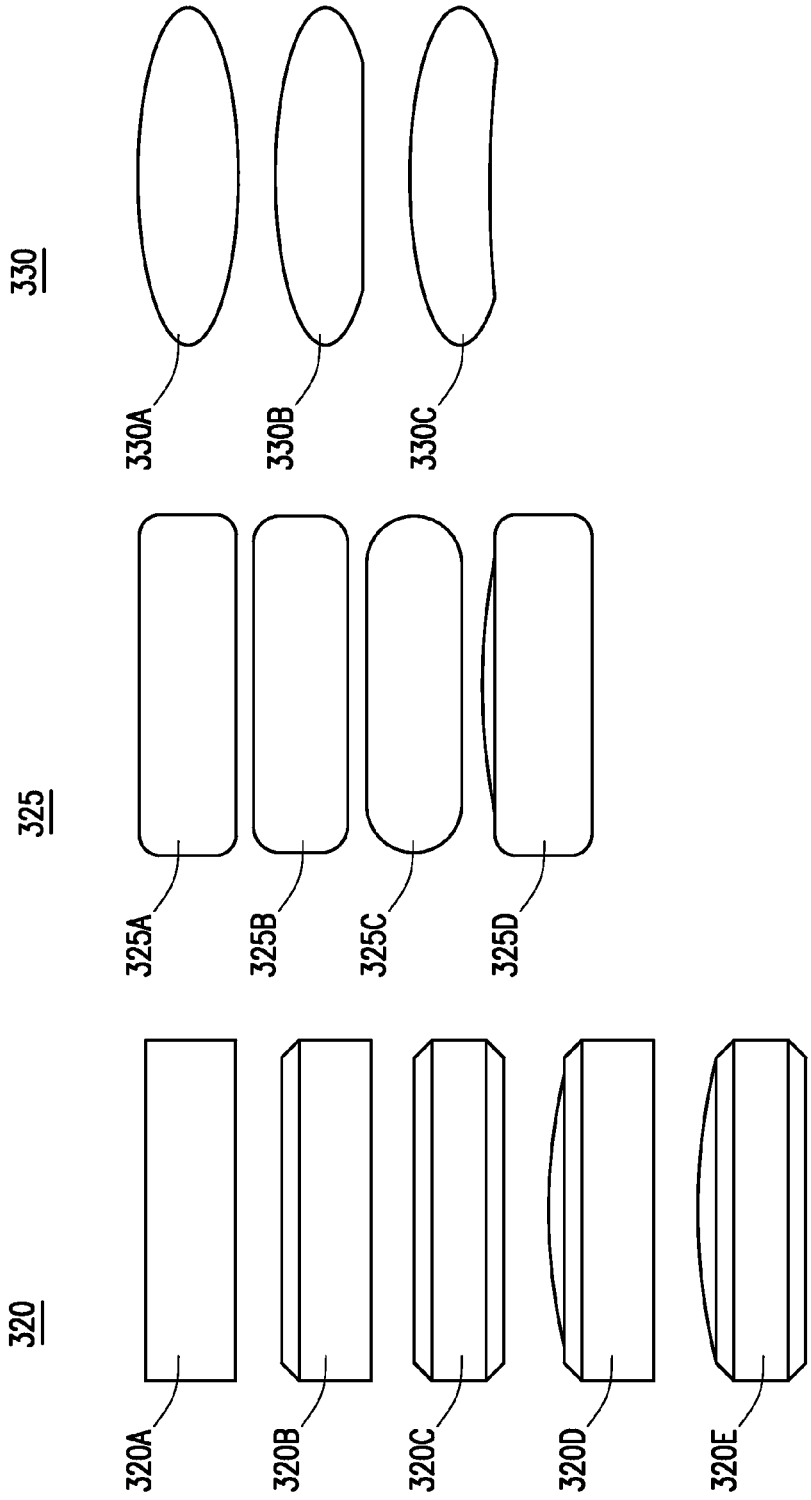
330
330A
330B
330C
325
325A
325B
325C
325D
320
320A
320B
320C
320D
320E

FIG. 3E

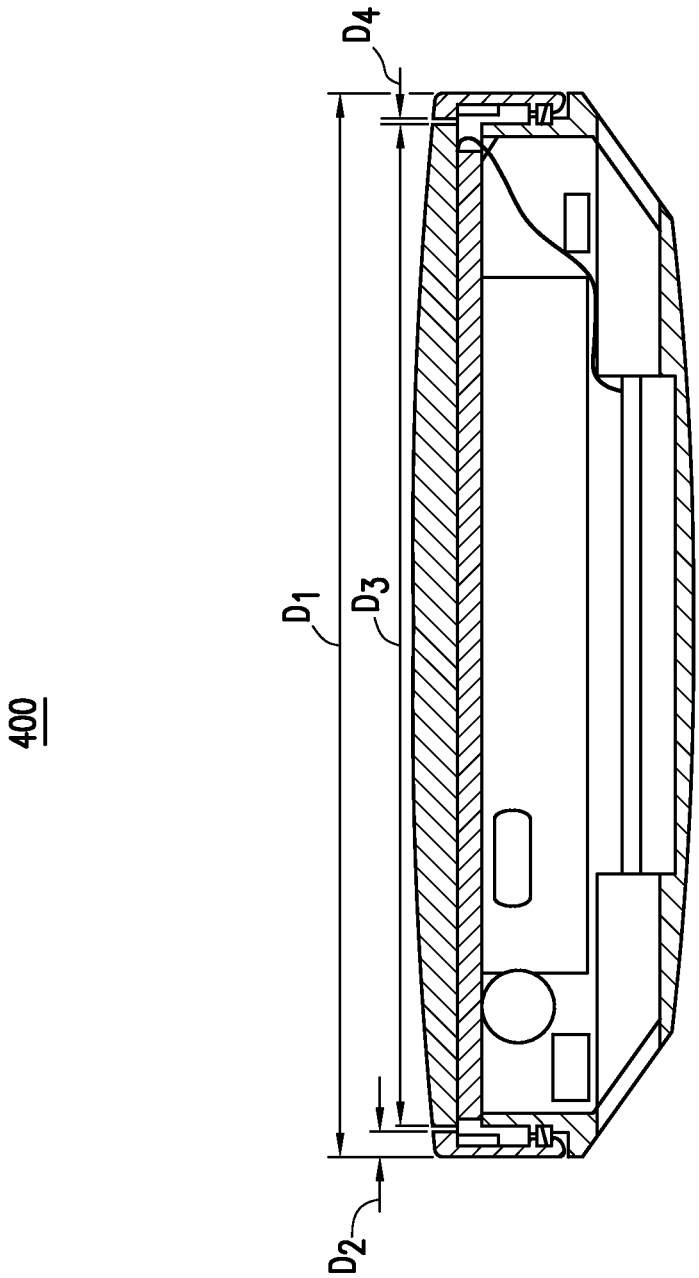

FIG. 4A

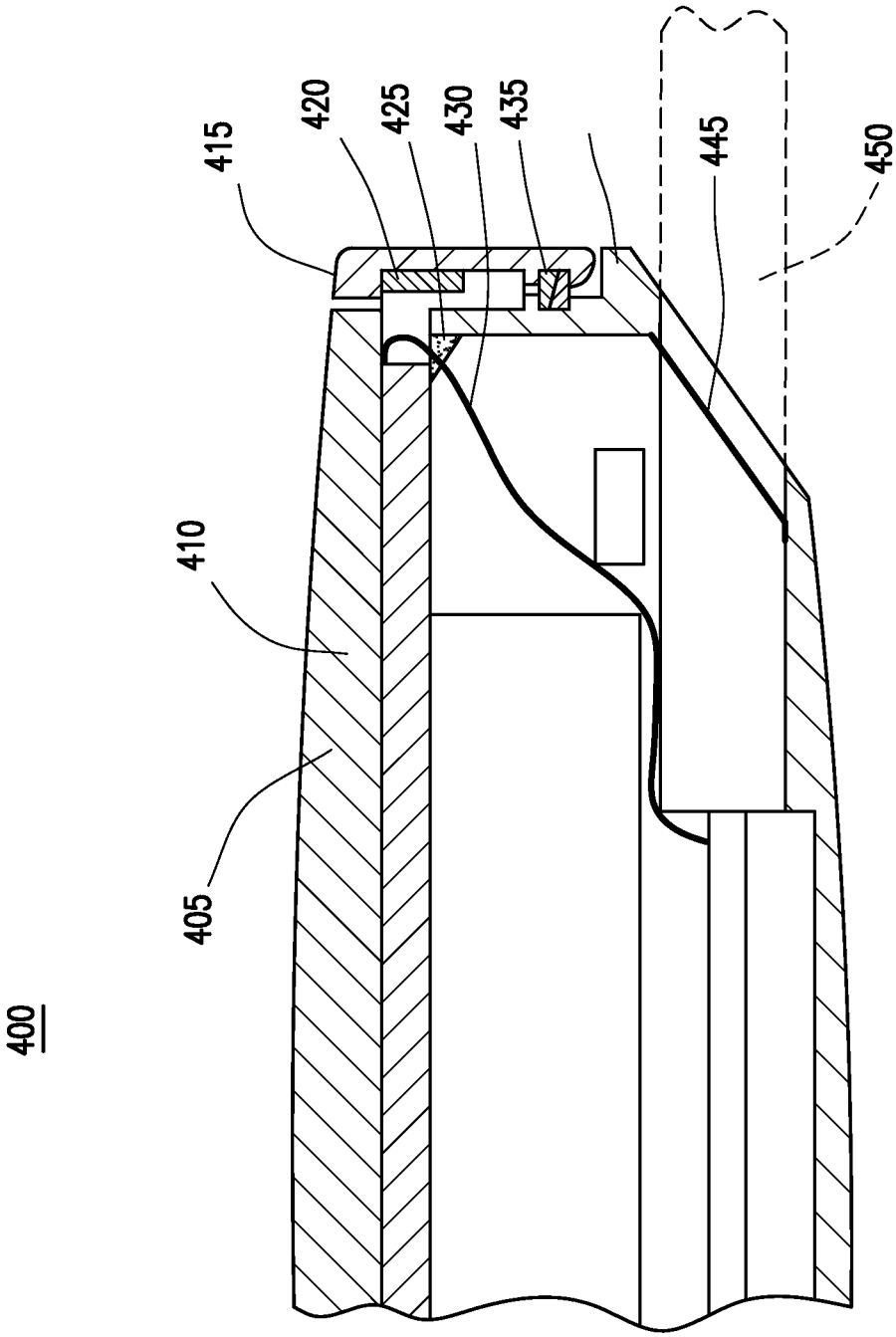

FIG. 4B

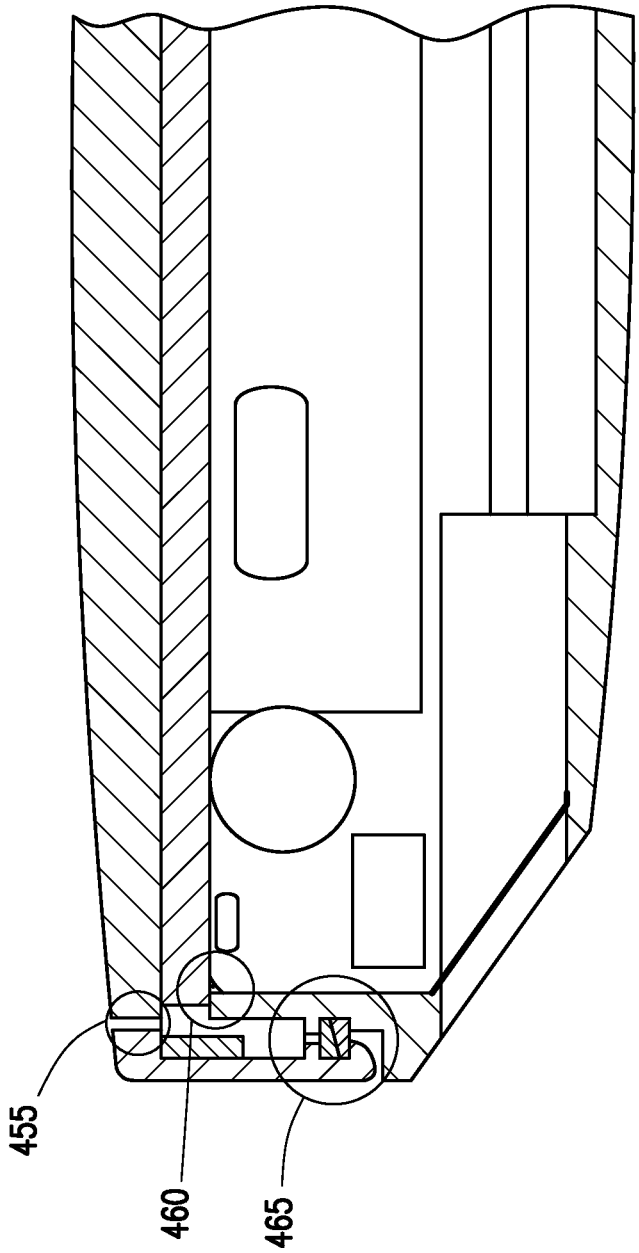

FIG. 4C

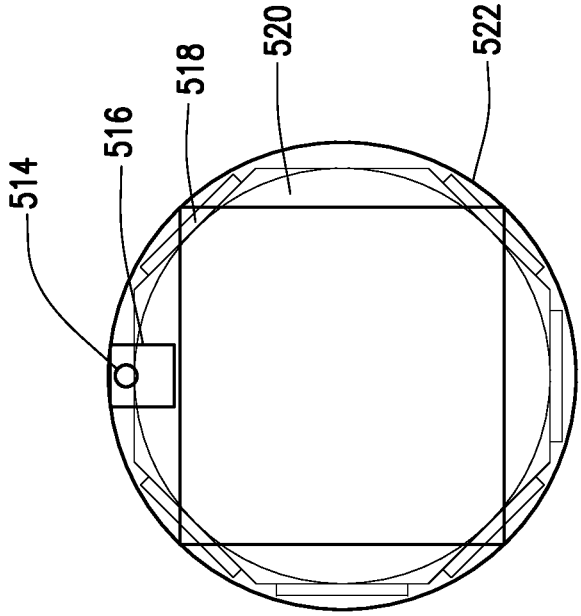

FIG. 5B

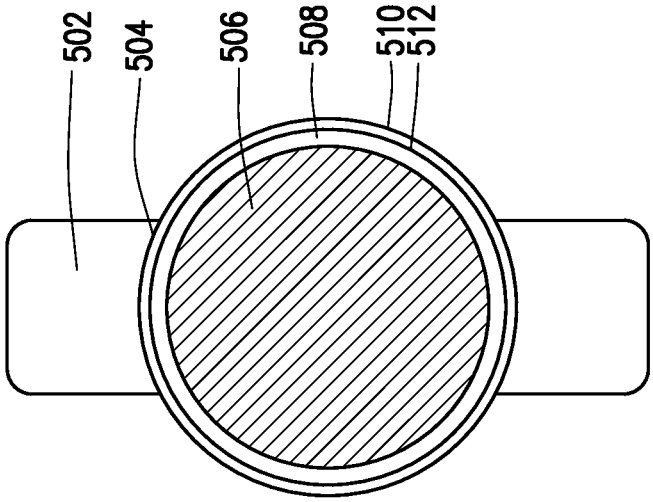

FIG. 5A

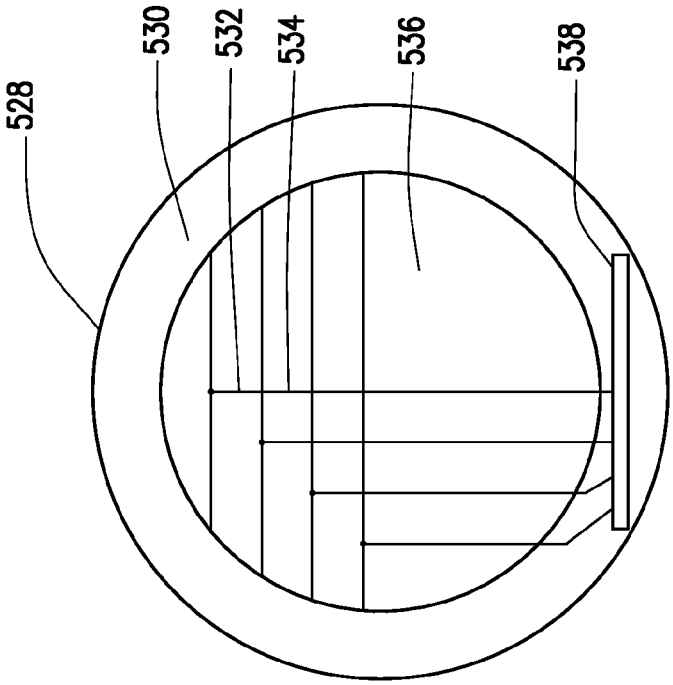

FIG. 5D

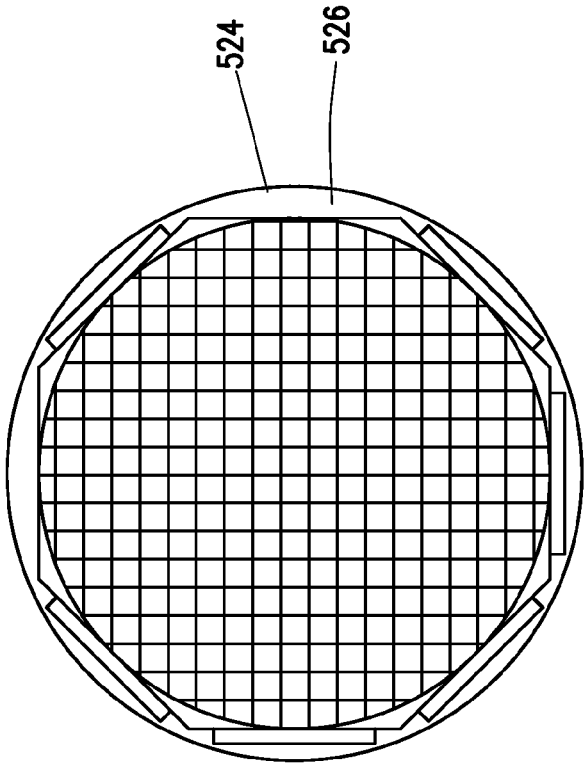

FIG. 5C

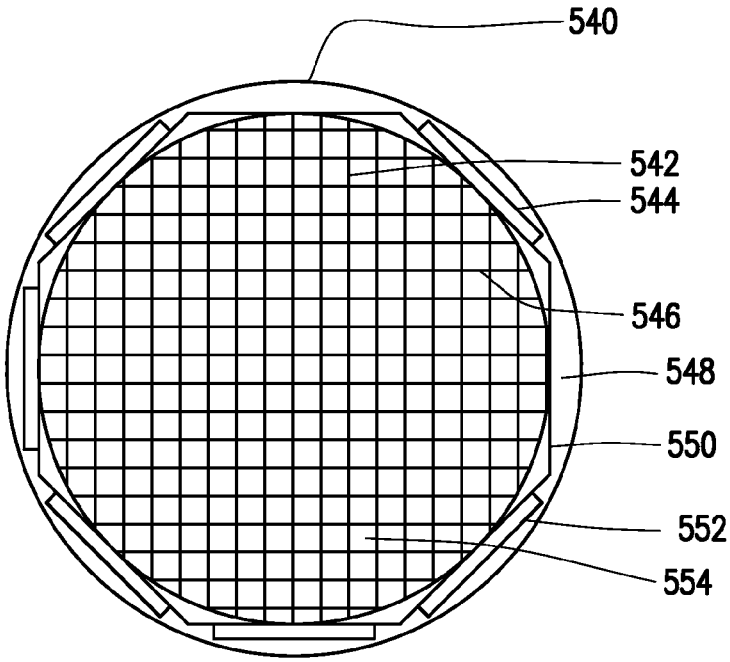

FIG. 5E

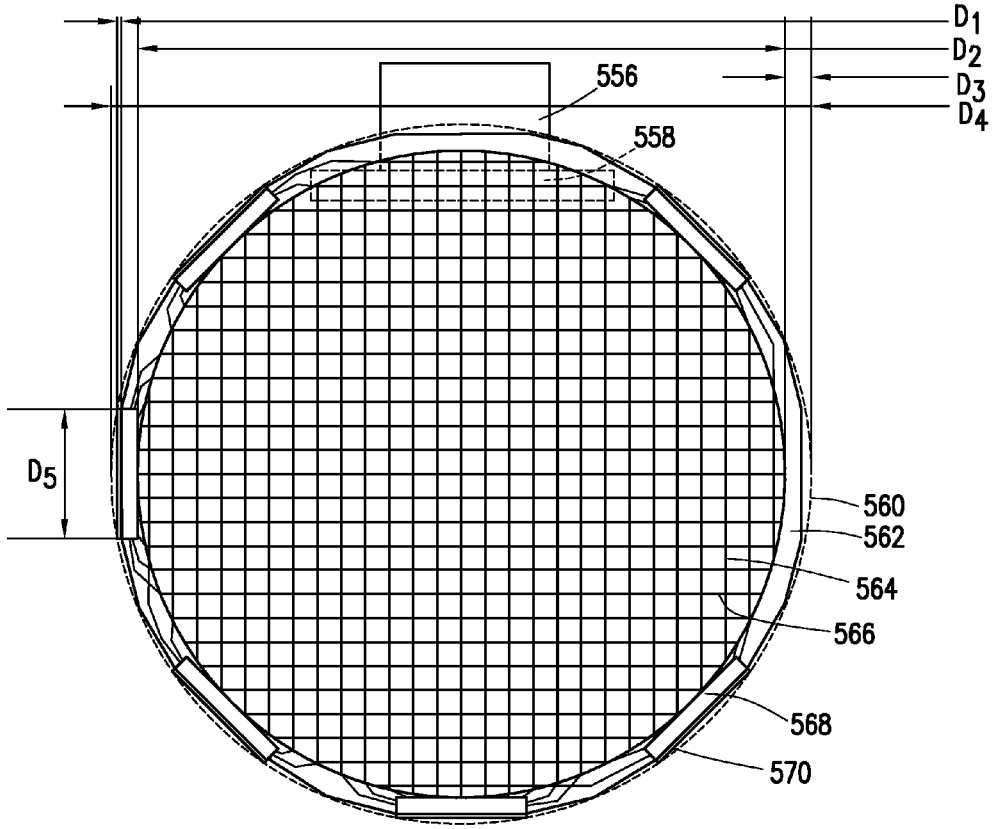

FIG. 5F

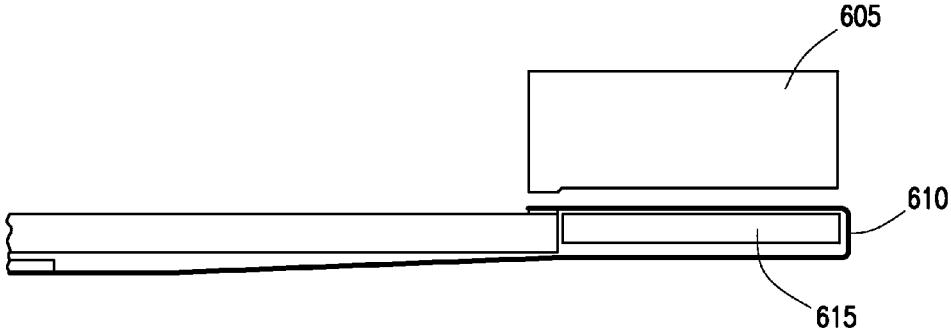

FIG. 6A

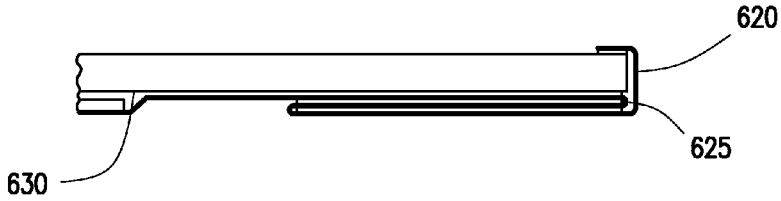

FIG. 6B

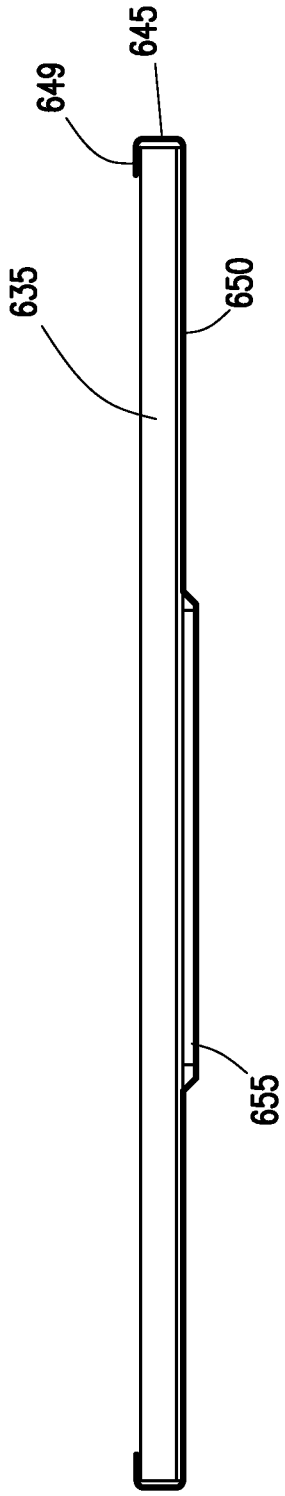

FIG. 6C

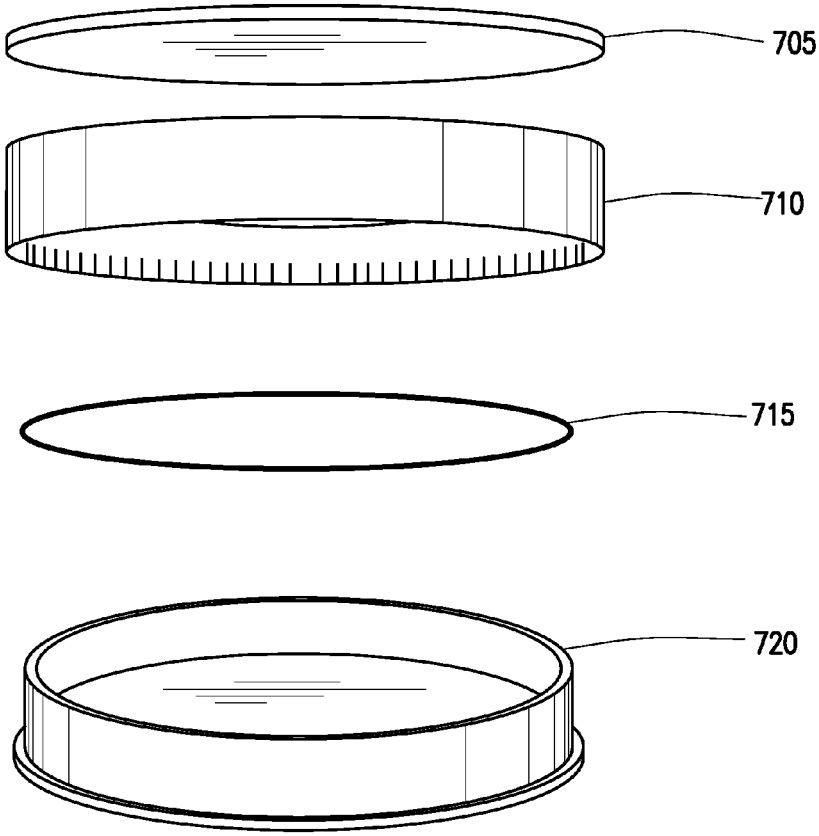

FIG. 7A

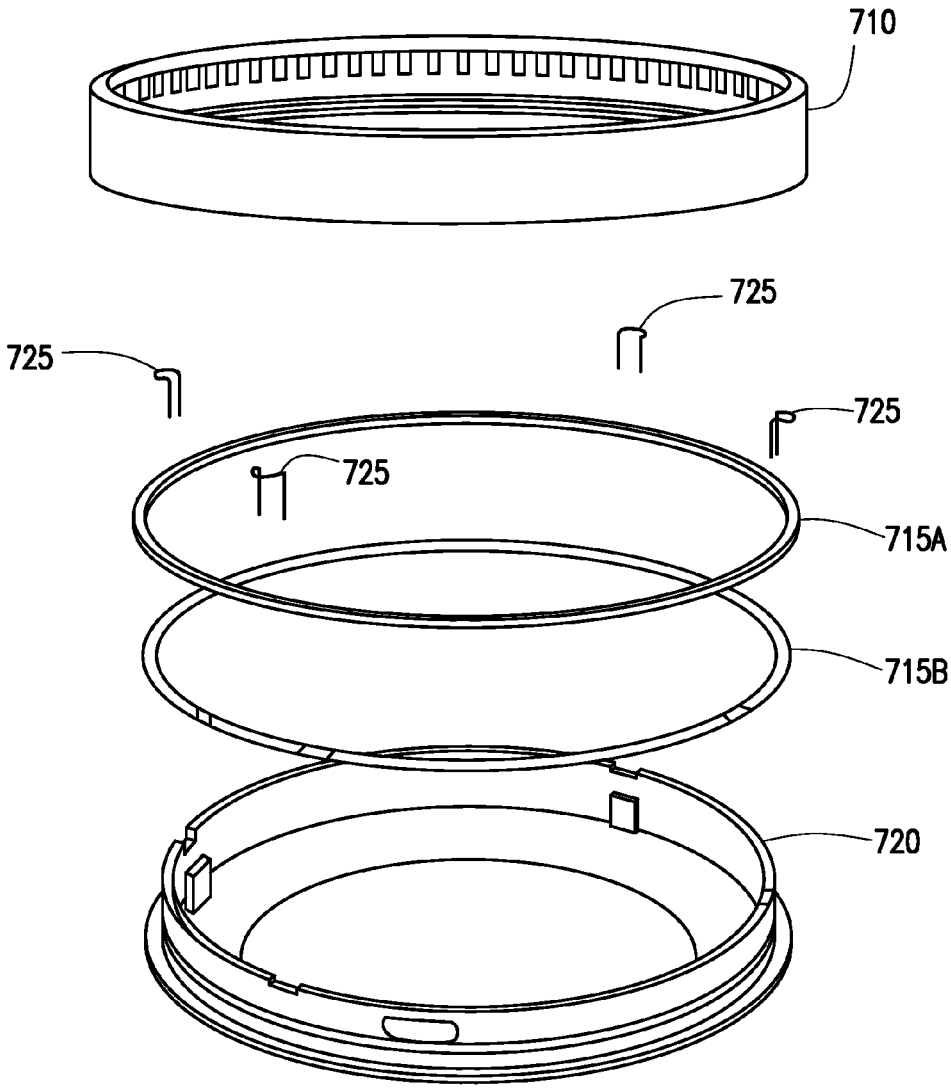

FIG. 7B

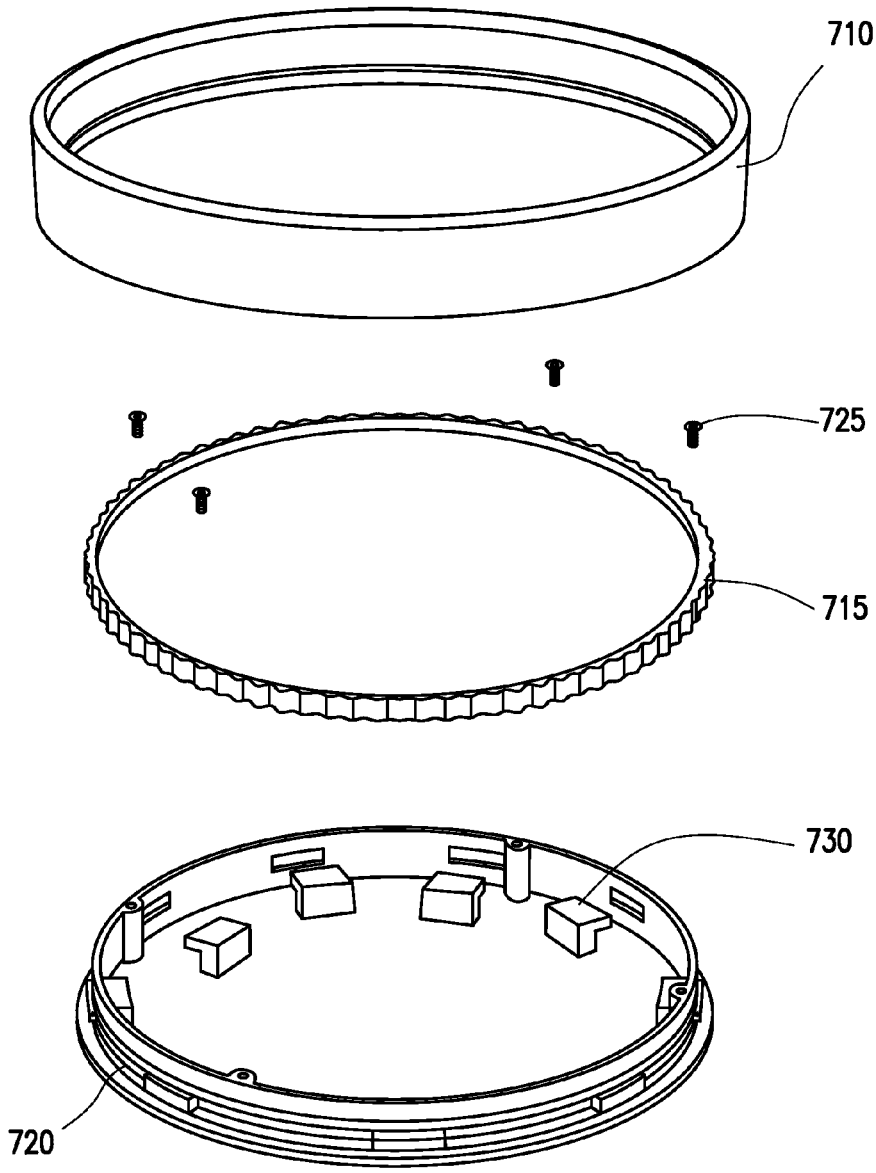

FIG. 7C

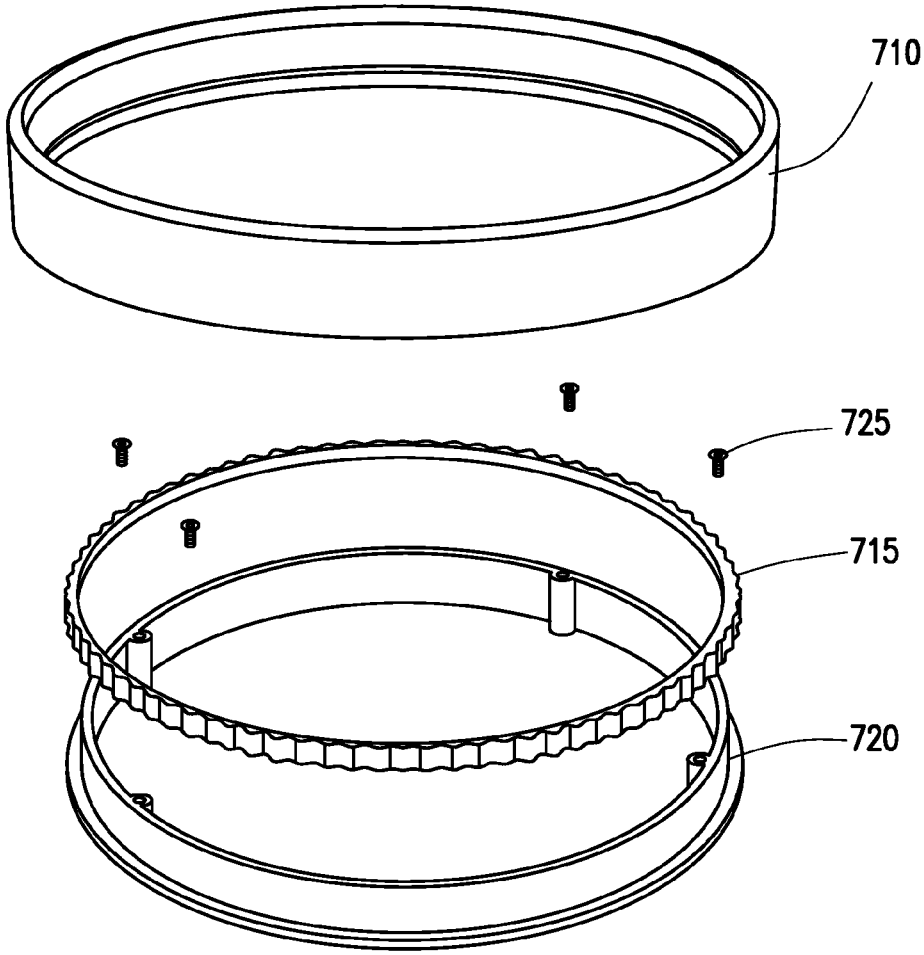

FIG. 7D

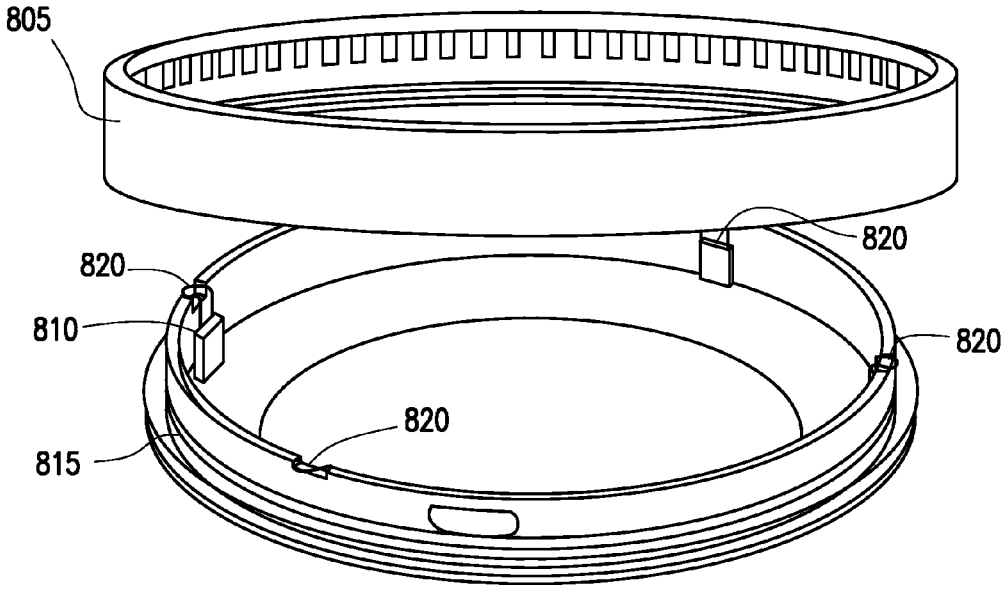

FIG. 8A

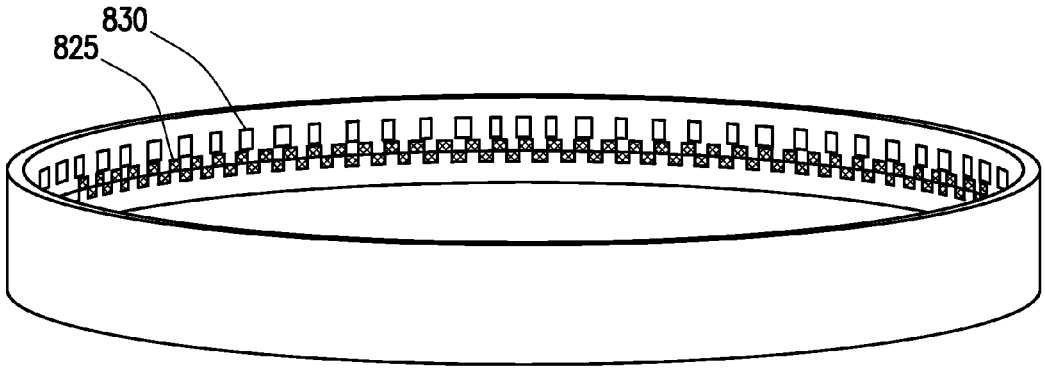

FIG. 8B

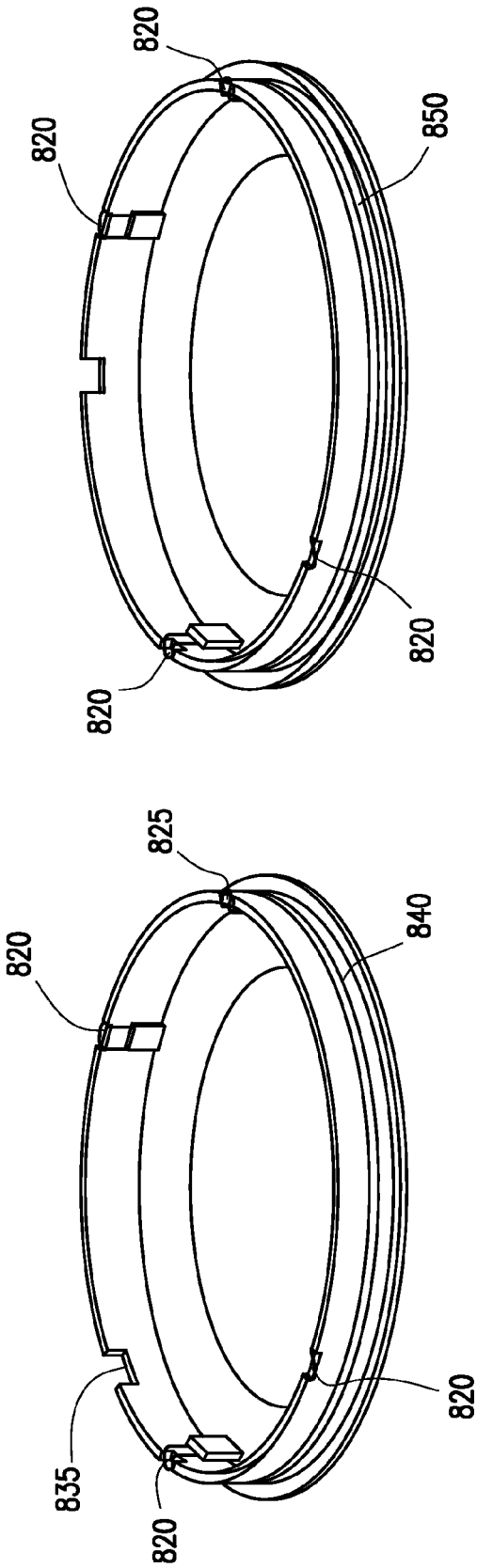

FIG. 8C

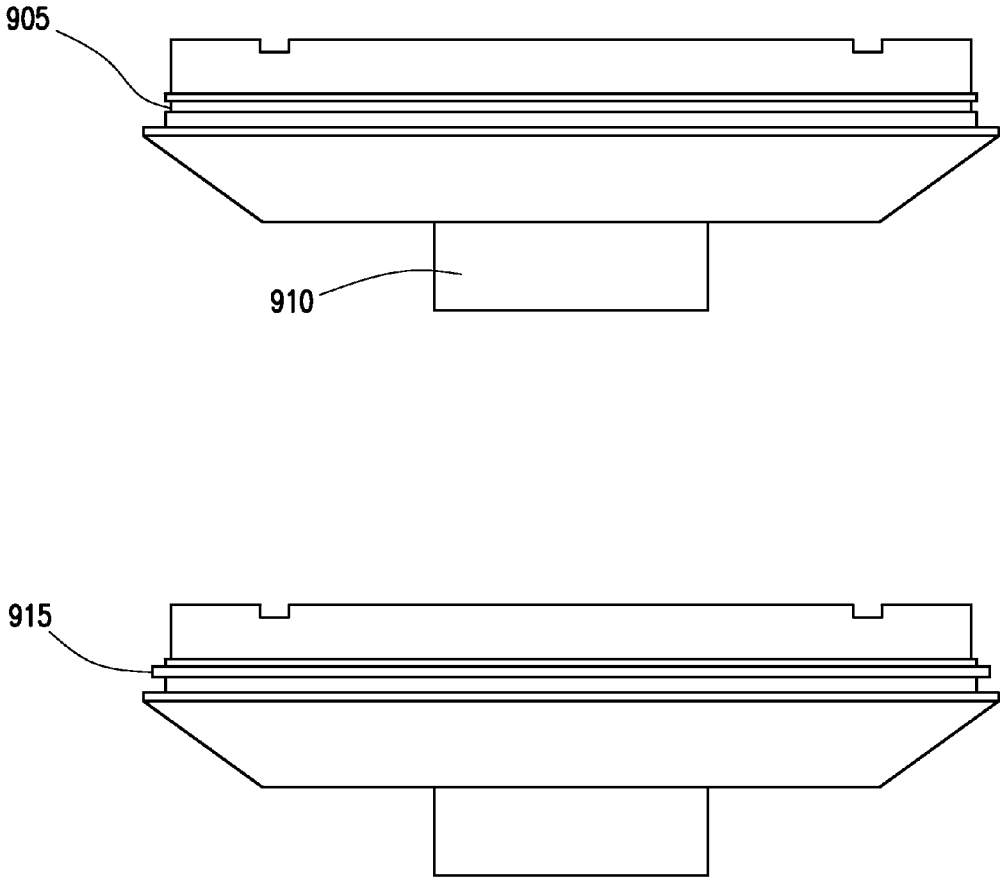

FIG. 9

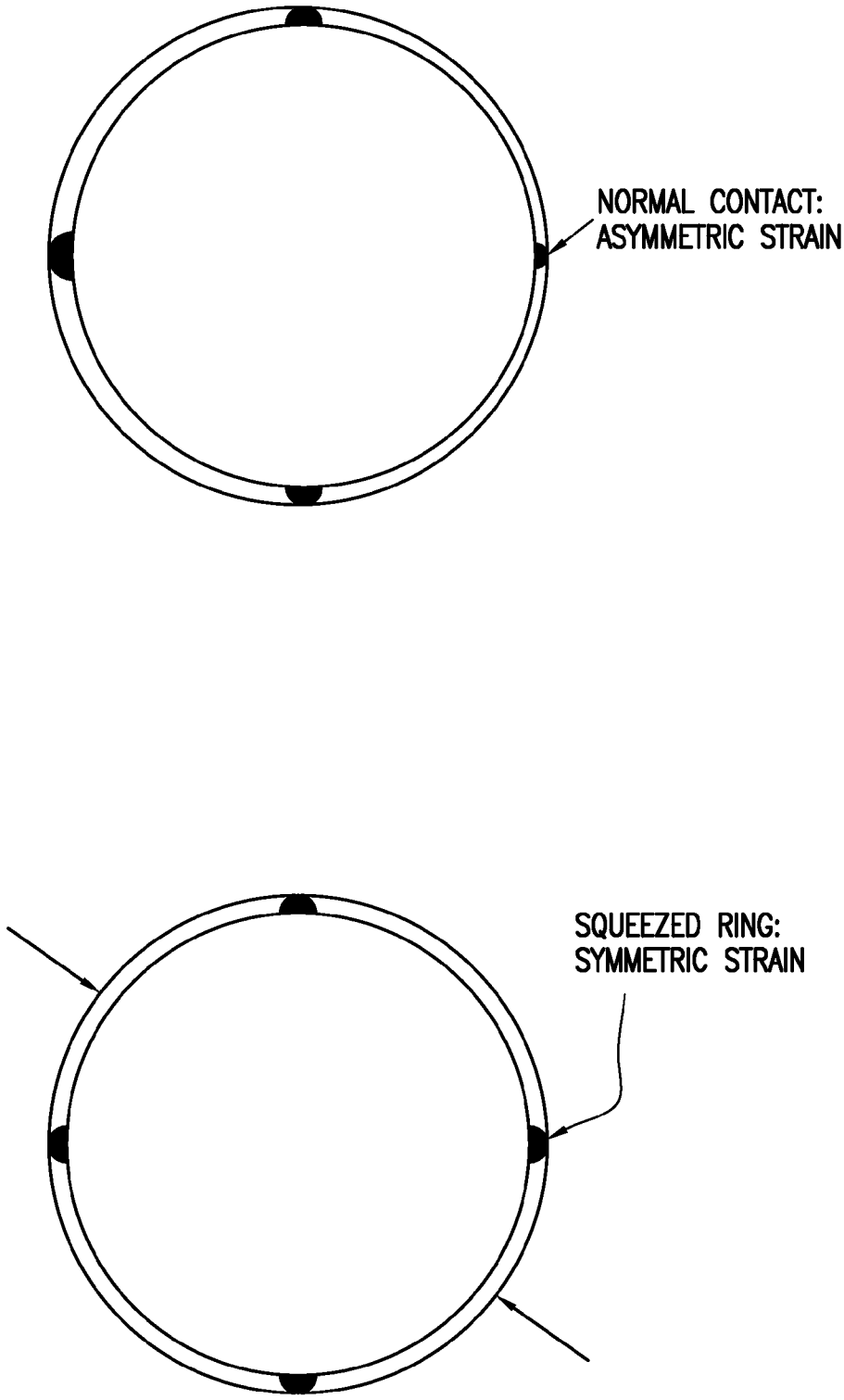
NORMAL CONTACT:
ASYMMETRIC STRAIN
SQUEEZED RING:
SYMMETRIC STRAIN

FIG. 10

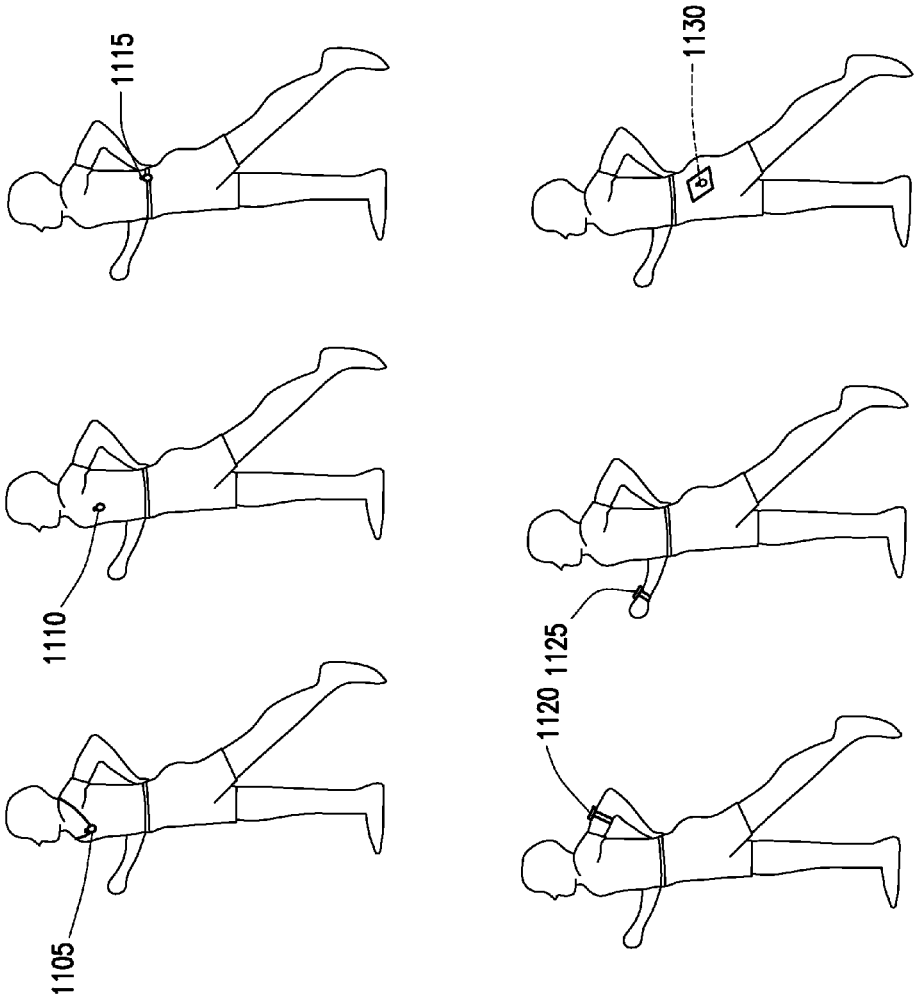

FIG. 11

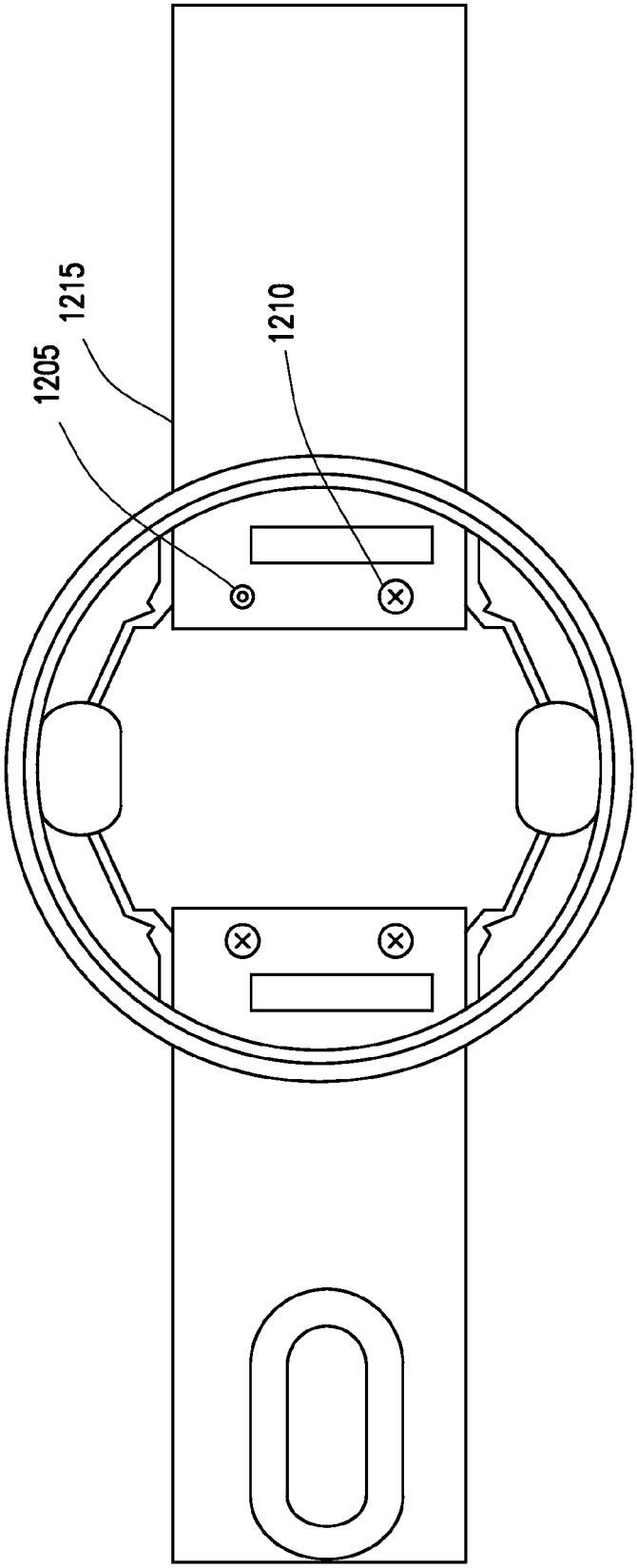

FIG. 12A

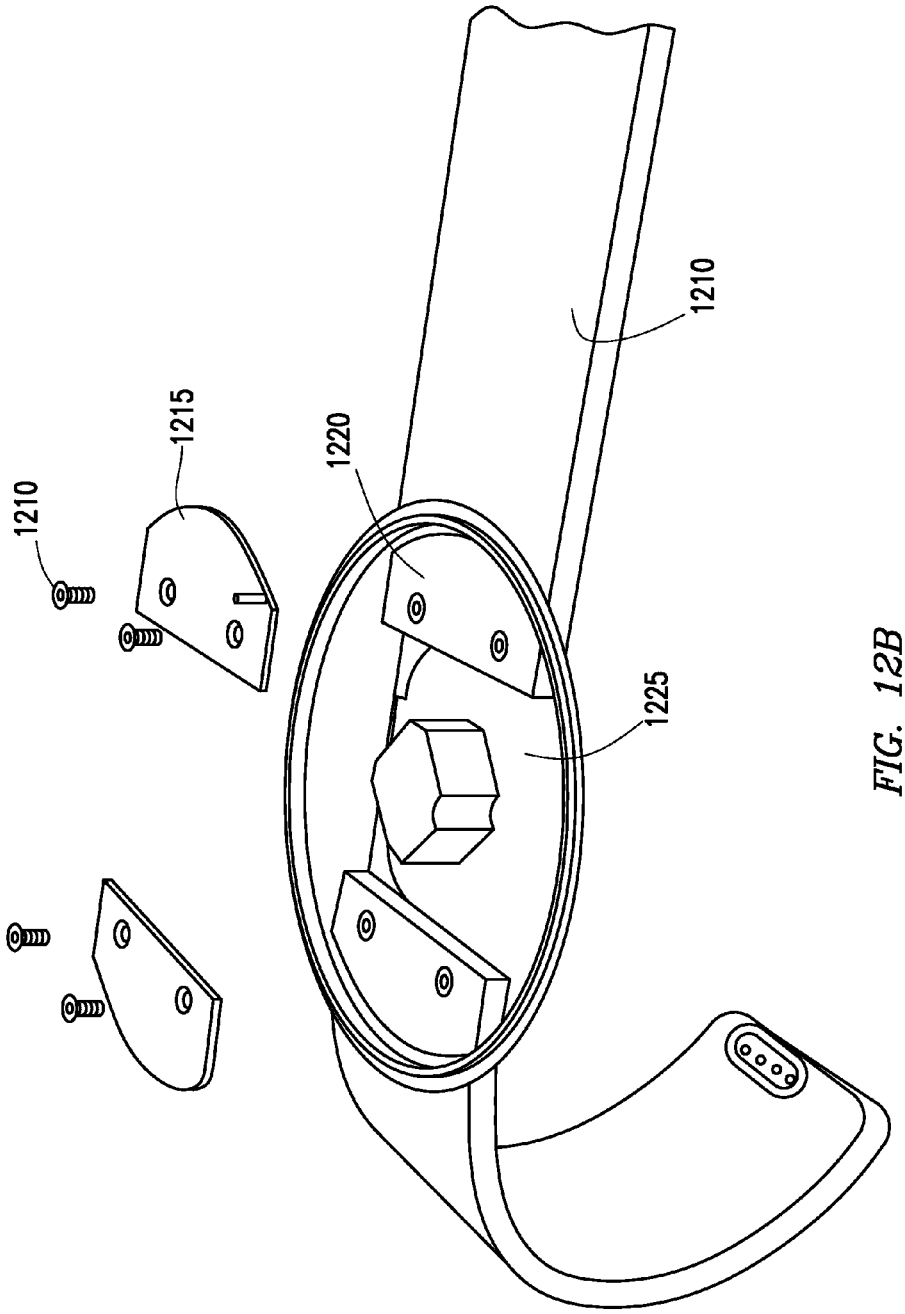

FIG. 12B

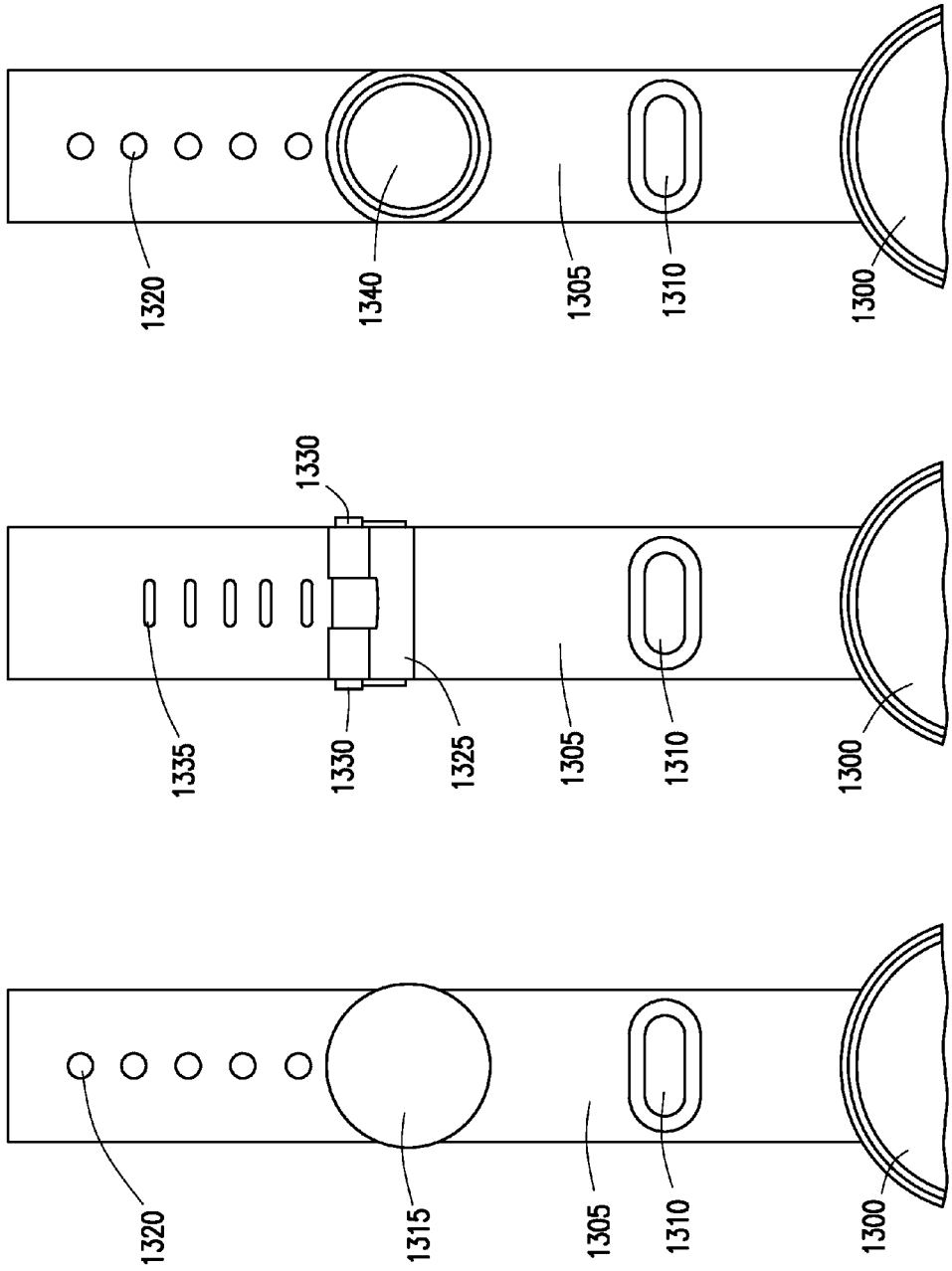
1320
1340
1305
1310
1300
1330
1335
1330
1325
1305
1310
1300
1320
1315
1305
1310
1300

FIG. 13A

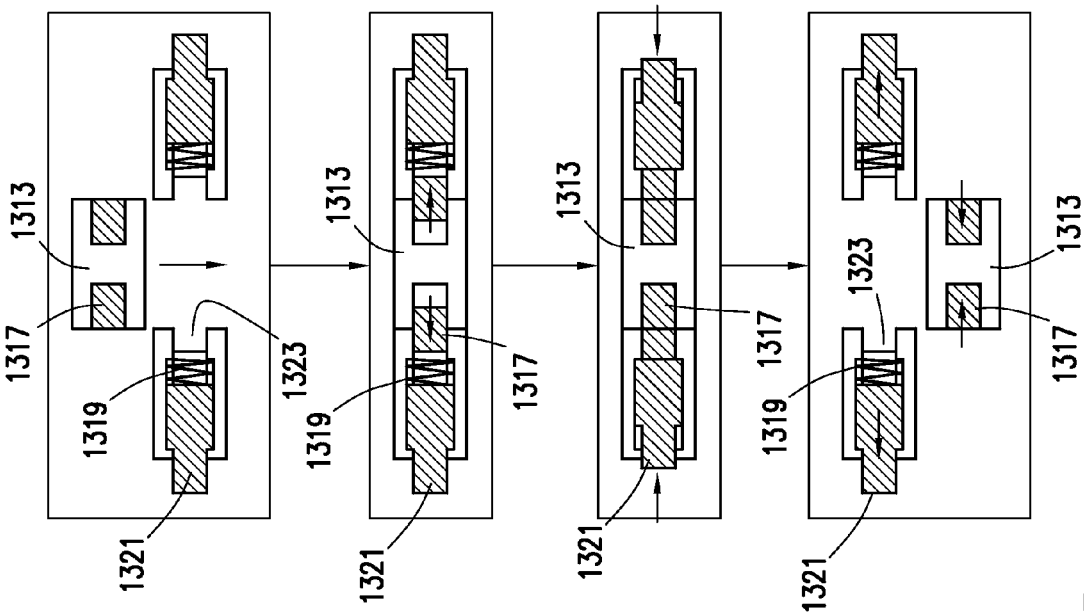

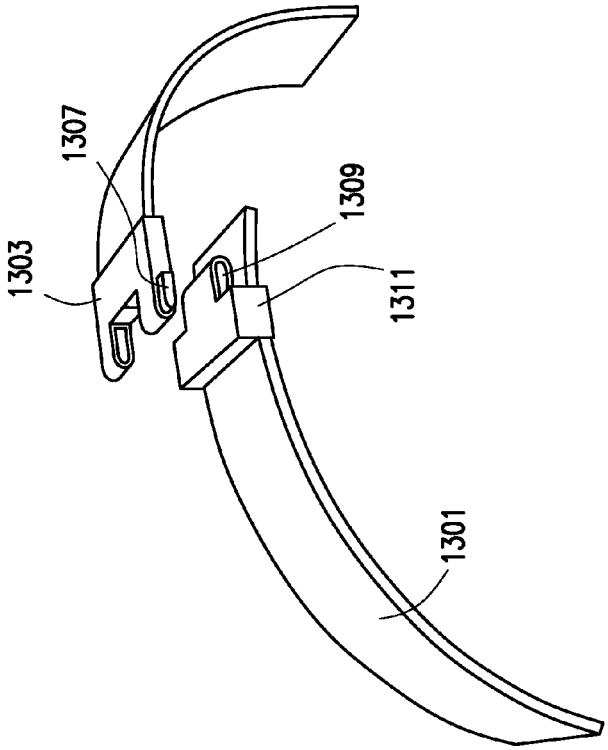

FIG. 13B

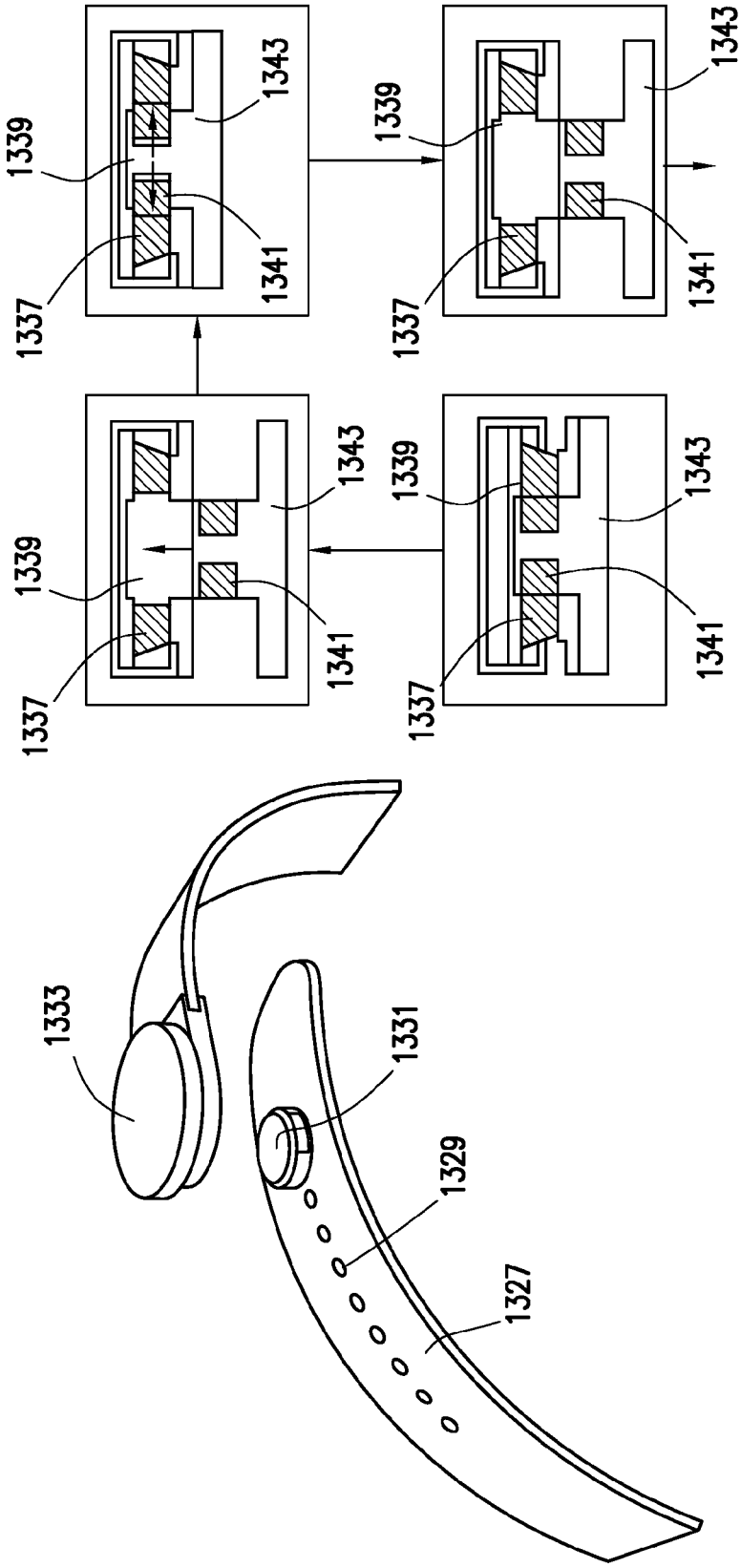
1339
1343
1337
1341
1339
1343
1337
1341
1339
1343
1337
1341
1339
1343
1337
1341
1333
1331
1329
1327

FIG. 13C

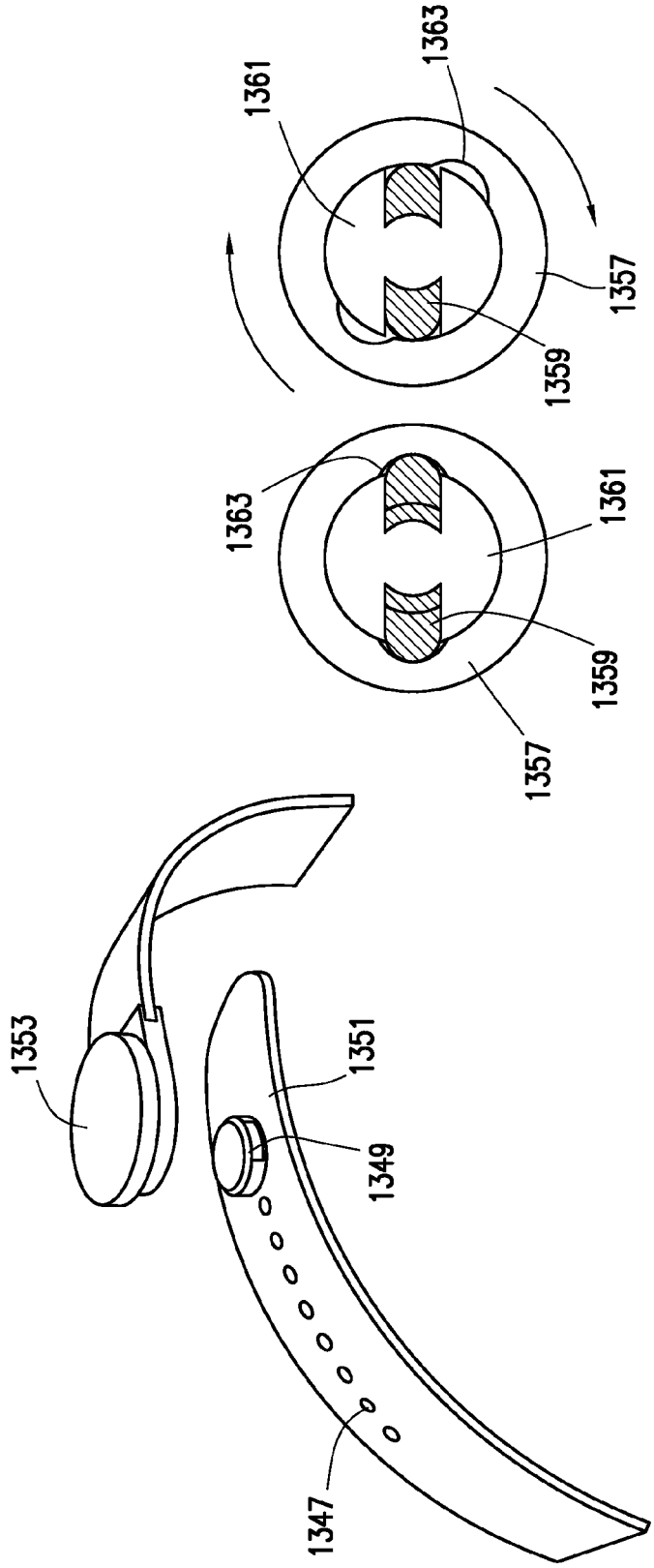

FIG. 13D

FIG. 13E

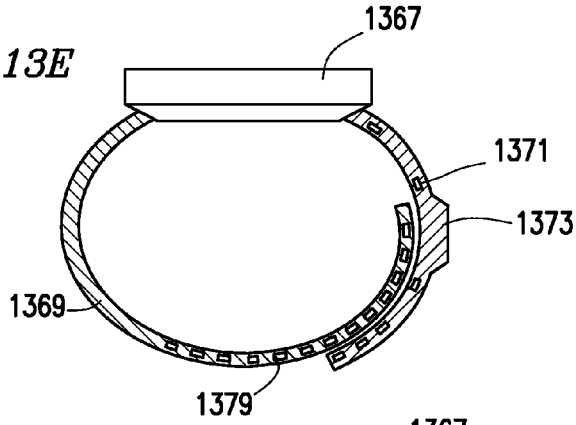

FIG. 13F

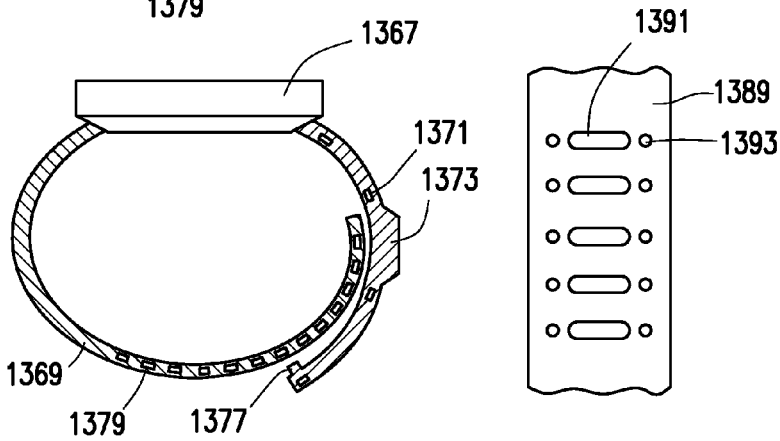

FIG. 13G

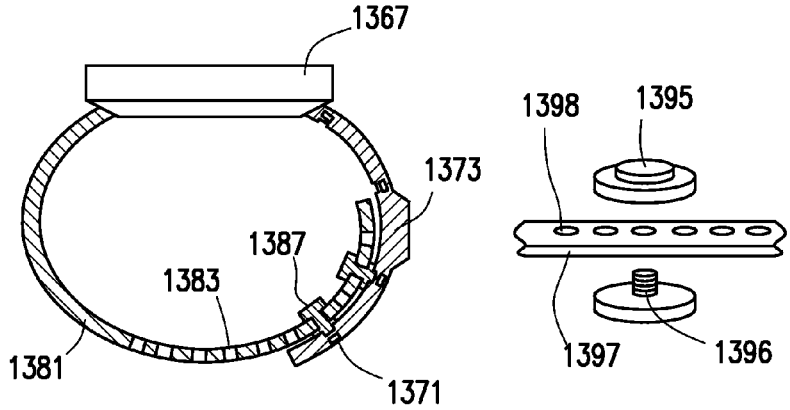

FIG.13H

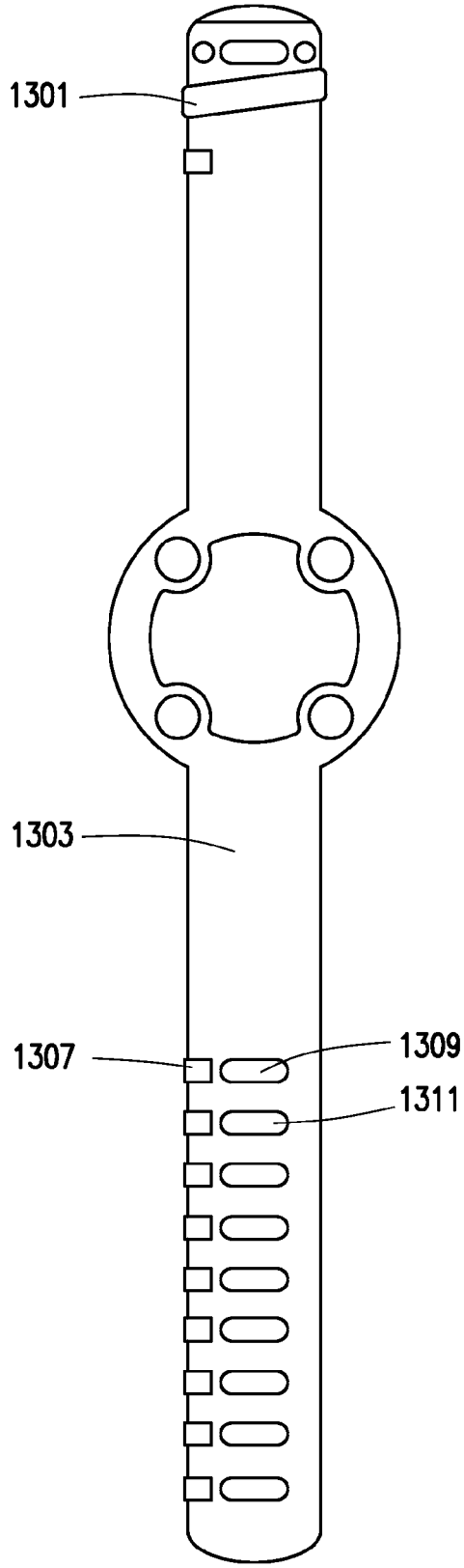

FIG. 13I

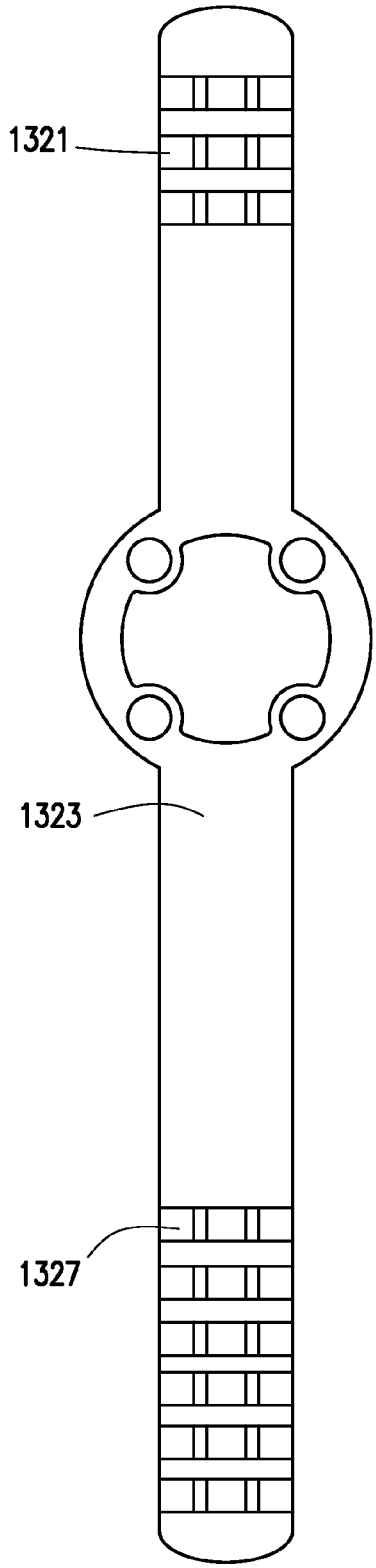

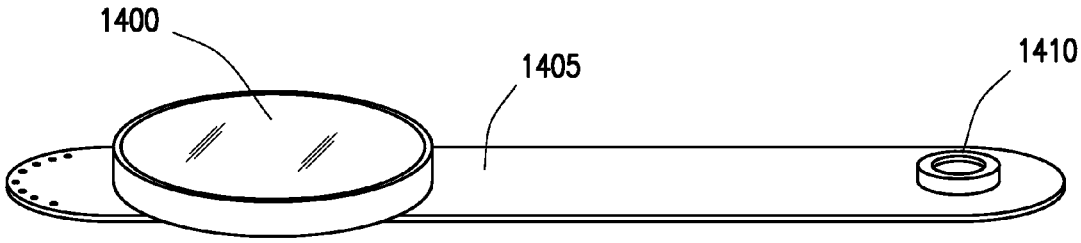

FIG. 14A

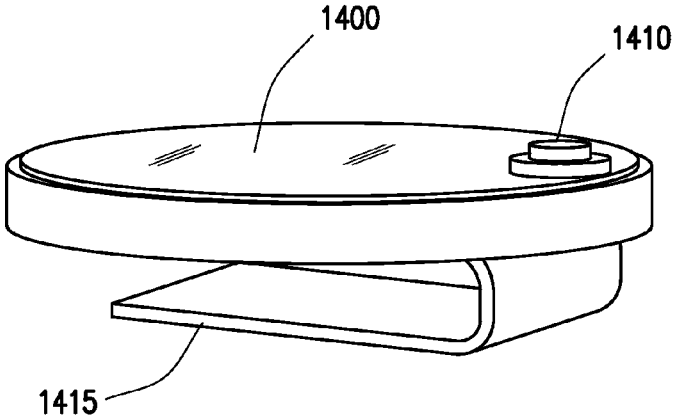

FIG. 14B

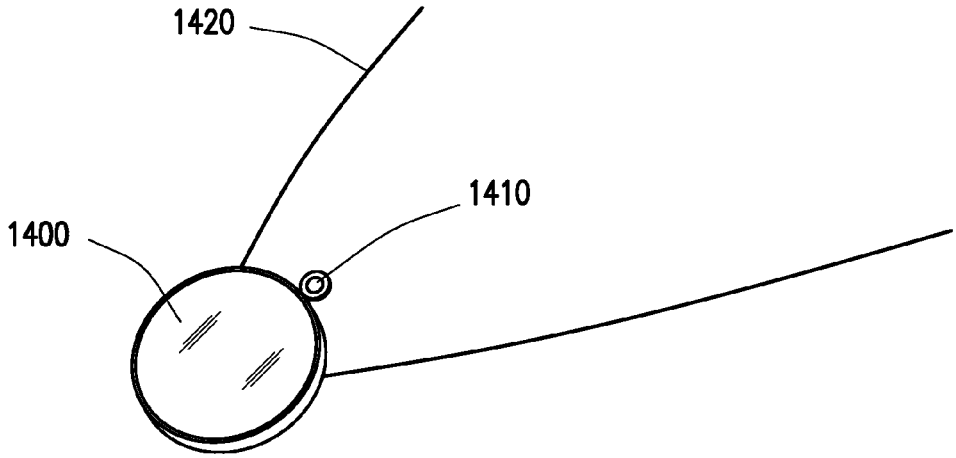

FIG. 14C

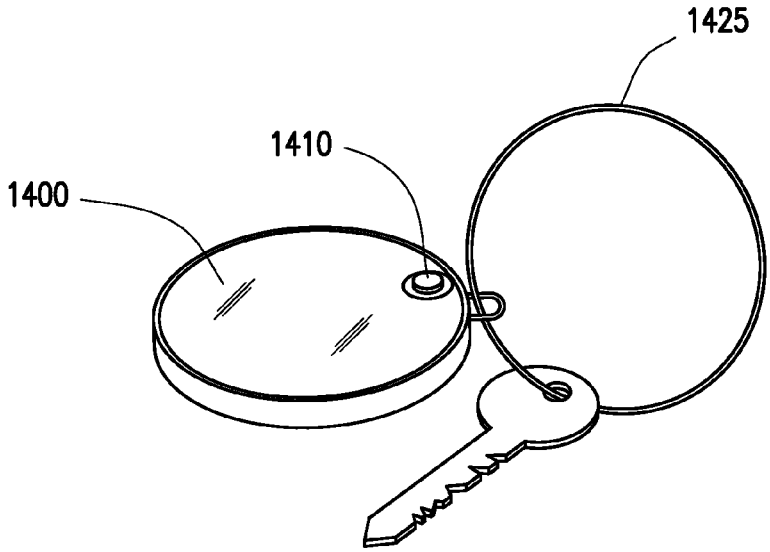

FIG. 14D

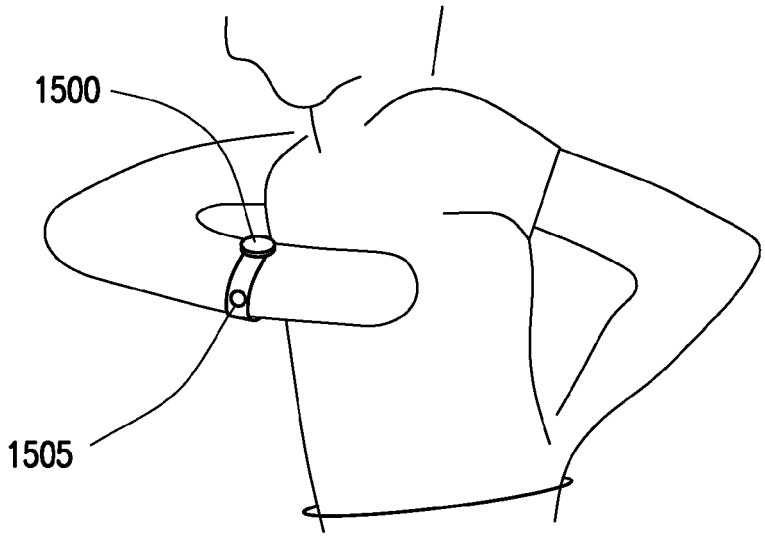

FIG. 15

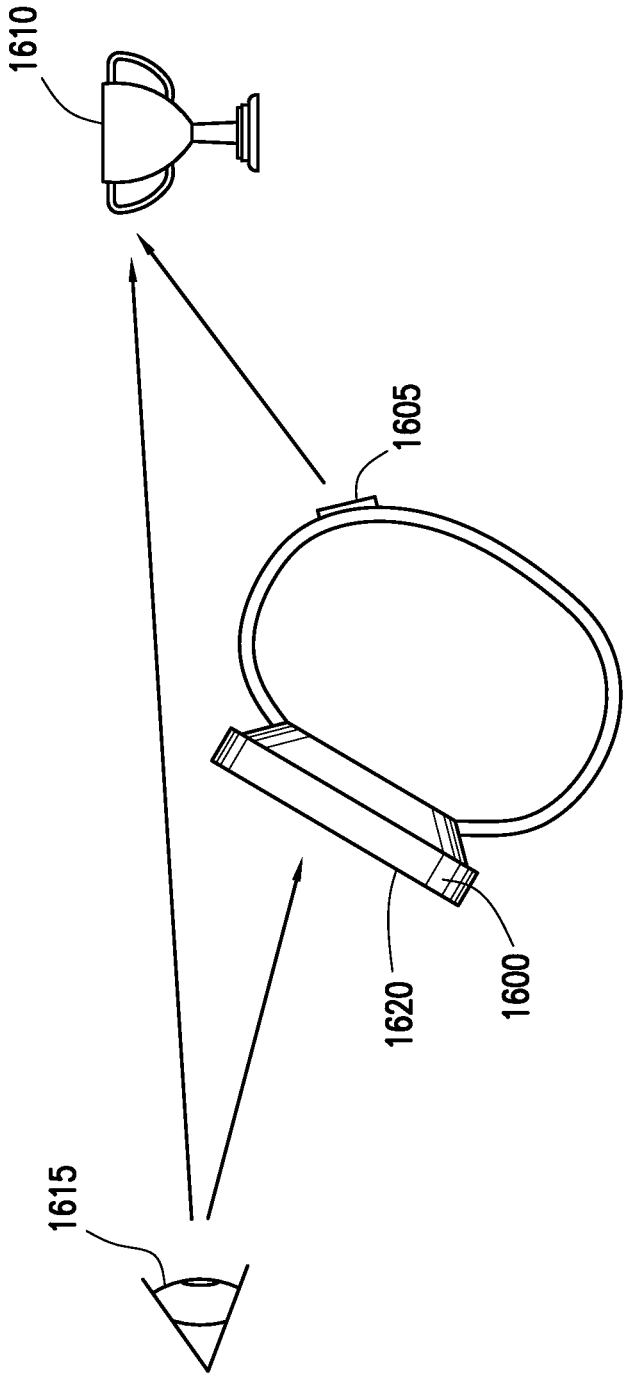

FIG. 16

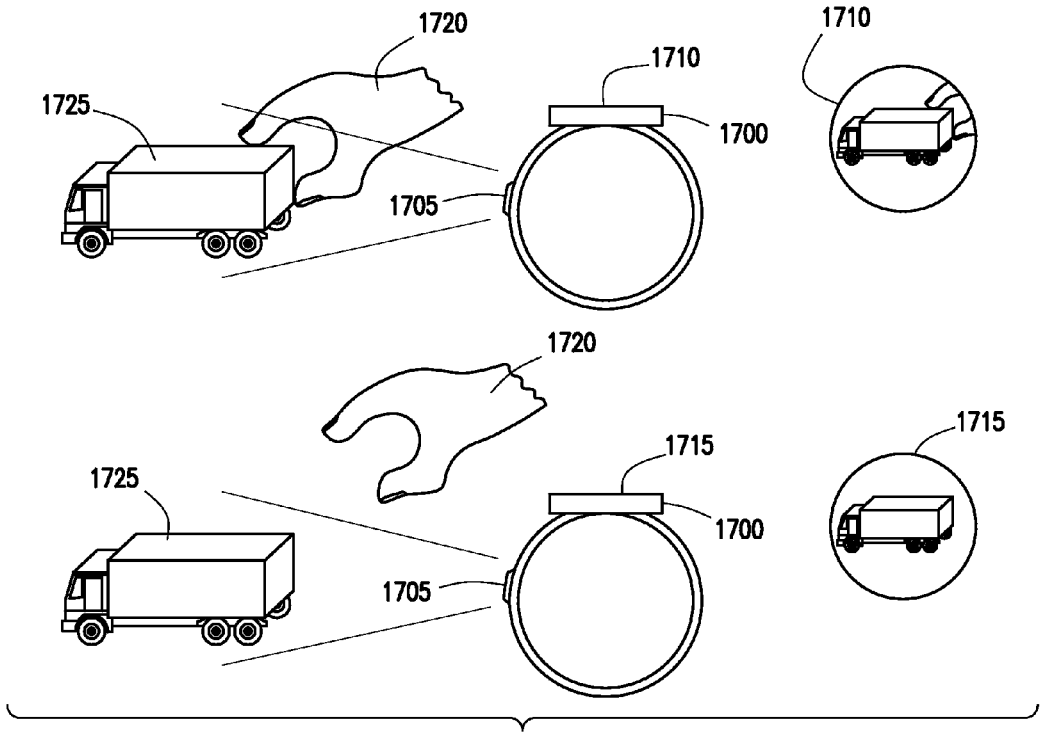

FIG. 17

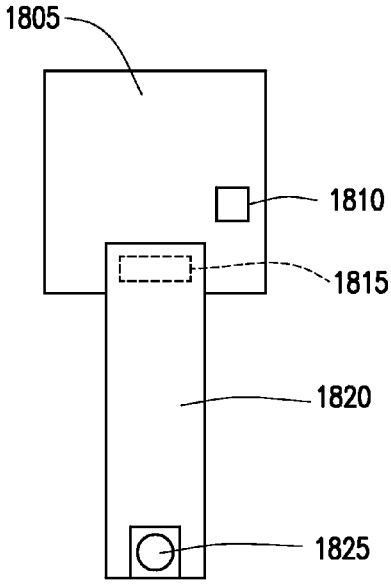

FIG. 18A

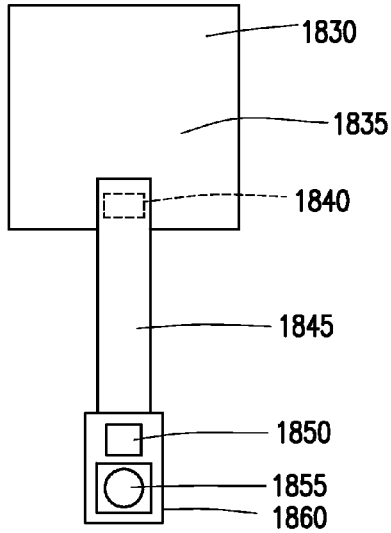

FIG. 18B

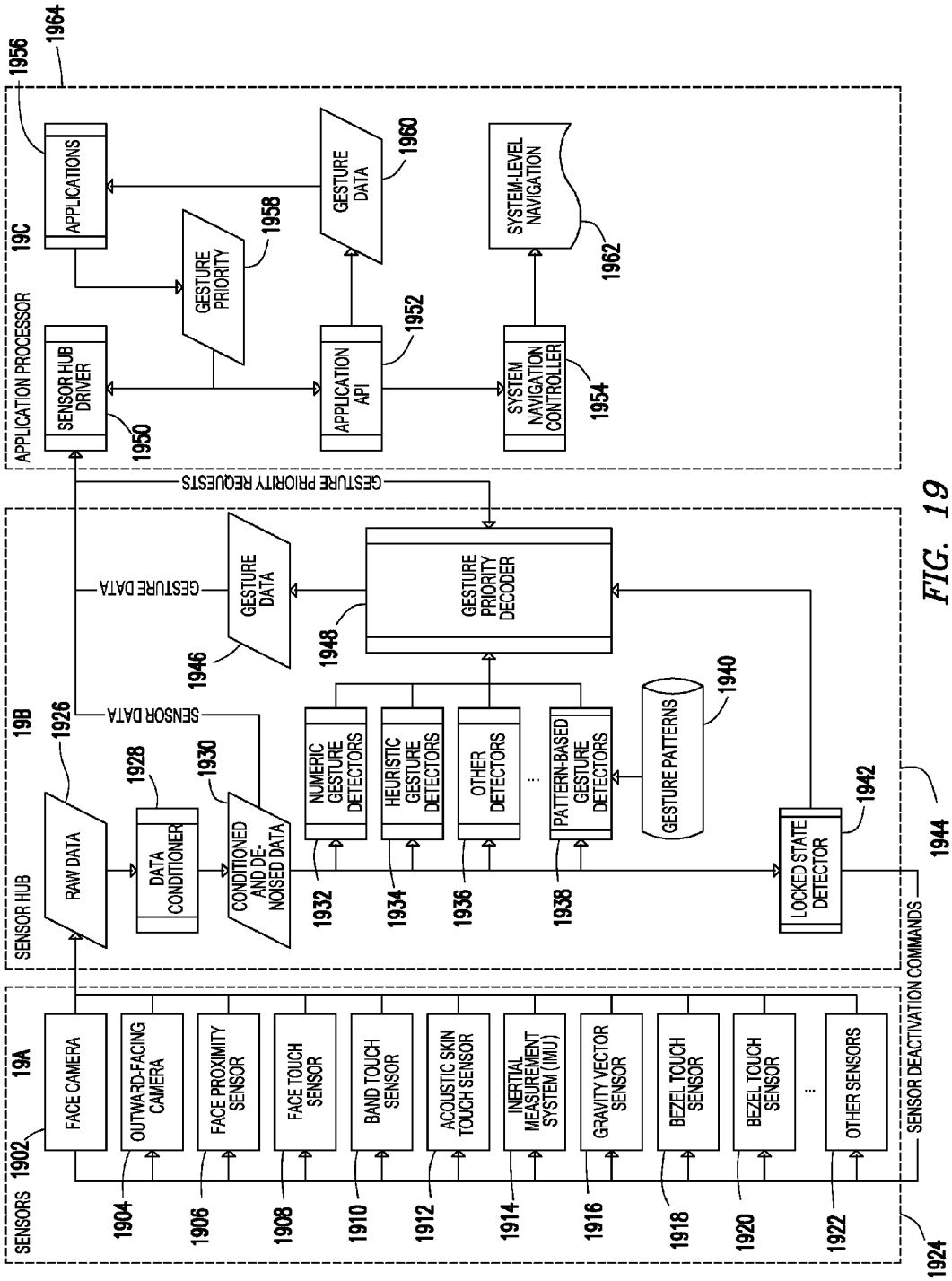
APPLICATION PROCESSOR
19C
1956
1964
APPLICATIONS
GESTURE PRIORITY
1958
GESTURE DATA
1960
SYSTEM-LEVEL NAVIGATION
1962
SENSOR HUB DRIVER
1950
APPLICATION API
1952
SYSTEM NAVIGATION CONTROLLER
1954
GESTURE PRIORITY REQUESTS
SENSOR HUB
19B
RAW DATA
1926
DATA CONDITIONER
1928
CONDITIONED AND DE-NOISED DATA
1930
SENSOR DATA
GESTURE DATA
1946
GESTURE PRIORITY DECODER
1948
NUMERIC GESTURE DETECTORS
1932
HEURISTIC GESTURE DETECTORS
1934
OTHER DETECTORS
1936
PATTERN-BASED GESTURE DETECTORS
1938
GESTURE PATTERNS
1940
LOCKED STATE DETECTOR
1942
1944
SENSOR DEACTIVATION COMMANDS
SENSORS
19A
1902
FACE CAMERA
1904
OUTWARD-FACING CAMERA
1906
FACE PROXIMITY SENSOR
1908
FACE TOUCH SENSOR
1910
BAND TOUCH SENSOR
1912
ACOUSTIC SKIN TOUCH SENSOR
1914
INERTIAL MEASUREMENT SYSTEM (IMU)
1916
GRAVITY VECTOR SENSOR
1918
BEZEL TOUCH SENSOR
1920
BEZEL TOUCH SENSOR
1922
OTHER SENSORS
1924

FIG. 19

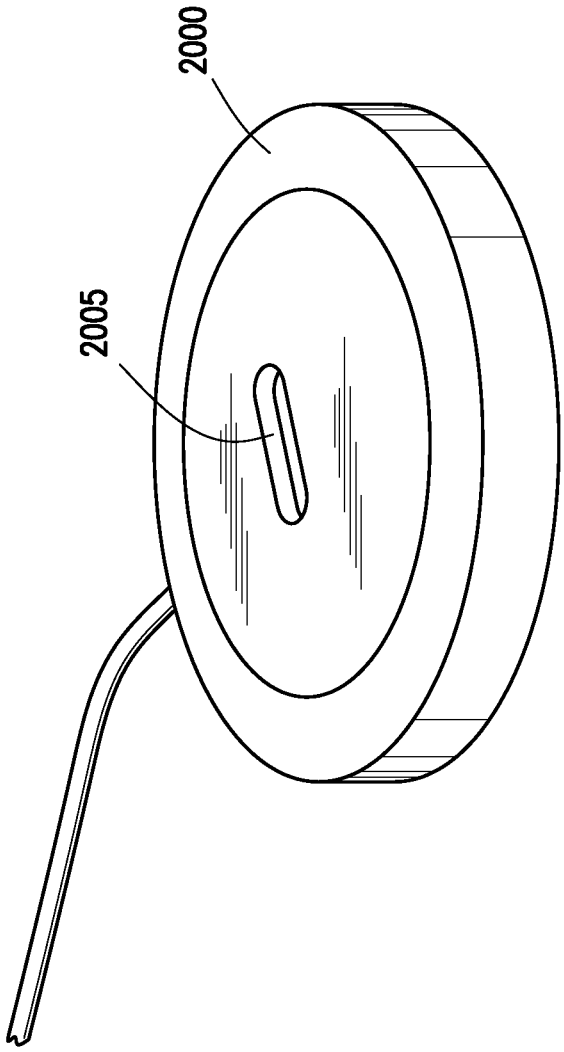

FIG. 20A

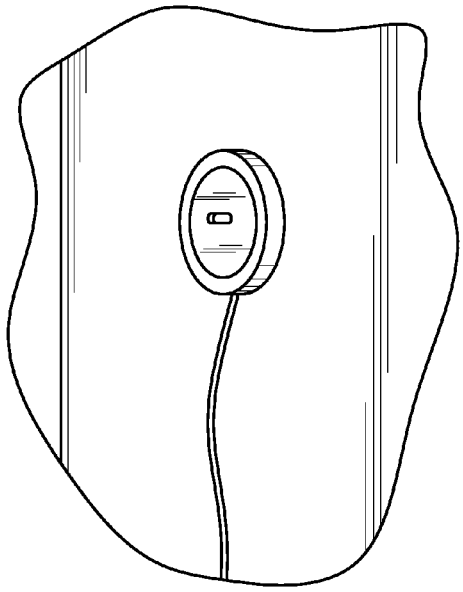

FIG. 20B

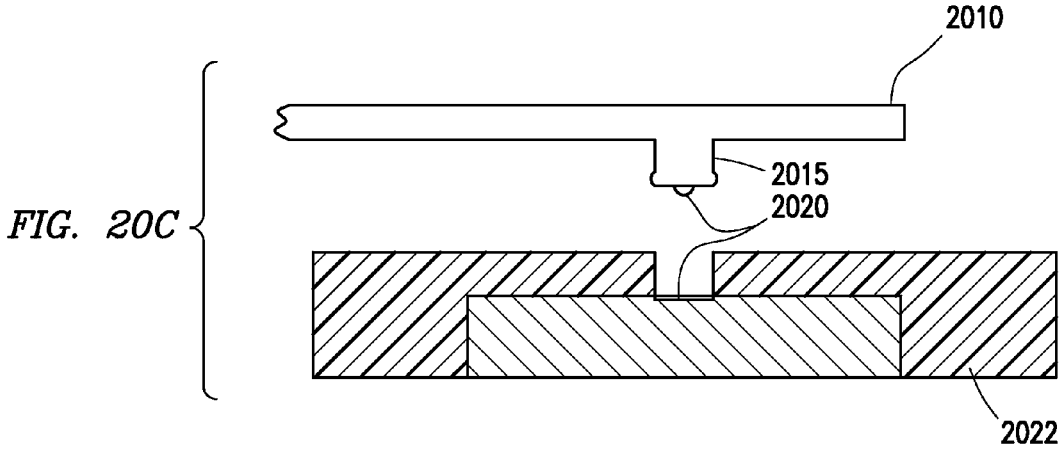

FIG. 20C

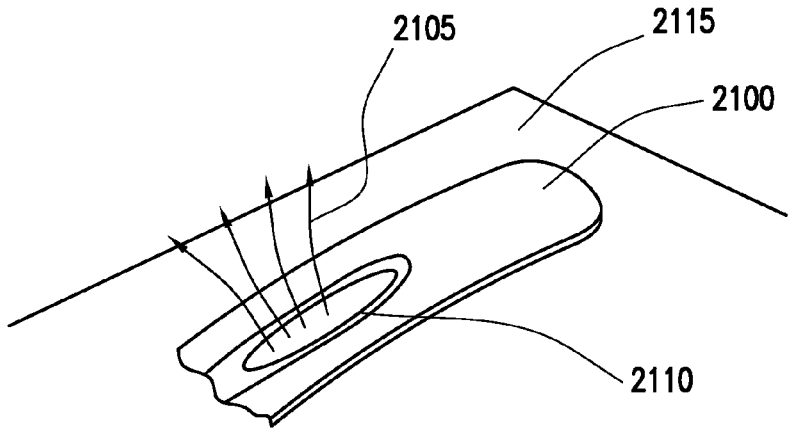

FIG. 21A

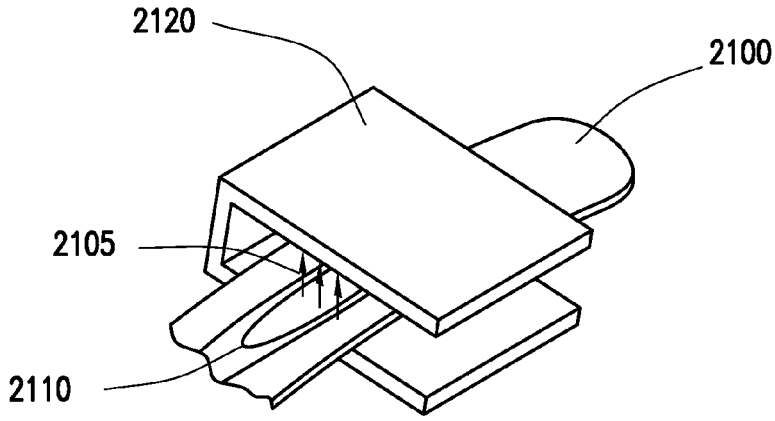

FIG. 21B

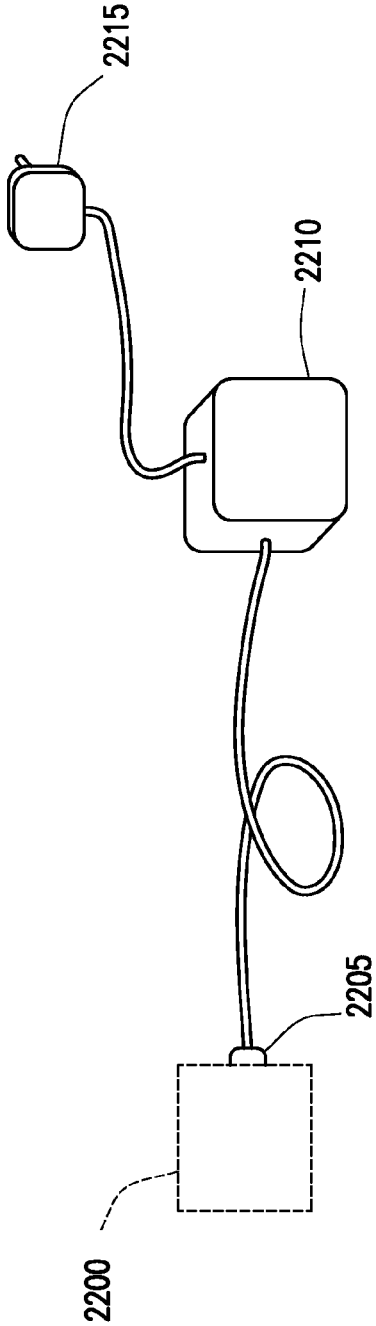

FIG. 22A

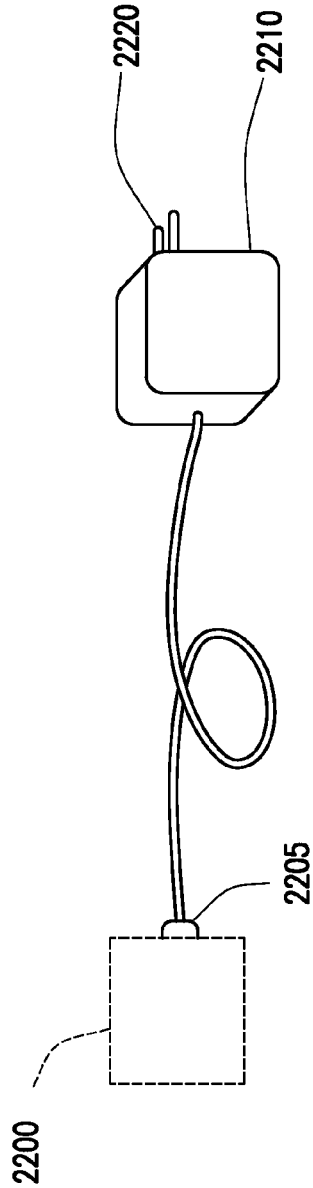

FIG. 22B

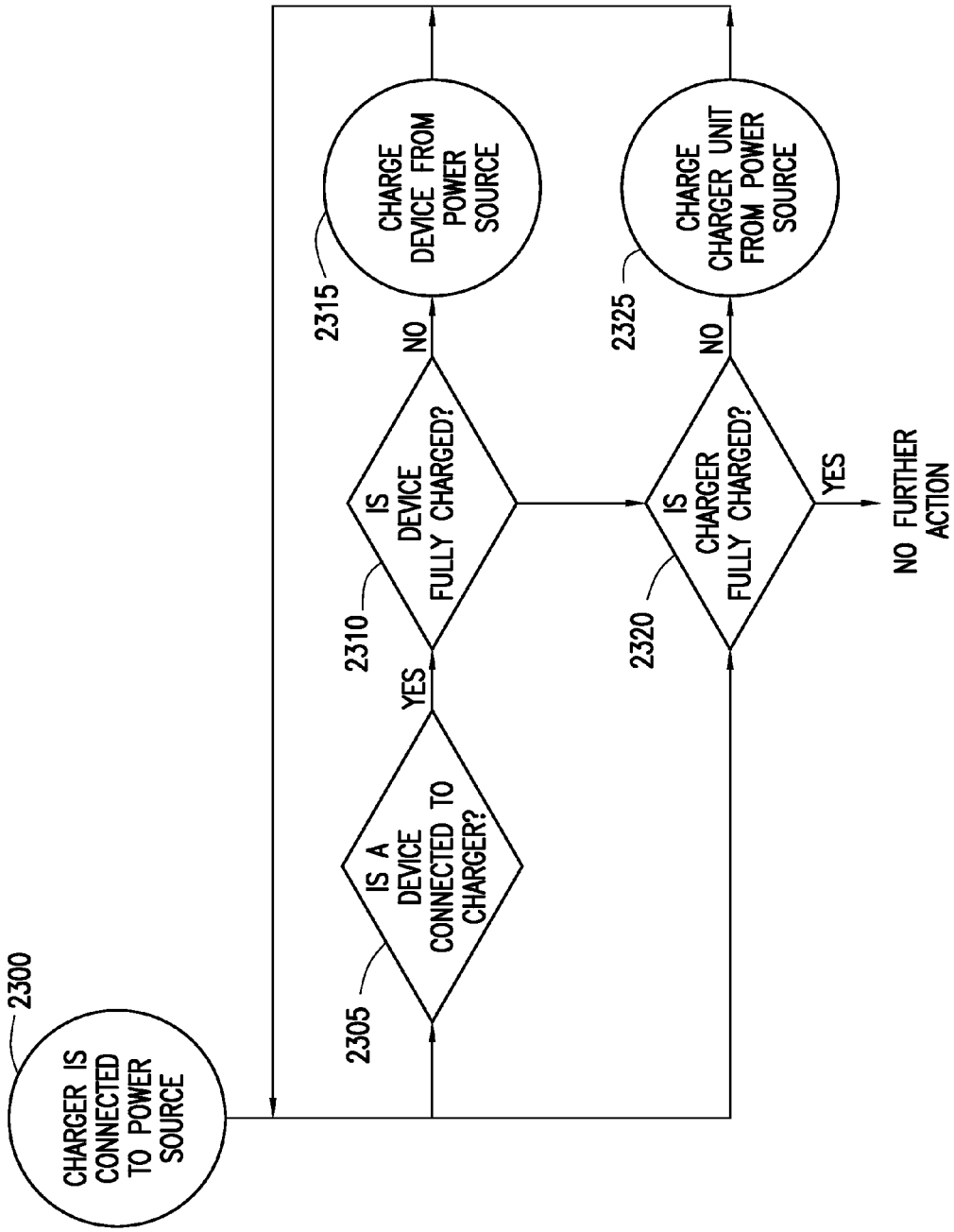
2300
CHARGER IS CONNECTED TO POWER SOURCE
2305
IS A DEVICE CONNECTED TO CHARGER?
YES
2310
IS DEVICE FULLY CHARGED?
NO
2315
CHARGE DEVICE FROM POWER SOURCE
2320
IS CHARGER FULLY CHARGED?
NO
2325
CHARGE CHARGER UNIT FROM POWER SOURCE
YES
NO FURTHER ACTION

FIG. 23

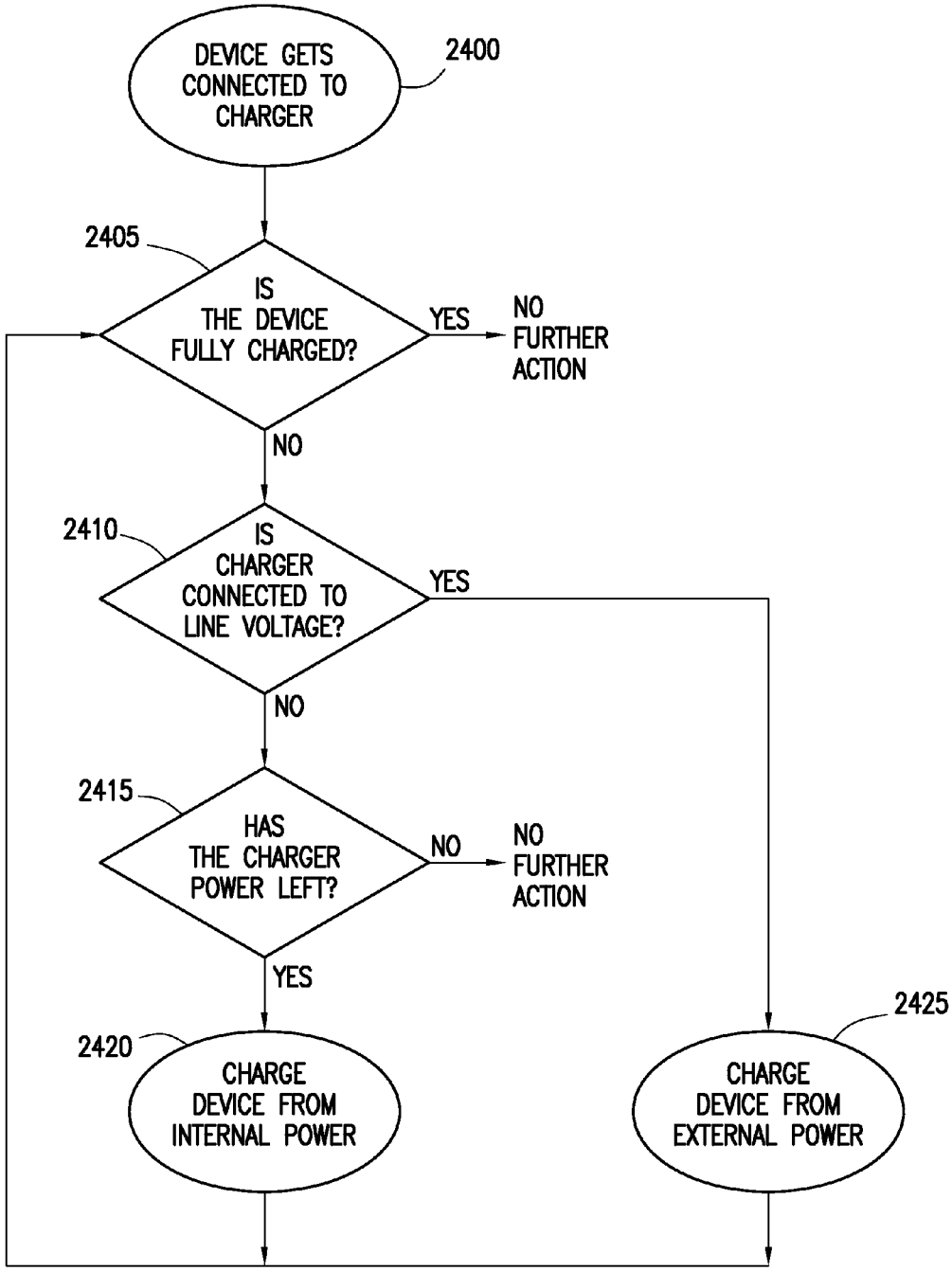
DEVICE GETS CONNECTED TO CHARGER
2400
2405
IS THE DEVICE FULLY CHARGED?
YES
NO FURTHER ACTION
NO
2410
IS CHARGER CONNECTED TO LINE VOLTAGE?
YES
NO
2415
HAS THE CHARGER POWER LEFT?
NO
NO FURTHER ACTION
YES
2420
CHARGE DEVICE FROM INTERNAL POWER
2425
CHARGE DEVICE FROM EXTERNAL POWER

FIG. 24

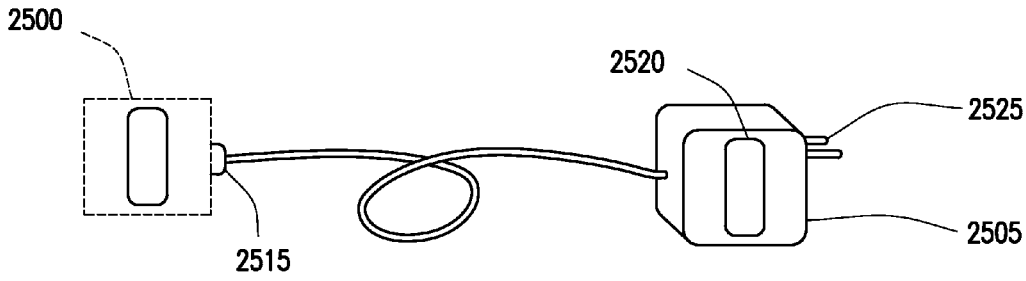

FIG. 25A

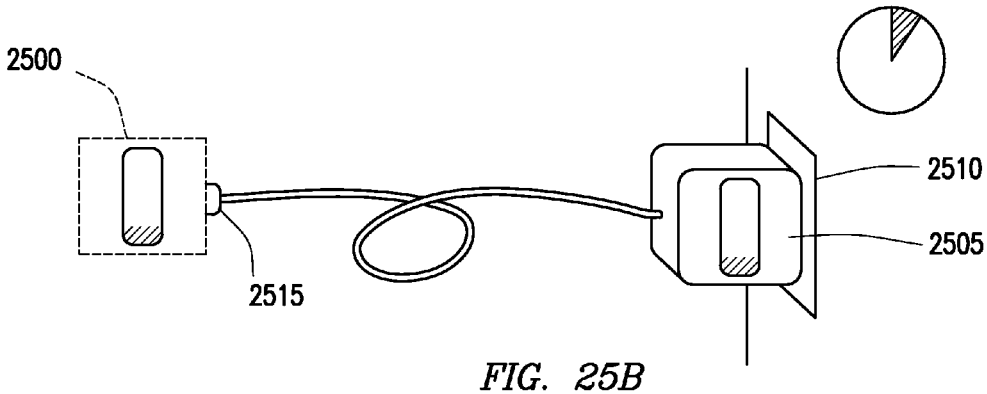

FIG. 25B

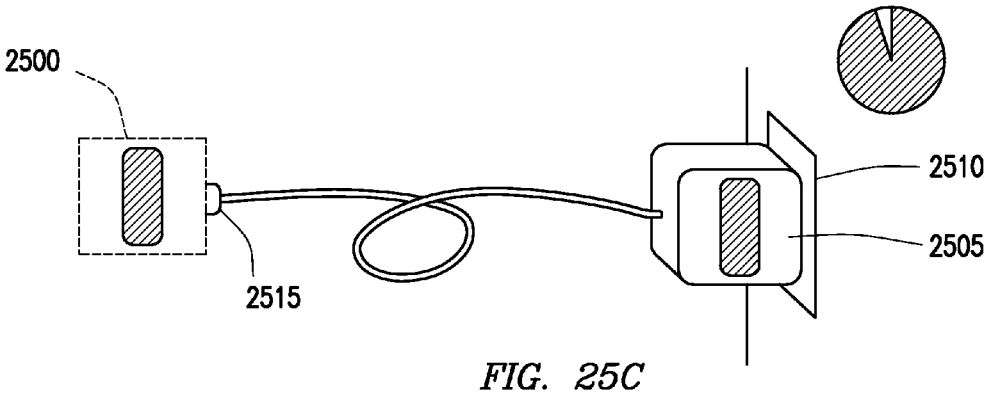

FIG. 25C

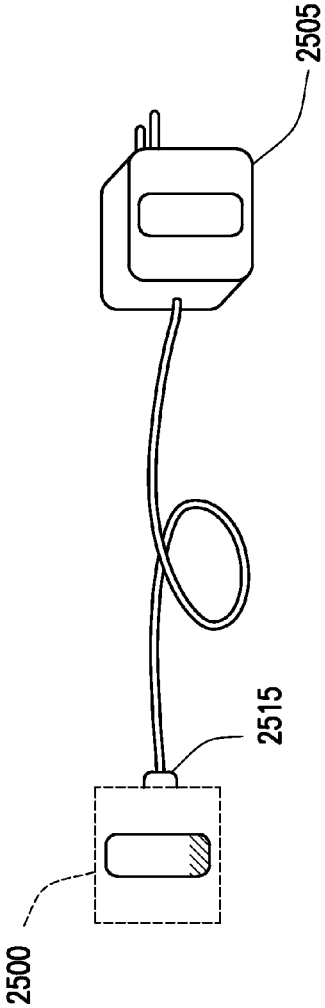

FIG. 25D

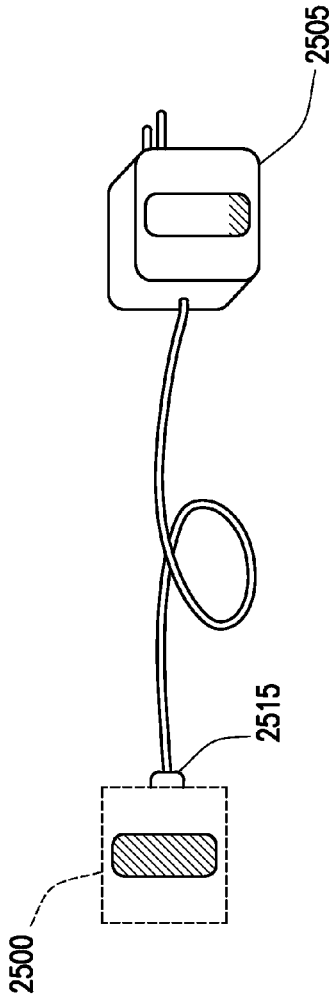

FIG. 25E

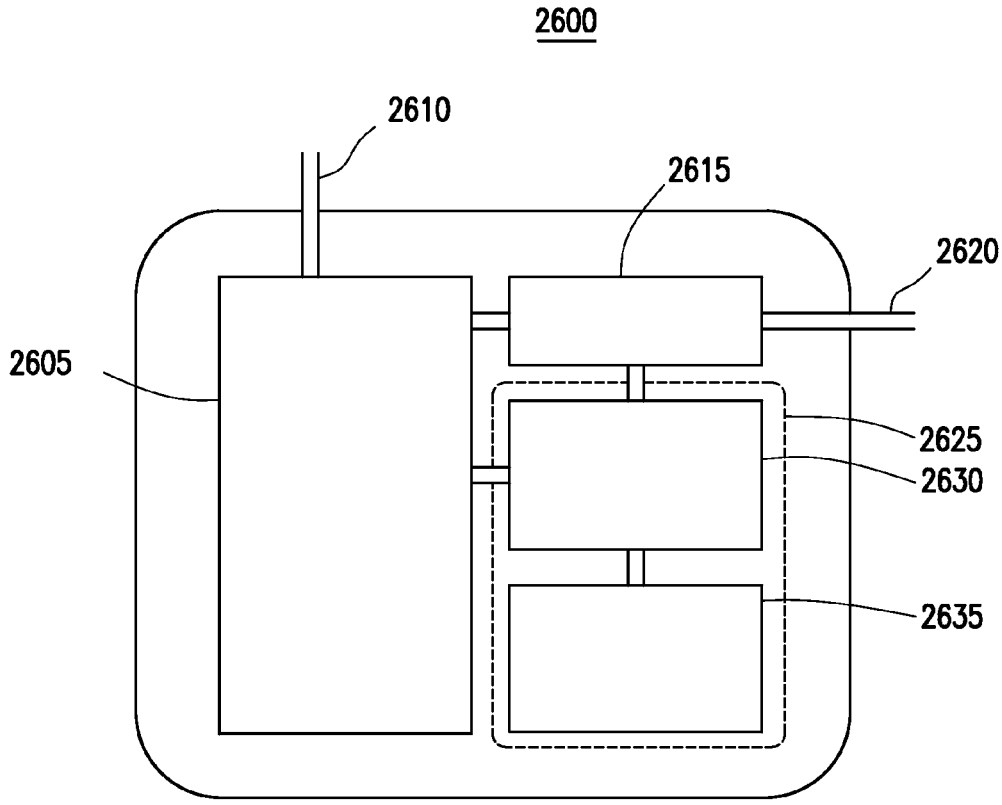

FIG. 26

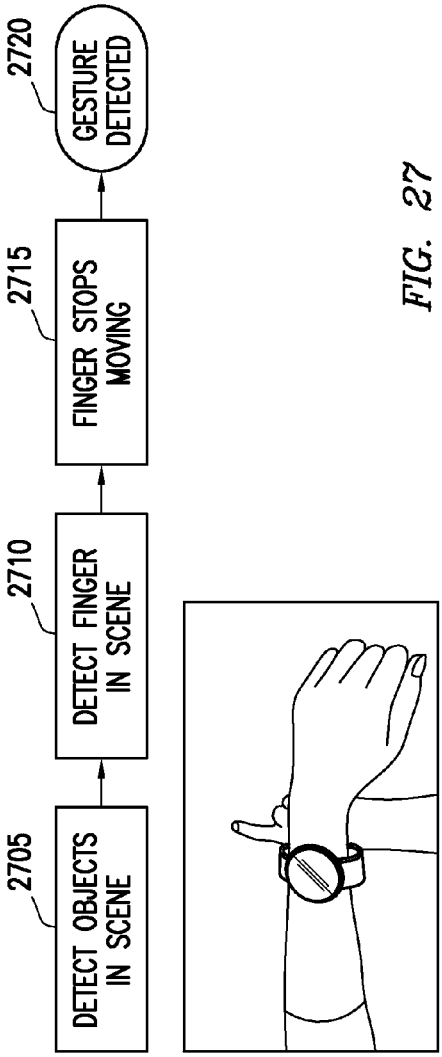
2705
DETECT OBJECTS IN SCENE
2710
DETECT FINGER IN SCENE
2715
FINGER STOPS MOVING
2720
GESTURE DETECTED

FIG. 27

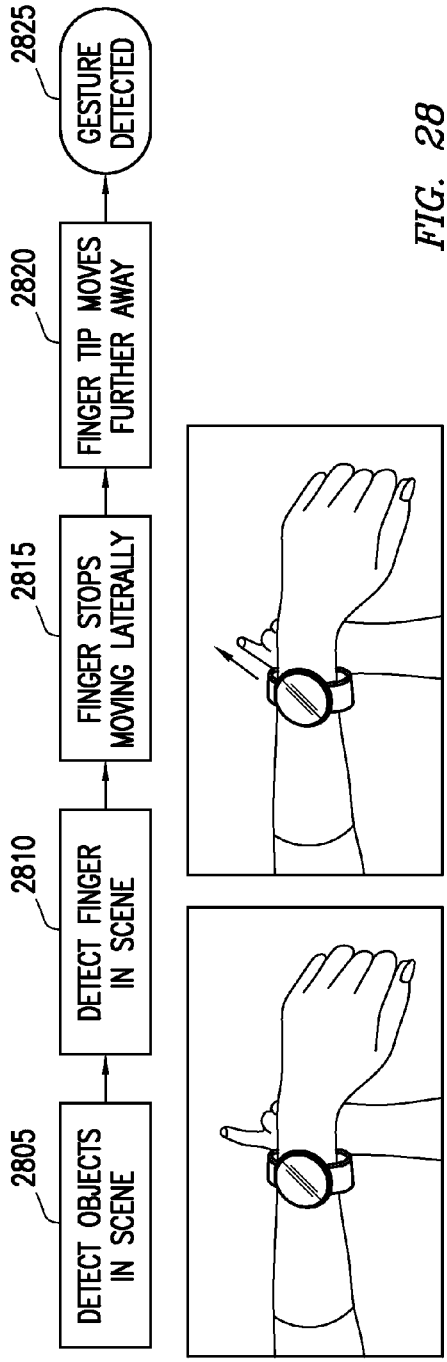
2805
DETECT OBJECTS IN SCENE
2810
DETECT FINGER IN SCENE
2815
FINGER STOPS MOVING LATERALLY
2820
FINGER TIP MOVES FURTHER AWAY
2825
GESTURE DETECTED

FIG. 28

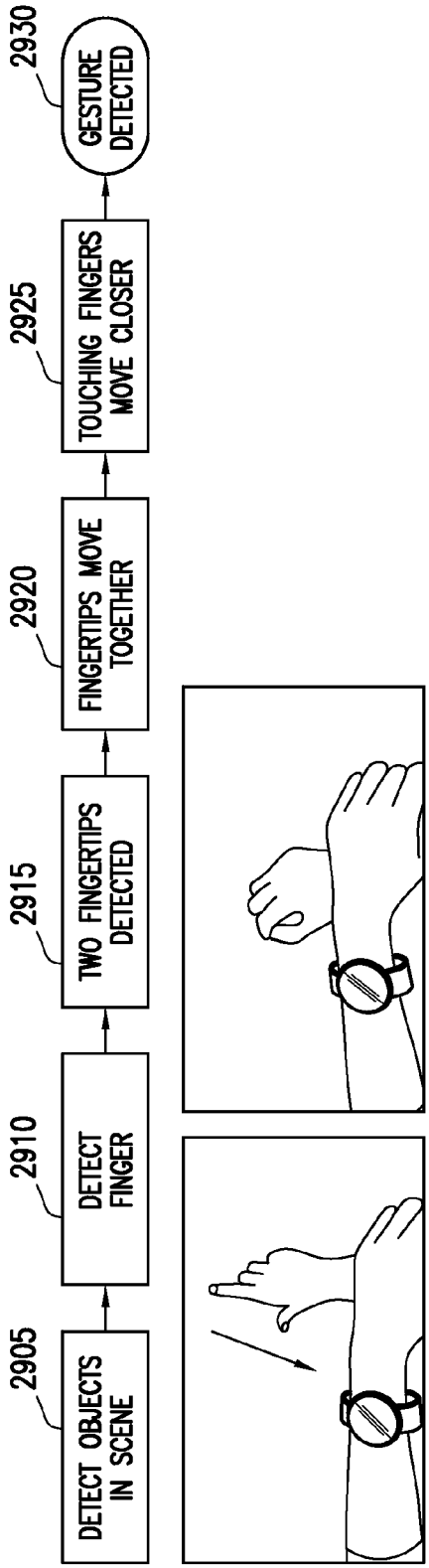
2905
DETECT OBJECTS IN SCENE
2910
DETECT FINGER
2915
TWO FINGERTIPS DETECTED
2920
FINGERTIPS MOVE TOGETHER
2925
TOUCHING FINGERS MOVE CLOSER
2930
GESTURE DETECTED

FIG. 29

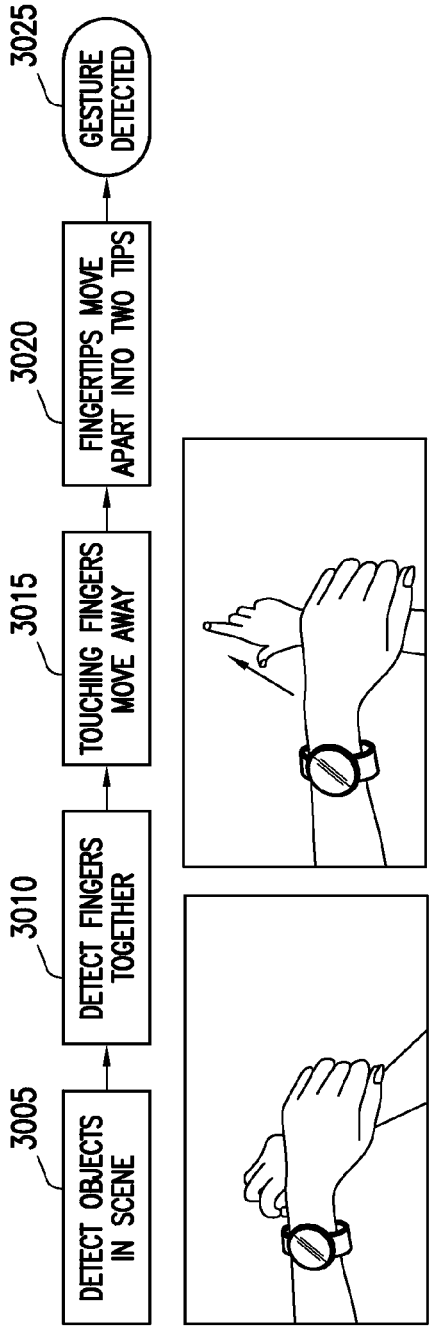
3005
DETECT OBJECTS IN SCENE
3010
DETECT FINGERS TOGETHER
3015
TOUCHING FINGERS MOVE AWAY
3020
FINGERTIPS MOVE APART INTO TWO TIPS
3025
GESTURE DETECTED

FIG. 30

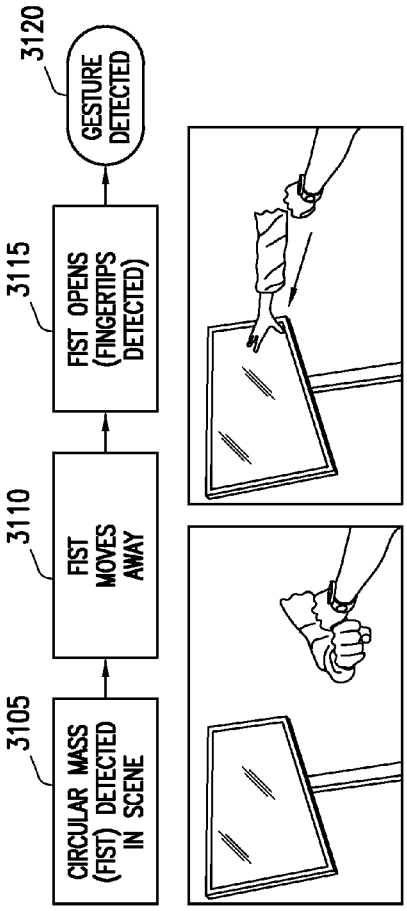
3105
CIRCULAR MASS (FIST) DETECTED IN SCENE
3110
FIST MOVES AWAY
3115
FIST OPENS (FINGERTIPS DETECTED)
3120
GESTURE DETECTED

FIG. 31

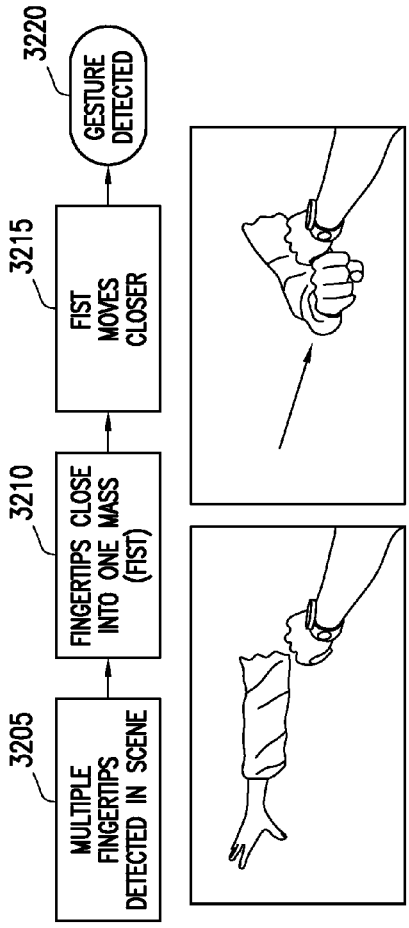
3205
MULTIPLE FINGERTIPS DETECTED IN SCENE
3210
FINGERTIPS CLOSE INTO ONE MASS (FIST)
3215
FIST MOVES CLOSER
3220
GESTURE DETECTED

FIG. 32

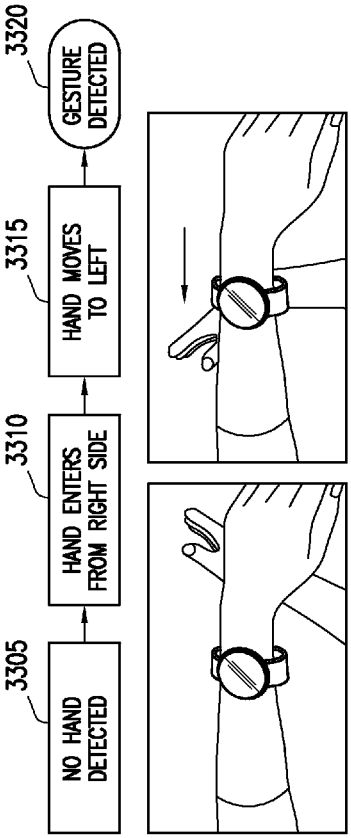
3305
NO HAND DETECTED
3310
HAND ENTERS FROM RIGHT SIDE
3315
HAND MOVES TO LEFT
3320
GESTURE DETECTED

FIG. 33

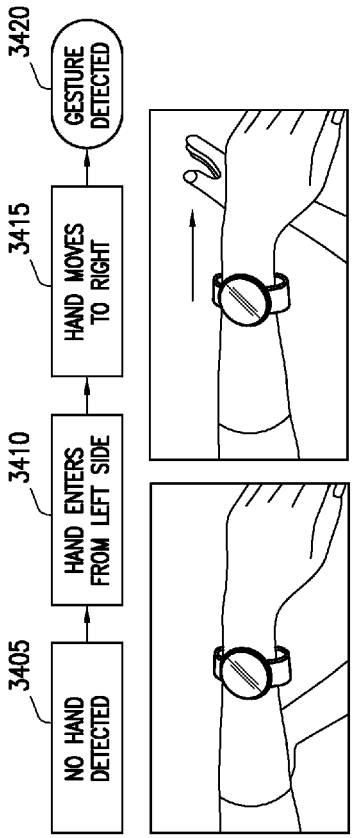
3405
NO HAND DETECTED
3410
HAND ENTERS FROM LEFT SIDE
3415
HAND MOVES TO RIGHT
3420
GESTURE DETECTED

FIG. 34

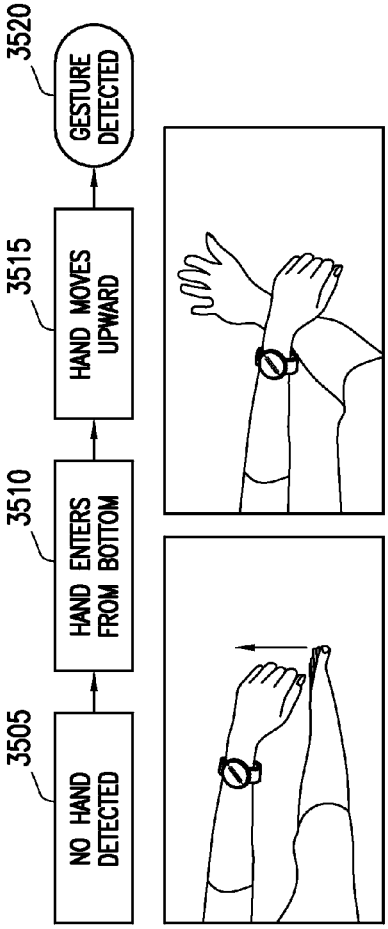
3505
NO HAND DETECTED
3510
HAND ENTERS FROM BOTTOM
3515
HAND MOVES UPWARD
3520
GESTURE DETECTED

FIG. 35

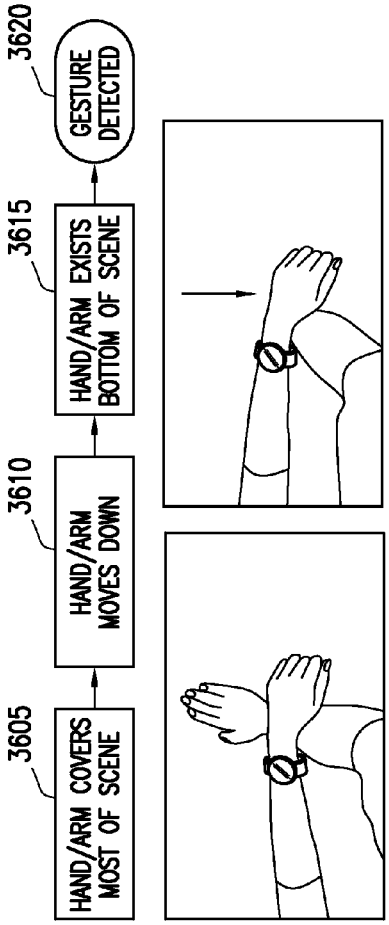
3605
HAND/ARM COVERS MOST OF SCENE
3610
HAND/ARM MOVES DOWN
3615
HAND/ARM EXISTS BOTTOM OF SCENE
3620
GESTURE DETECTED

FIG. 36

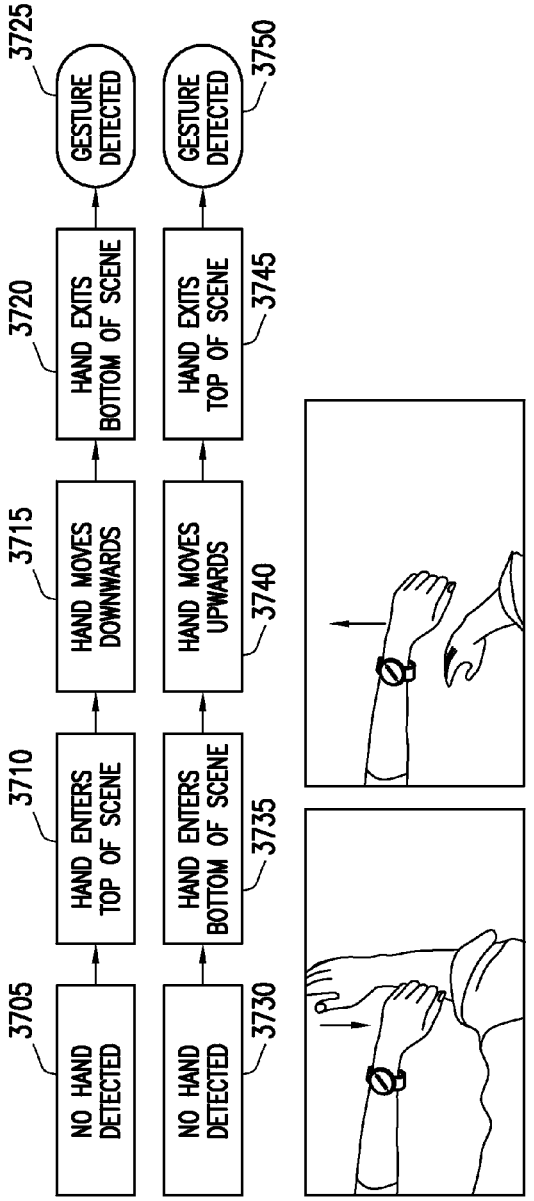
3705
NO HAND DETECTED
3710
HAND ENTERS TOP OF SCENE
3715
HAND MOVES DOWNWARDS
3720
HAND EXITS BOTTOM OF SCENE
3725
GESTURE DETECTED
3730
NO HAND DETECTED
3735
HAND ENTERS BOTTOM OF SCENE
3740
HAND MOVES UPWARDS
3745
HAND EXITS TOP OF SCENE
3750
GESTURE DETECTED

FIG. 37

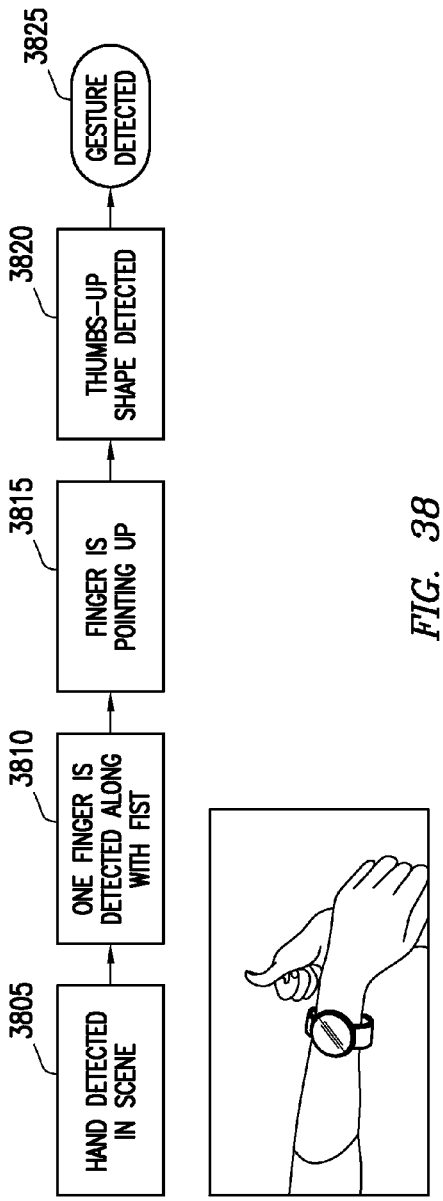
3805
HAND DETECTED IN SCENE
3810
ONE FINGER IS DETECTED ALONG WITH FIST
3815
FINGER IS POINTING UP
3820
THUMBS-UP SHAPE DETECTED
3825
GESTURE DETECTED

FIG. 38

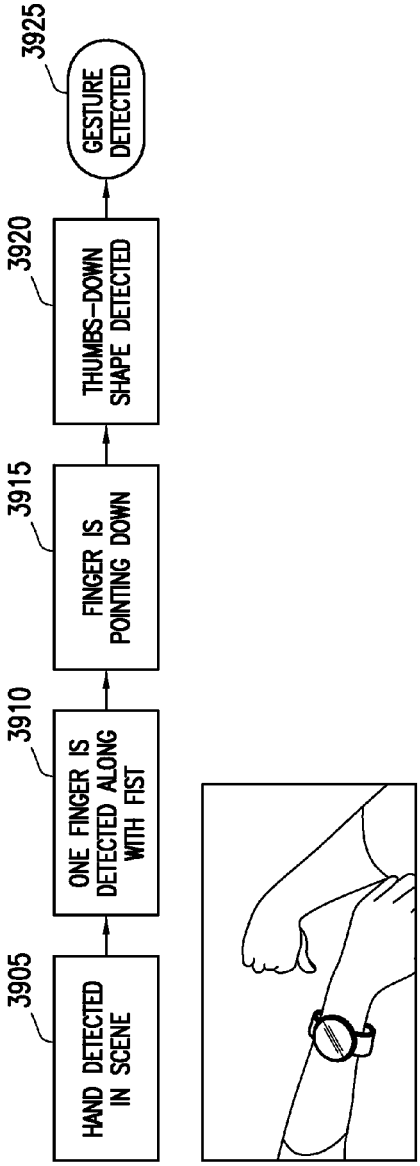
3905
HAND DETECTED IN SCENE
3910
ONE FINGER IS DETECTED ALONG WITH FIST
3915
FINGER IS POINTING DOWN
3920
THUMBS-DOWN SHAPE DETECTED
3925
GESTURE DETECTED

FIG. 39

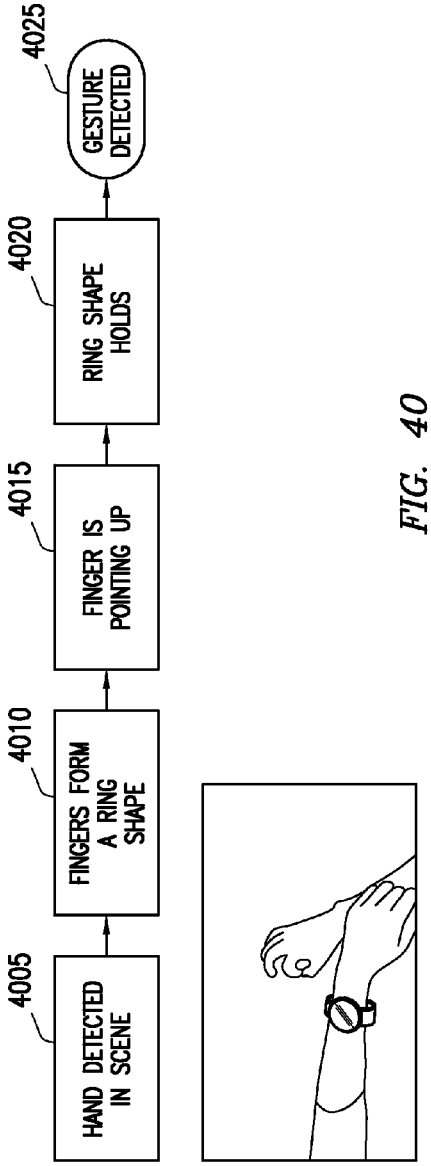
4005
HAND DETECTED IN SCENE
4010
FINGERS FORM A RING SHAPE
4015
FINGER IS POINTING UP
4020
RING SHAPE HOLDS
4025
GESTURE DETECTED

FIG. 40

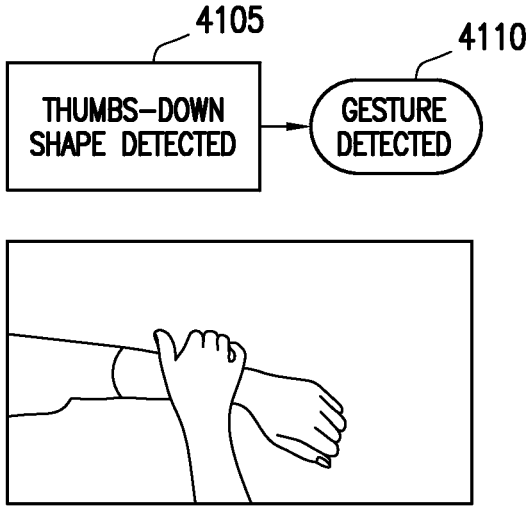
4105
4110
THUMBS-DOWN SHAPE DETECTED
GESTURE DETECTED

FIG. 41

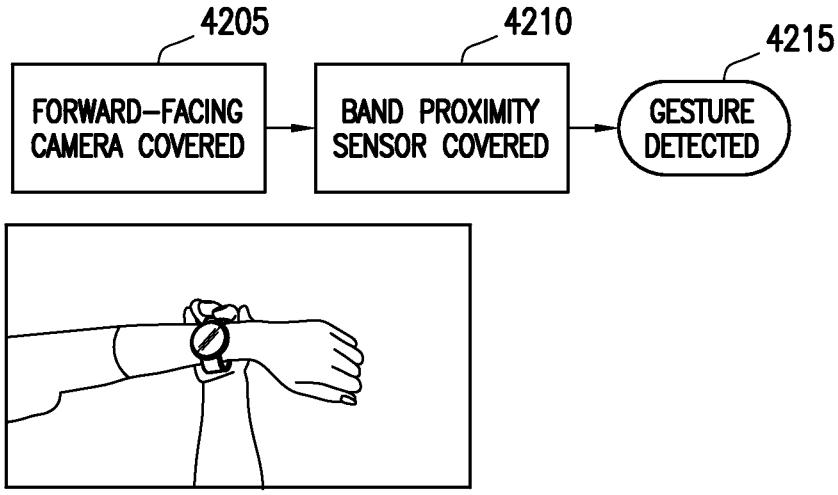
4205
4210
4215
FORWARD-FACING CAMERA COVERED
BAND PROXIMITY SENSOR COVERED
GESTURE DETECTED

FIG. 42

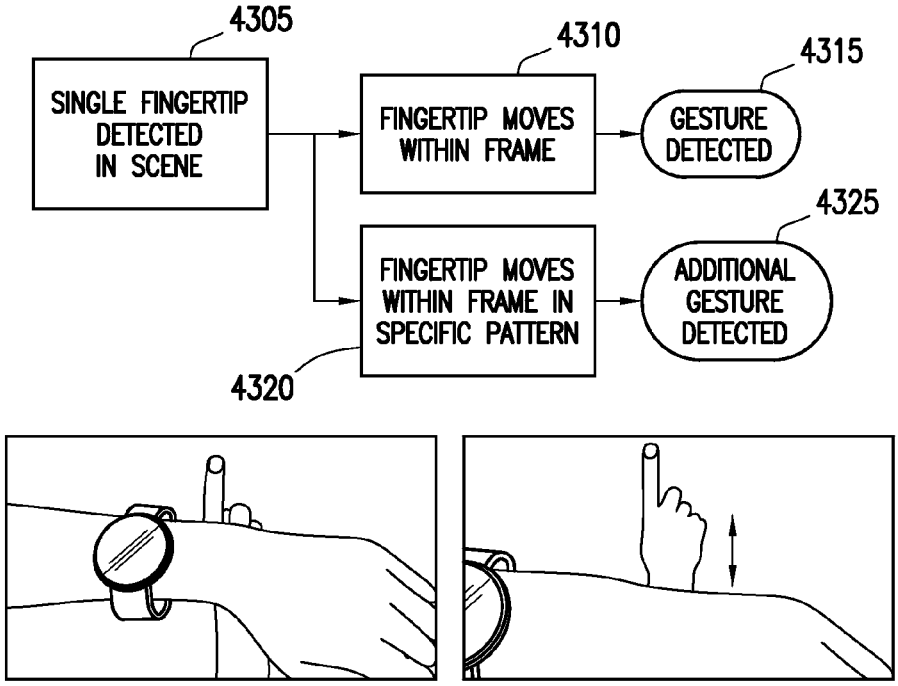
4305
SINGLE FINGERTIP DETECTED IN SCENE
4310
FINGERTIP MOVES WITHIN FRAME
4315
GESTURE DETECTED
4325
FINGERTIP MOVES WITHIN FRAME IN SPECIFIC PATTERN
ADDITIONAL GESTURE DETECTED
4320

FIG. 43

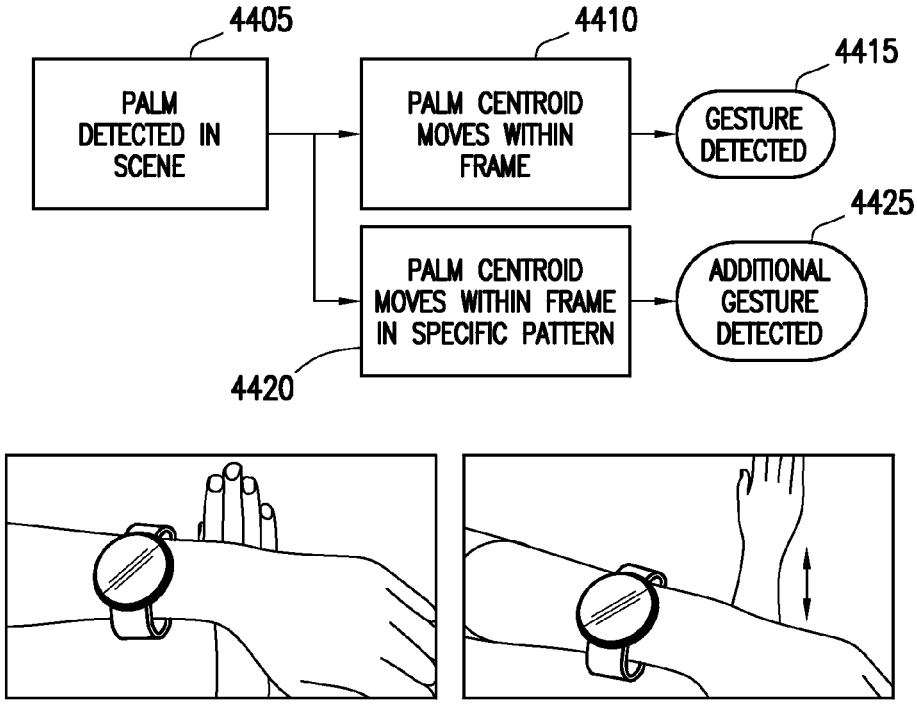
4405
PALM DETECTED IN SCENE
4410
PALM CENTROID MOVES WITHIN FRAME
4415
GESTURE DETECTED
4425
PALM CENTROID MOVES WITHIN FRAME IN SPECIFIC PATTERN
ADDITIONAL GESTURE DETECTED
4420

FIG. 44

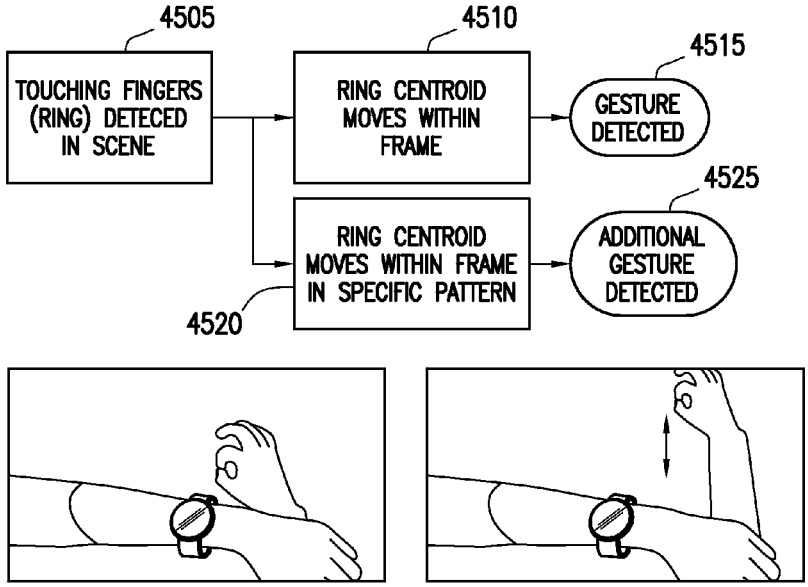
4505
TOUCHING FINGERS (RING) DETECED IN SCENE
4510
RING CENTROID MOVES WITHIN FRAME
4515
GESTURE DETECTED
4525
RING CENTROID MOVES WITHIN FRAME IN SPECIFIC PATTERN
ADDITIONAL GESTURE DETECTED
4520

FIG. 45

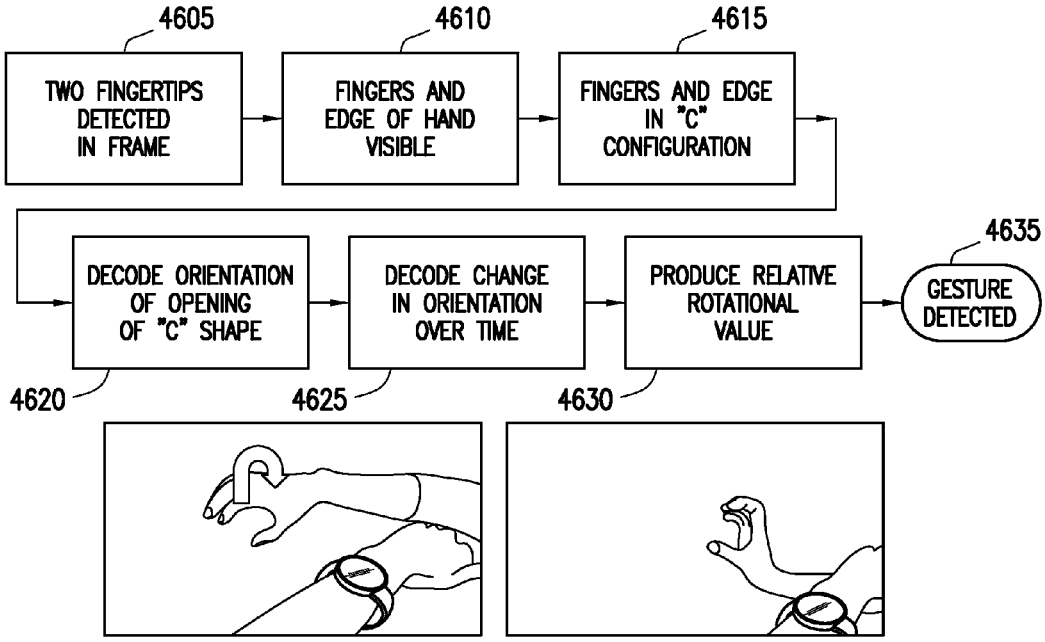
4605
TWO FINGERTIPS DETECTED IN FRAME
4610
FINGERS AND EDGE OF HAND VISIBLE
4615
FINGERS AND EDGE IN "C" CONFIGURATION
DECODE ORIENTATION OF OPENING OF "C" SHAPE
DECODE CHANGE IN ORIENTATION OVER TIME
PRODUCE RELATIVE ROTATIONAL VALUE
4635
GESTURE DETECTED
4620
4625
4630

FIG. 46

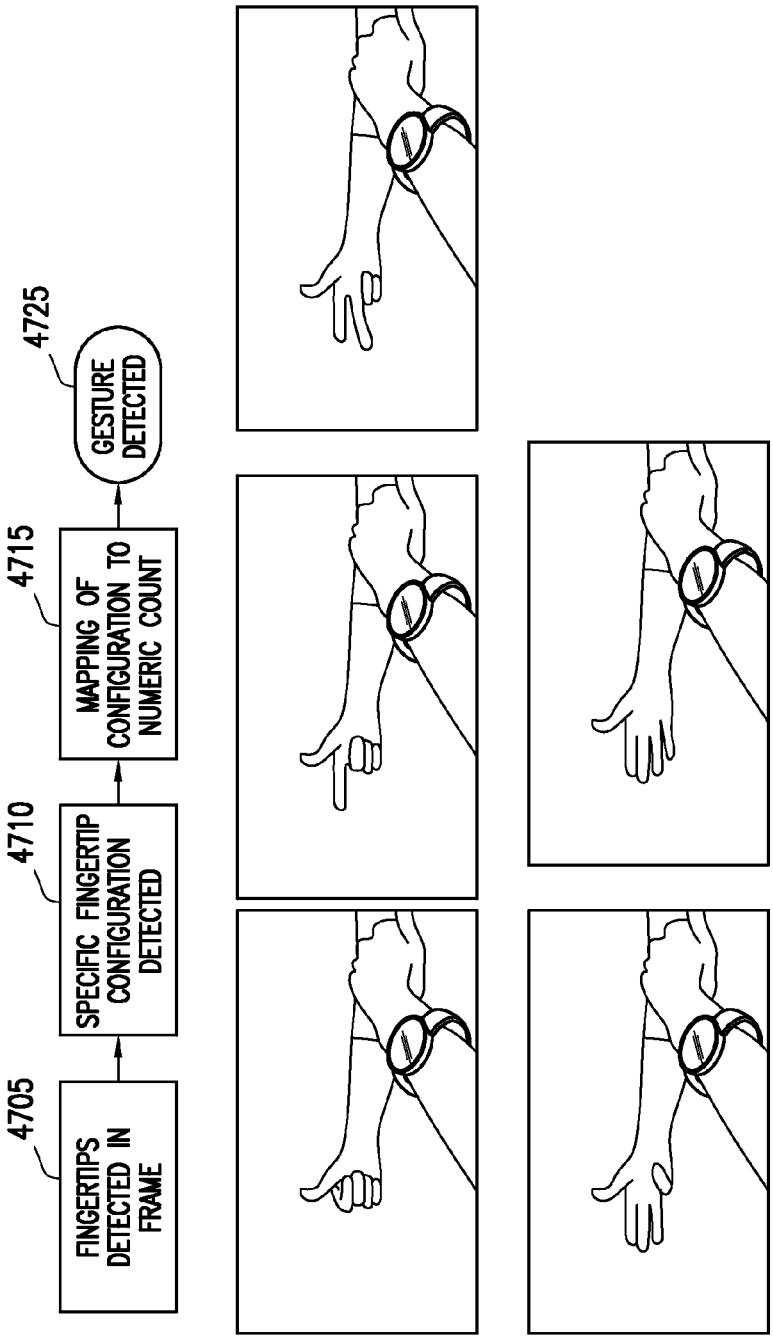
4705
FINGERTIPS DETECTED IN FRAME
4710
SPECIFIC FINGERTIP CONFIGURATION DETECTED
4715
MAPPING OF CONFIGURATION TO NUMERIC COUNT
4725
GESTURE DETECTED

FIG. 47

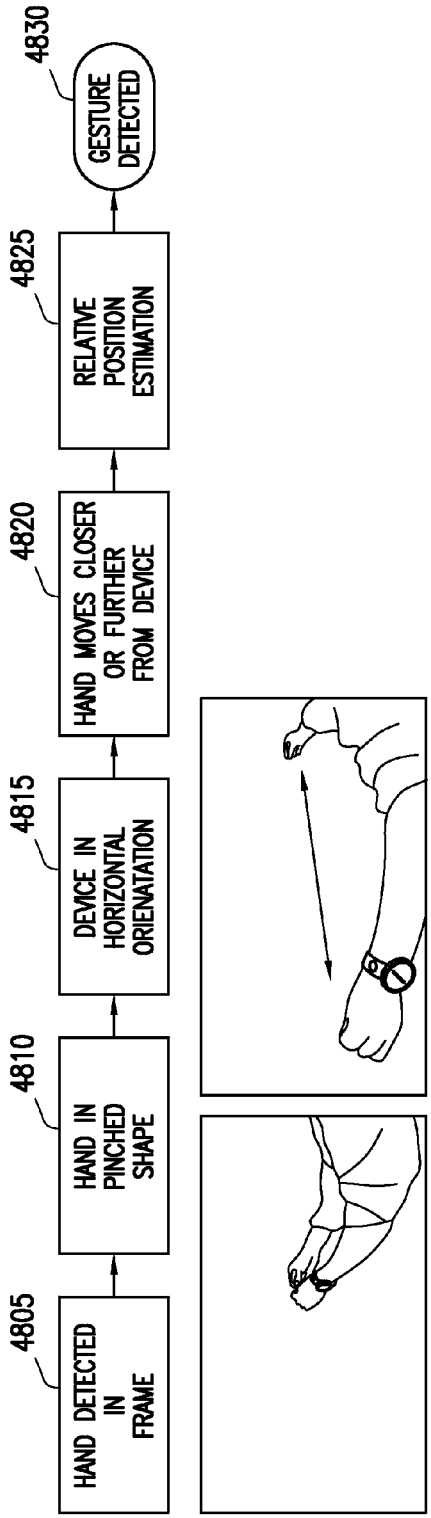
4805
HAND DETECTED IN FRAME
4810
HAND IN PINCHED SHAPE
4815
DEVICE IN HORIZONTAL ORIENATATION
4820
HAND MOVES CLOSER OR FURTHER FROM DEVICE
4825
RELATIVE POSITION ESTIMATION
4830
GESTURE DETECTED

FIG. 48

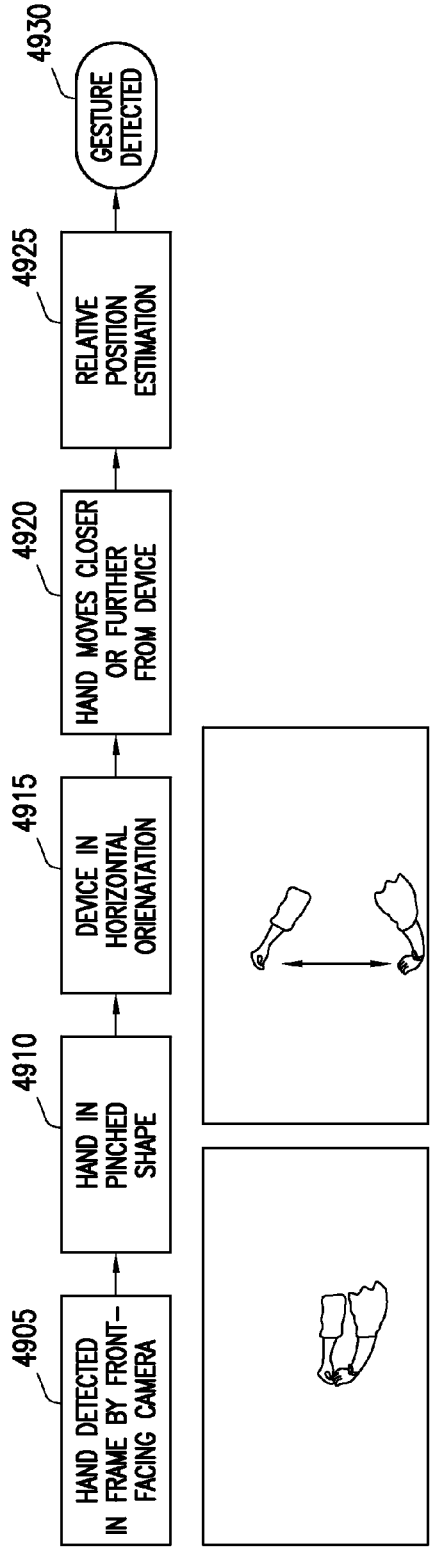
4905
HAND DETECTED IN FRAME BY FRONT-FACING CAMERA
4910
HAND IN PINCHED SHAPE
4915
DEVICE IN HORIZONTAL ORIENATATION
4920
HAND MOVES CLOSER OR FURTHER FROM DEVICE
4925
RELATIVE POSITION ESTIMATION
4930
GESTURE DETECTED

FIG. 49

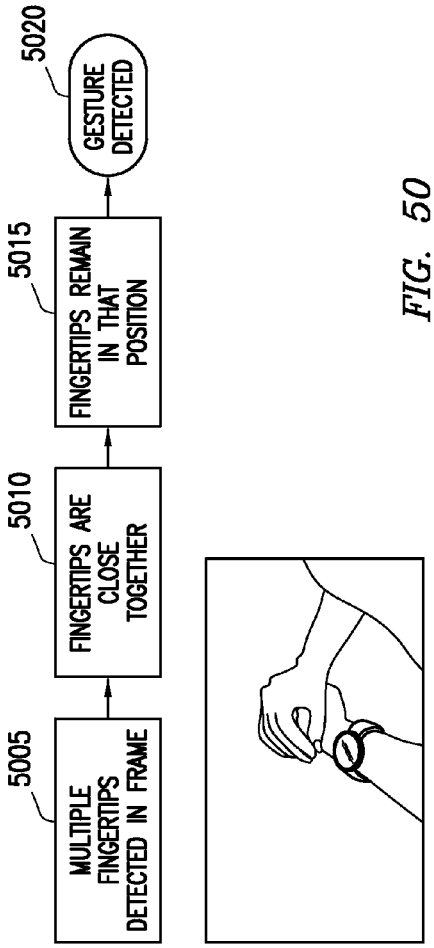
5005
MULTIPLE FINGERTIPS DETECTED IN FRAME
5010
FINGERTIPS ARE CLOSE TOGETHER
5015
FINGERTIPS REMAIN IN THAT POSITION
5020
GESTURE DETECTED

FIG. 50

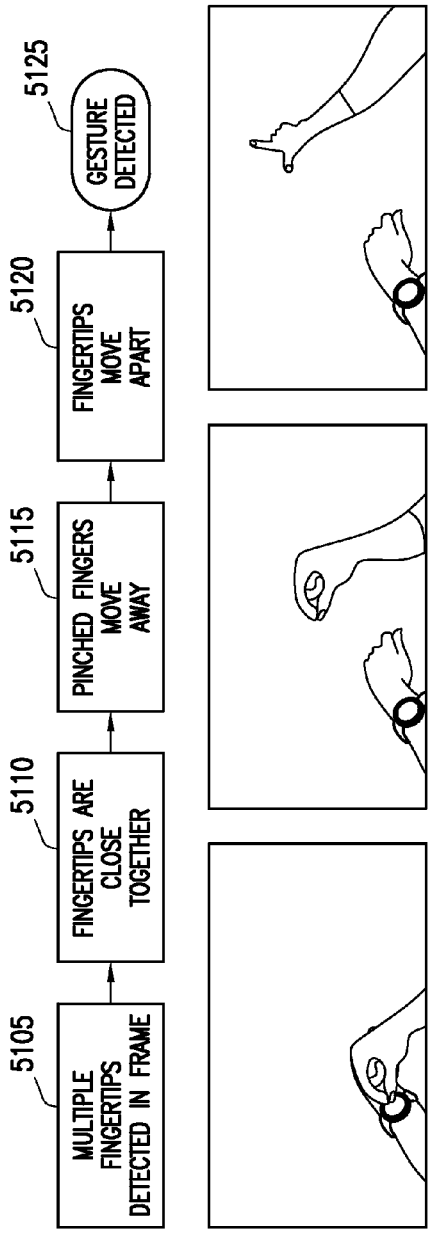
5105
MULTIPLE FINGERTIPS DETECTED IN FRAME
5110
FINGERTIPS ARE CLOSE TOGETHER
5115
PINCHED FINGERS MOVE AWAY
5120
FINGERTIPS MOVE APART
5125
GESTURE DETECTED

FIG. 51

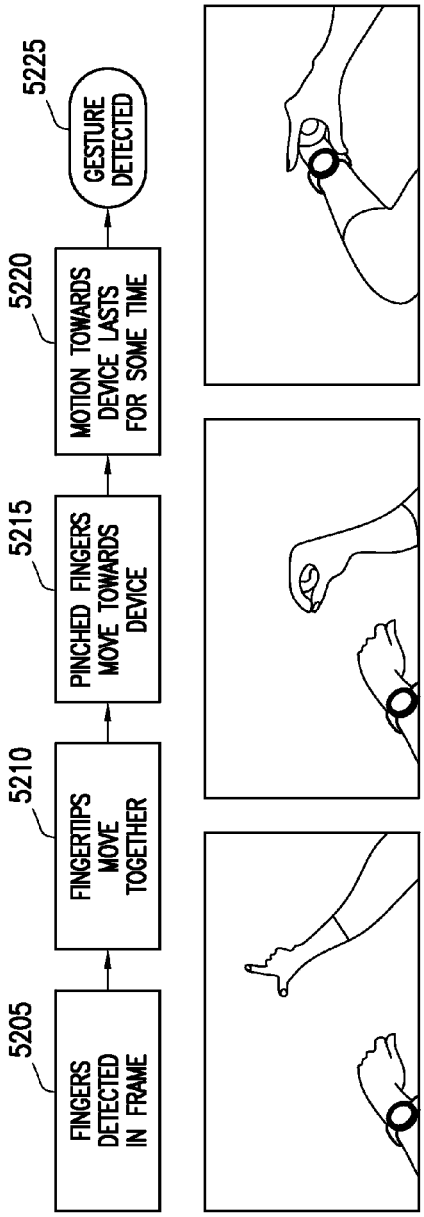
5205
FINGERS DETECTED IN FRAME
5210
FINGERTIPS MOVE TOGETHER
5215
PINCHED FINGERS MOVE TOWARDS DEVICE
5220
MOTION TOWARDS DEVICE LASTS FOR SOME TIME
5225
GESTURE DETECTED

FIG. 52

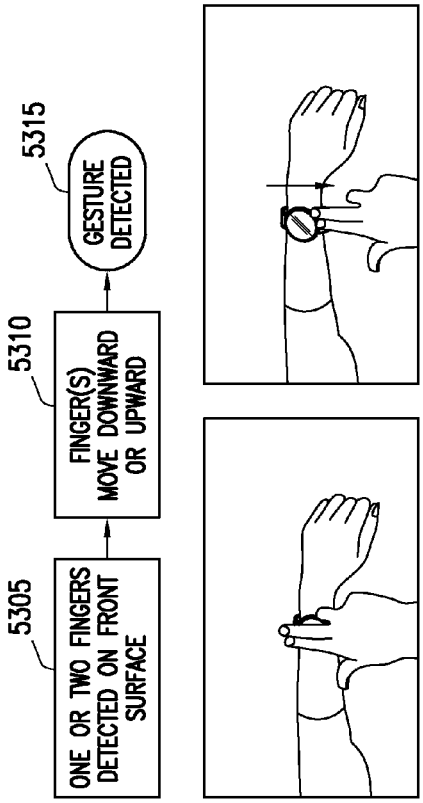
5305
ONE OR TWO FINGERS DETECTED ON FRONT SURFACE
5310
FINGER(S) MOVE DOWNWARD OR UPWARD
5315
GESTURE DETECTED

FIG. 53

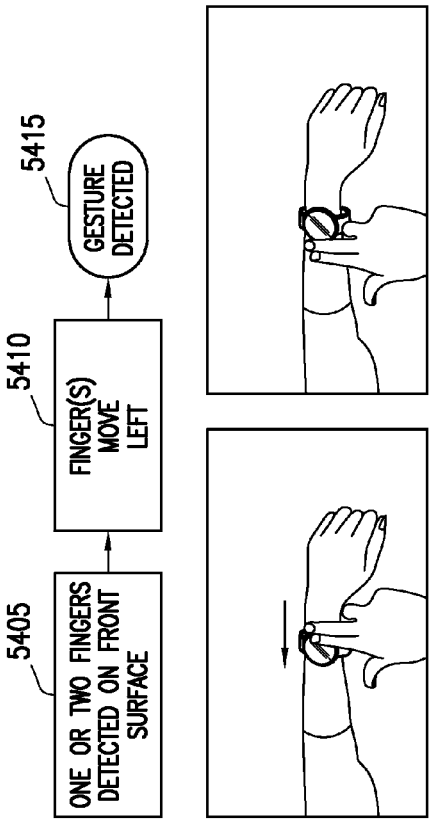
5405
ONE OR TWO FINGERS DETECTED ON FRONT SURFACE
5410
FINGER(S) MOVE LEFT
5415
GESTURE DETECTED

FIG. 54

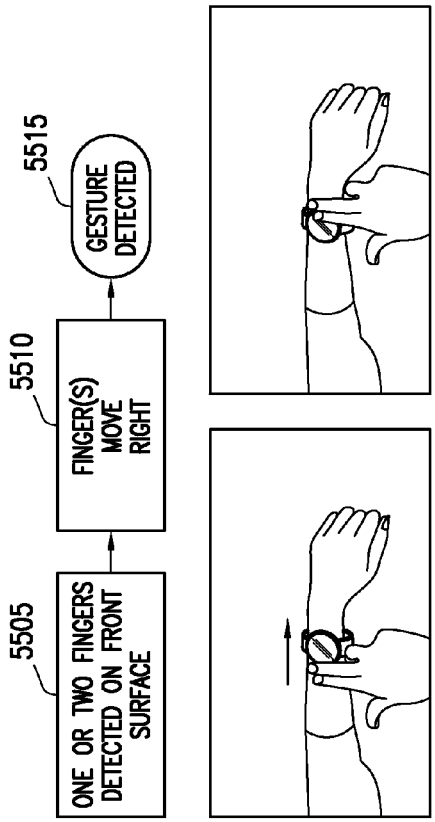
5505
ONE OR TWO FINGERS DETECTED ON FRONT SURFACE
5510
FINGER(S) MOVE RIGHT
5515
GESTURE DETECTED

FIG. 55

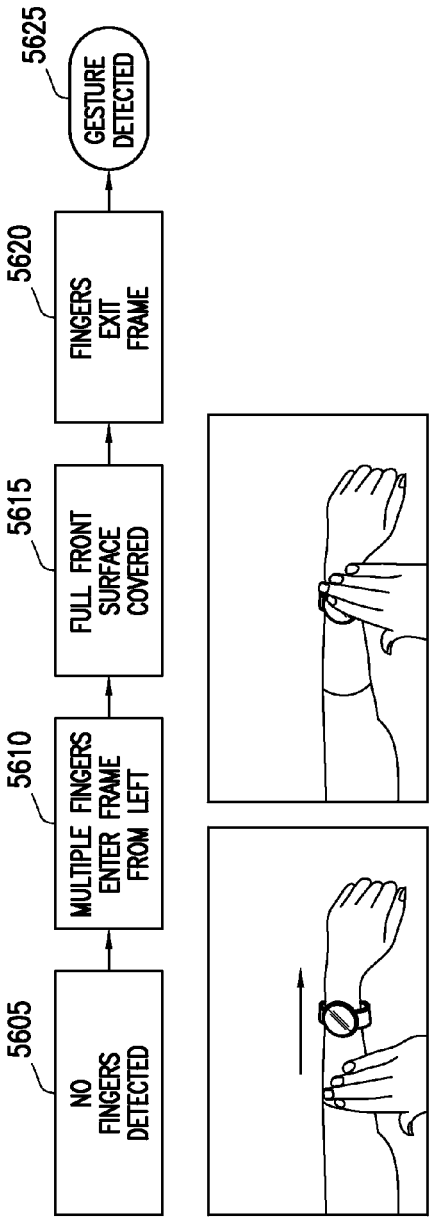
5605
NO FINGERS DETECTED
5610
MULTIPLE FINGERS ENTER FRAME FROM LEFT
5615
FULL FRONT SURFACE COVERED
5620
FINGERS EXIT FRAME
5625
GESTURE DETECTED

FIG. 56

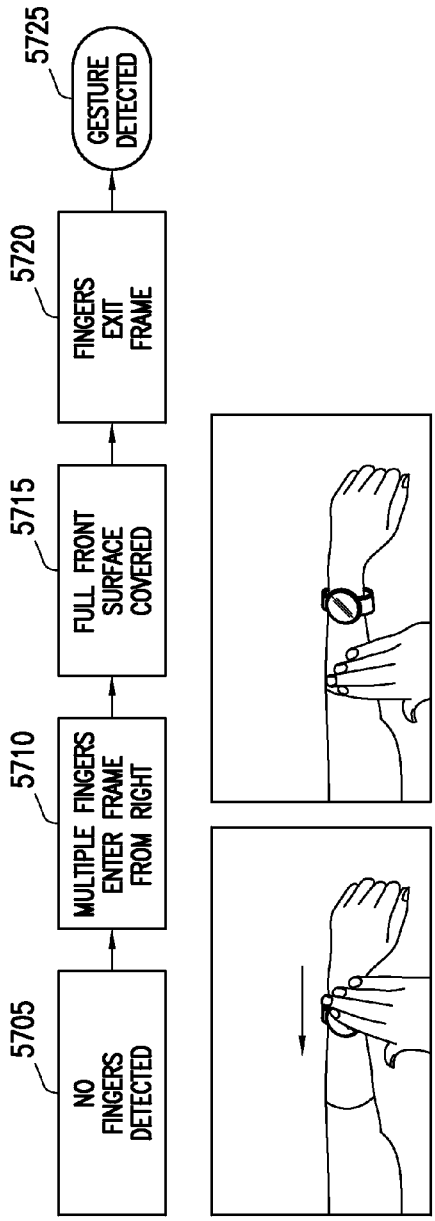
5705
NO FINGERS DETECTED
5710
MULTIPLE FINGERS ENTER FRAME FROM RIGHT
5715
FULL FRONT SURFACE COVERED
5720
FINGERS EXIT FRAME
5725
GESTURE DETECTED

FIG. 57

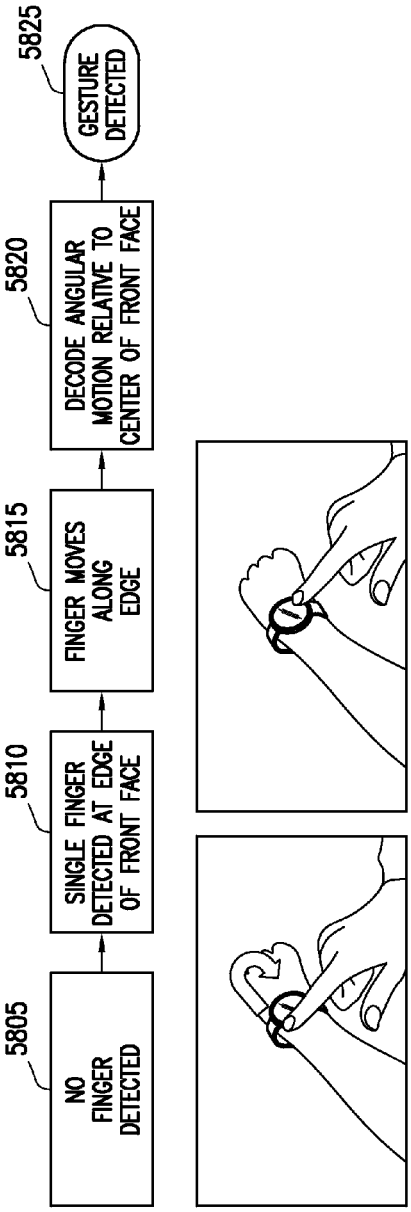
5805
NO FINGER DETECTED
5810
SINGLE FINGER DETECTED AT EDGE OF FRONT FACE
5815
FINGER MOVES ALONG EDGE
5820
DECODE ANGULAR MOTION RELATIVE TO CENTER OF FRONT FACE
5825
GESTURE DETECTED

FIG. 58

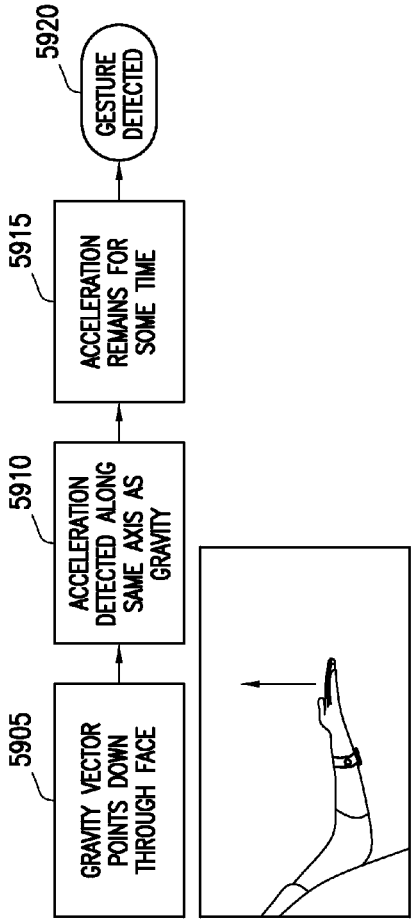
5905
GRAVITY VECTOR POINTS DOWN THROUGH FACE
5910
ACCELERATION DETECTED ALONG SAME AXIS AS GRAVITY
5915
ACCELERATION REMAINS FOR SOME TIME
5920
GESTURE DETECTED

FIG. 59

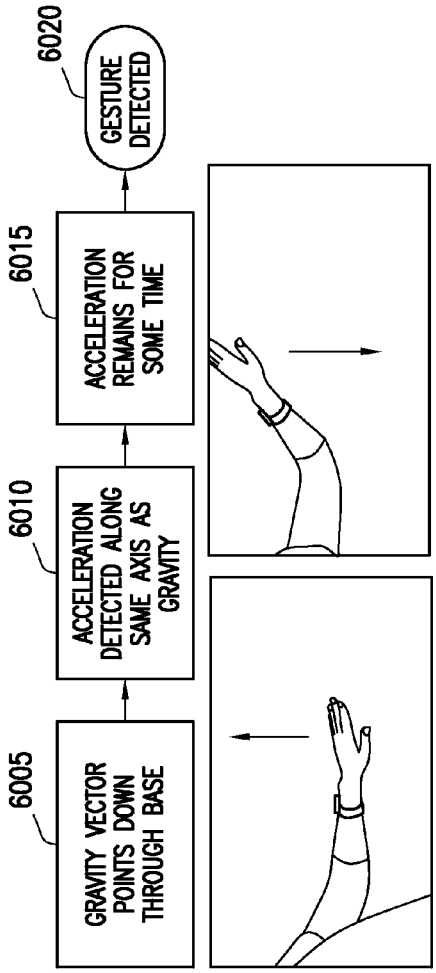
6005
GRAVITY VECTOR POINTS DOWN THROUGH BASE
6010
ACCELERATION DETECTED ALONG SAME AXIS AS GRAVITY
6015
ACCELERATION REMAINS FOR SOME TIME
6020
GESTURE DETECTED

FIG. 60

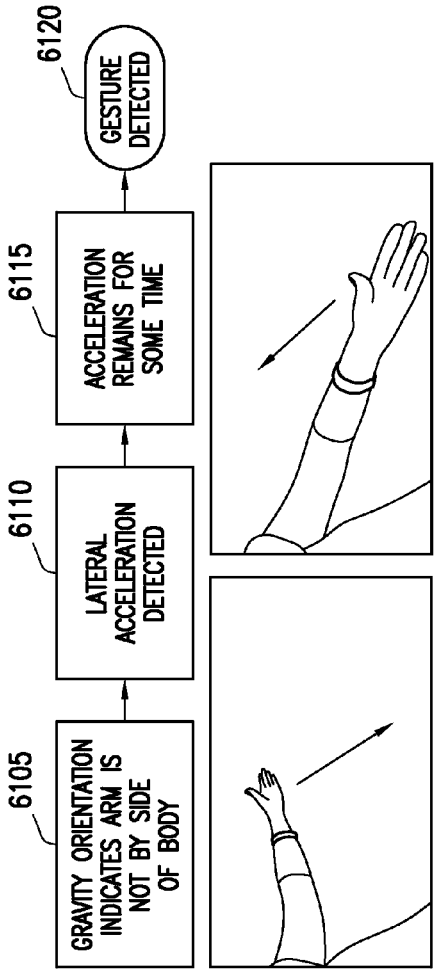
6105
GRAVITY ORIENTATION INDICATES ARM IS NOT BY SIDE OF BODY
6110
LATERAL ACCELERATION DETECTED
6115
ACCELERATION REMAINS FOR SOME TIME
6120
GESTURE DETECTED

FIG. 61

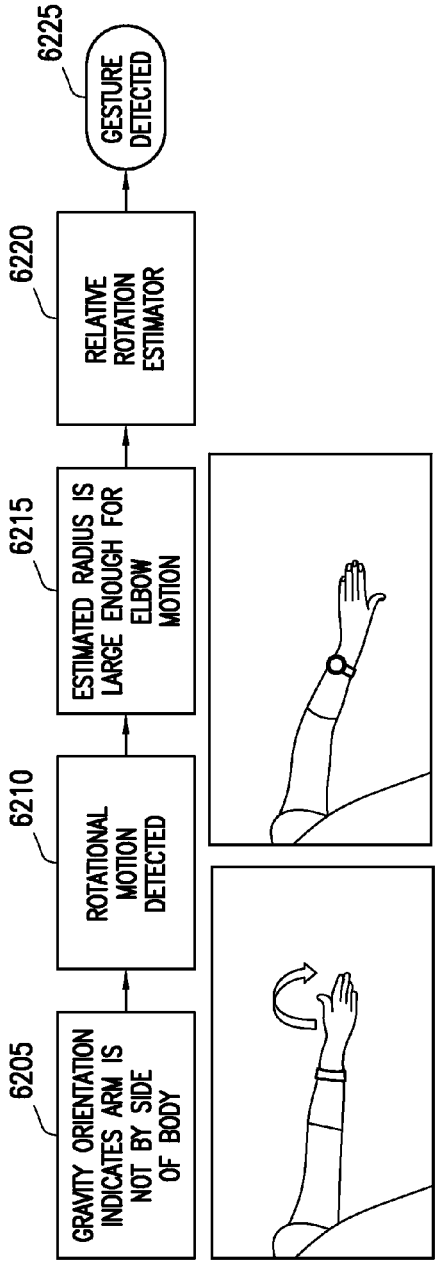
6205
GRAVITY ORIENTATION INDICATES ARM IS NOT BY SIDE OF BODY
6210
ROTATIONAL MOTION DETECTED
6215
ESTIMATED RADIUS IS LARGE ENOUGH FOR ELBOW MOTION
6220
RELATIVE ROTATION ESTIMATOR
6225
GESTURE DETECTED

FIG. 62

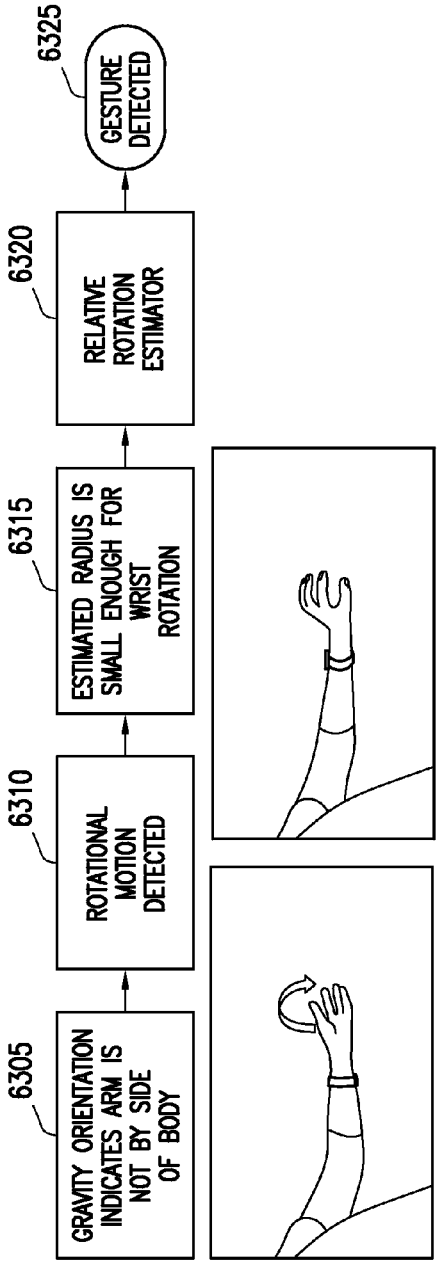
6305
GRAVITY ORIENTATION INDICATES ARM IS NOT BY SIDE OF BODY
6310
ROTATIONAL MOTION DETECTED
6315
ESTIMATED RADIUS IS SMALL ENOUGH FOR WRIST ROTATION
6320
RELATIVE ROTATION ESTIMATOR
6325
GESTURE DETECTED

FIG. 63

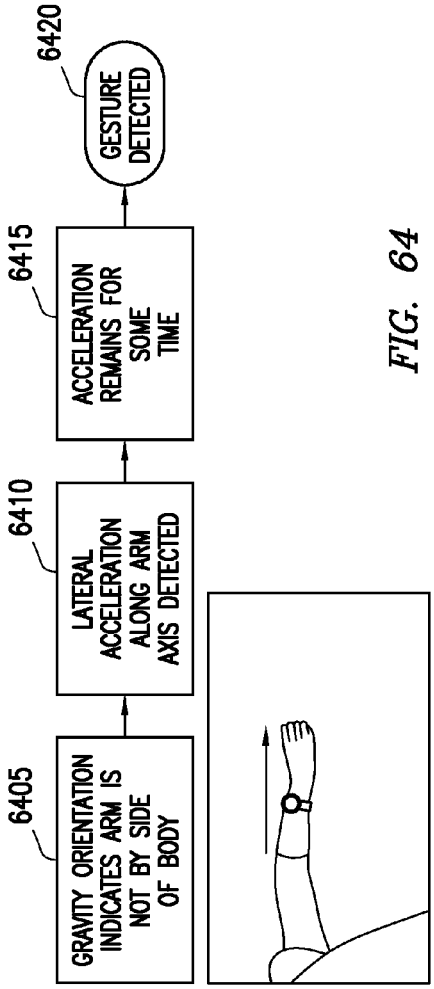
6405
GRAVITY ORIENTATION INDICATES ARM IS NOT BY SIDE OF BODY
6410
LATERAL ACCELERATION ALONG ARM AXIS DETECTED
6415
ACCELERATION REMAINS FOR SOME TIME
6420
GESTURE DETECTED

FIG. 64

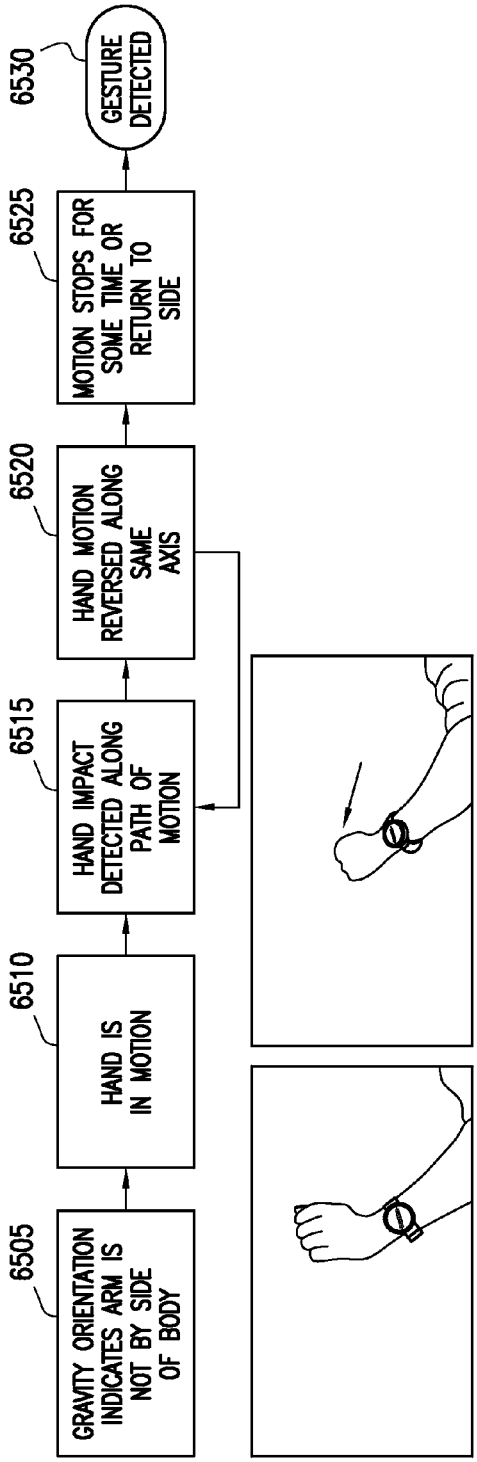
6505
GRAVITY ORIENTATION INDICATES ARM IS NOT BY SIDE OF BODY
6510
HAND IS IN MOTION
6515
HAND IMPACT DETECTED ALONG PATH OF MOTION
6520
HAND MOTION REVERSED ALONG SAME AXIS
6525
MOTION STOPS FOR SOME TIME OR RETURN TO SIDE
6530
GESTURE DETECTED

FIG. 65

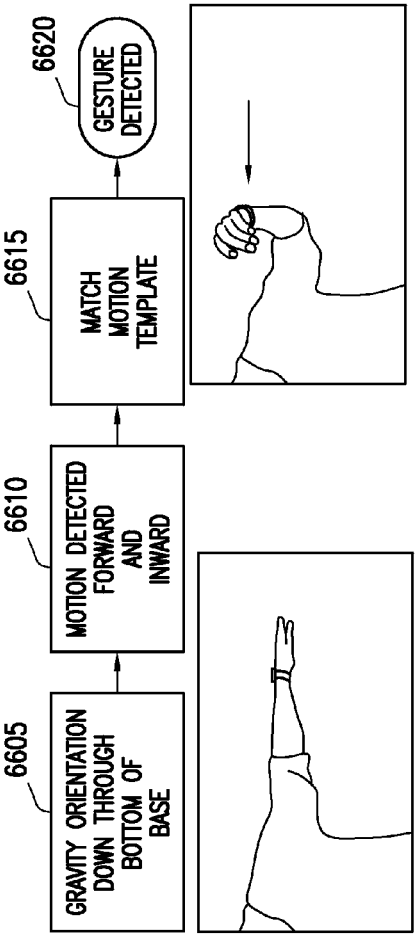
6605
GRAVITY ORIENTATION DOWN THROUGH BOTTOM OF BASE
6610
MOTION DETECTED FORWARD AND INWARD
6615
MATCH MOTION TEMPLATE
6620
GESTURE DETECTED

FIG. 66

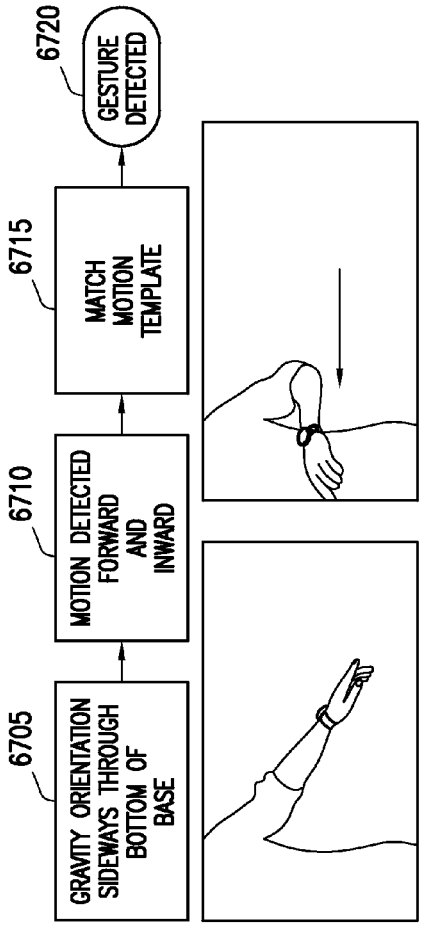
6705
GRAVITY ORIENTATION SIDEWAYS THROUGH BOTTOM OF BASE
6710
MOTION DETECTED FORWARD AND INWARD
6715
MATCH MOTION TEMPLATE
6720
GESTURE DETECTED

FIG. 67

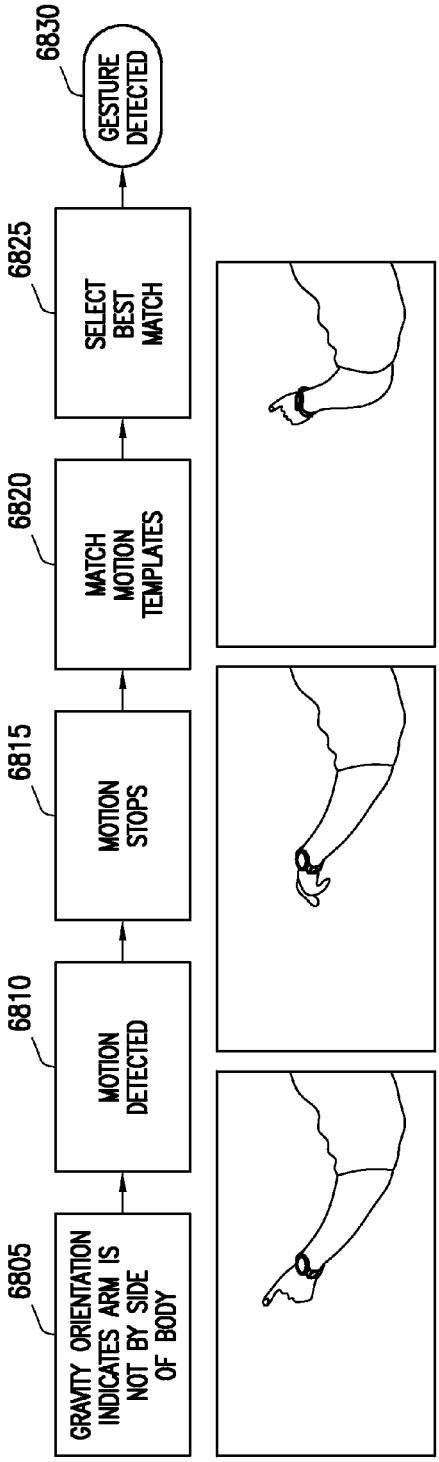
6805
GRAVITY ORIENTATION INDICATES ARM IS NOT BY SIDE OF BODY
6810
MOTION DETECTED
6815
MOTION STOPS
6820
MATCH MOTION TEMPLATES
6825
SELECT BEST MATCH
6830
GESTURE DETECTED

FIG. 68

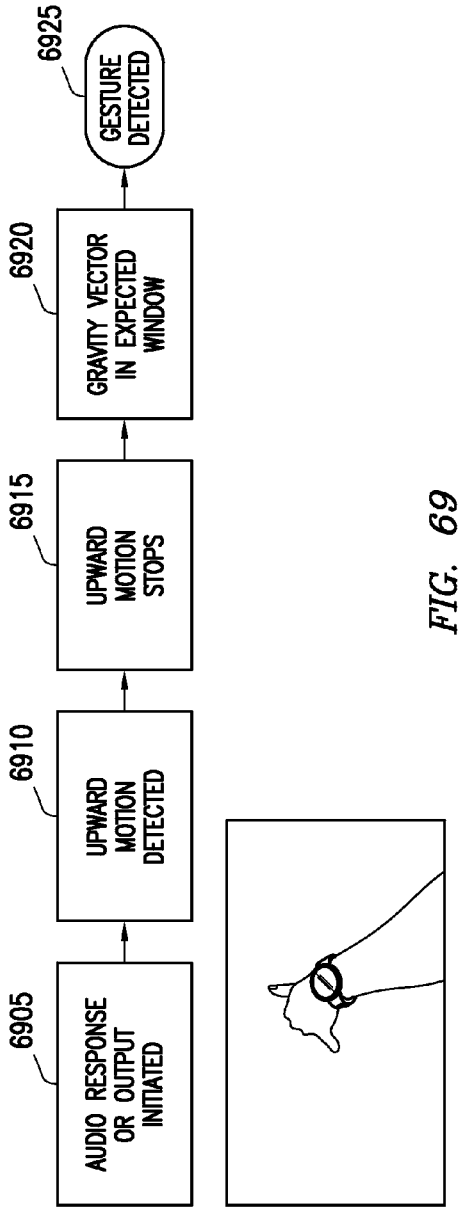
6905
AUDIO RESPONSE OR OUTPUT INITIATED
6910
UPWARD MOTION DETECTED
6915
UPWARD MOTION STOPS
6920
GRAVITY VECTOR IN EXPECTED WINDOW
6925
GESTURE DETECTED

FIG. 69

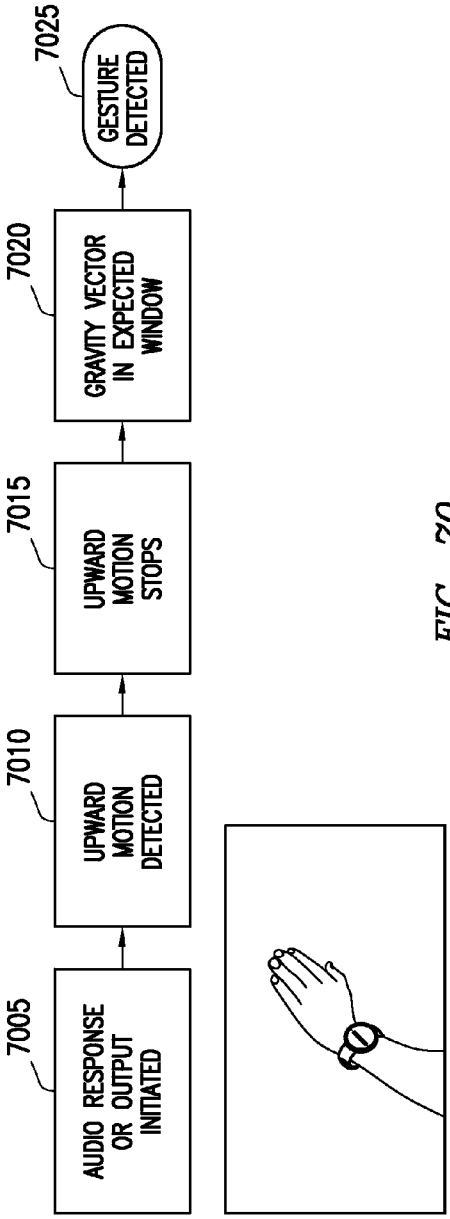
7005
AUDIO RESPONSE OR OUTPUT INITIATED
7010
UPWARD MOTION DETECTED
7015
UPWARD MOTION STOPS
7020
GRAVITY VECTOR IN EXPECTED WINDOW
7025
GESTURE DETECTED

FIG. 70

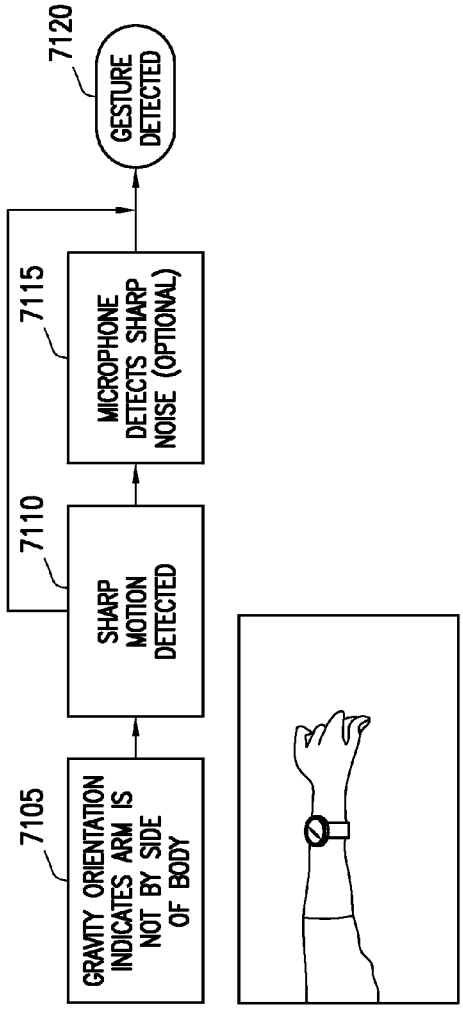
7105
GRAVITY ORIENTATION INDICATES ARM IS NOT BY SIDE OF BODY
7110
SHARP MOTION DETECTED
7115
MICROPHONE DETECTS SHARP NOISE (OPTIONAL)
7120
GESTURE DETECTED

FIG. 71

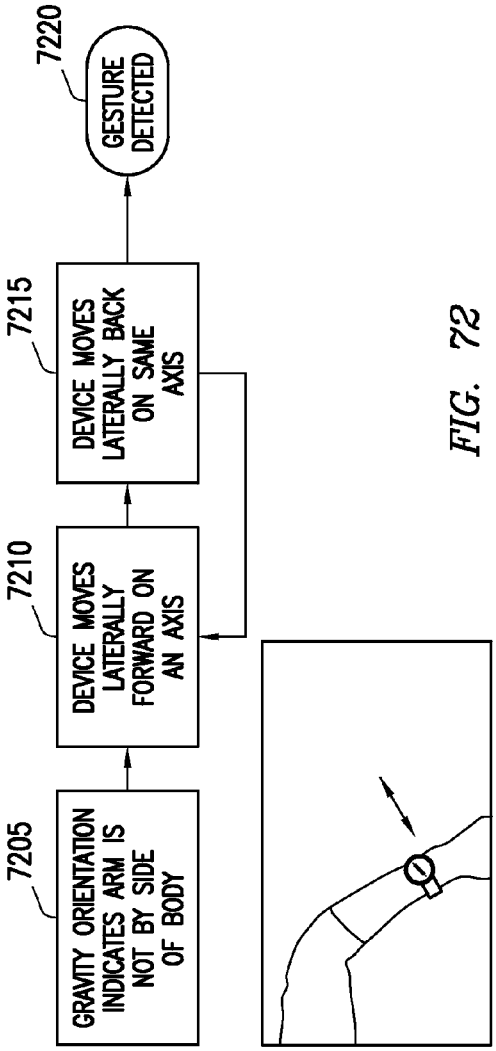
7205
GRAVITY ORIENTATION INDICATES ARM IS NOT BY SIDE OF BODY
7210
DEVICE MOVES LATERALLY FORWARD ON AN AXIS
7215
DEVICE MOVES LATERALLY BACK ON SAME AXIS
7220
GESTURE DETECTED

FIG. 72

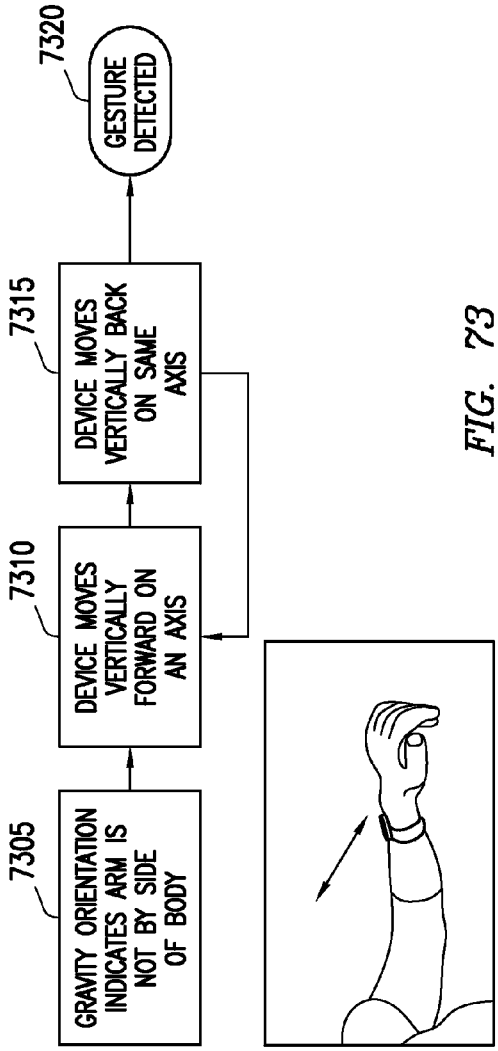
7305
GRAVITY ORIENTATION INDICATES ARM IS NOT BY SIDE OF BODY
7310
DEVICE MOVES VERTICALLY FORWARD ON AN AXIS
7315
DEVICE MOVES VERTICALLY BACK ON SAME AXIS
7320
GESTURE DETECTED

FIG. 73

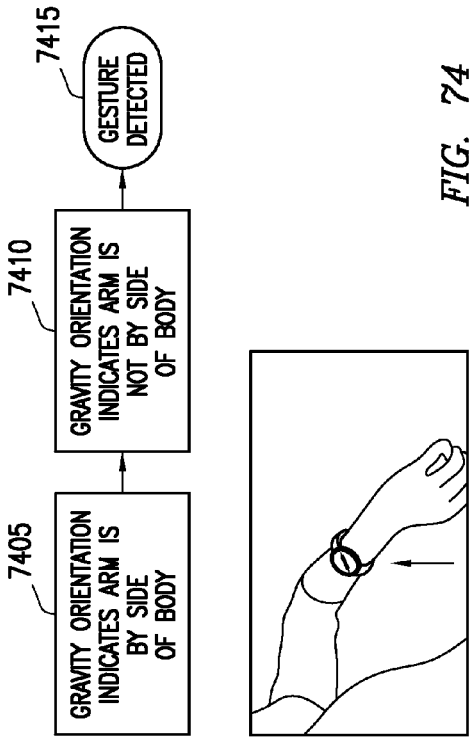
7405
GRAVITY ORIENTATION INDICATES ARM IS BY SIDE OF BODY
7410
GRAVITY ORIENTATION INDICATES ARM IS NOT BY SIDE OF BODY
7415
GESTURE DETECTED

FIG. 74

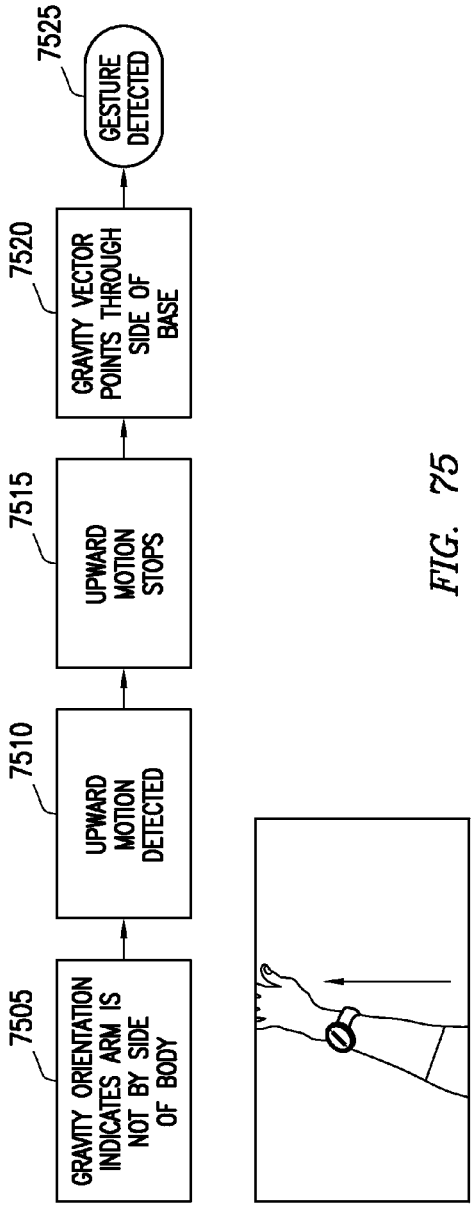
7505
GRAVITY ORIENTATION INDICATES ARM IS NOT BY SIDE OF BODY
7510
UPWARD MOTION DETECTED
7515
UPWARD MOTION STOPS
7520
GRAVITY VECTOR POINTS THROUGH SIDE OF BASE
7525
GESTURE DETECTED

FIG. 75

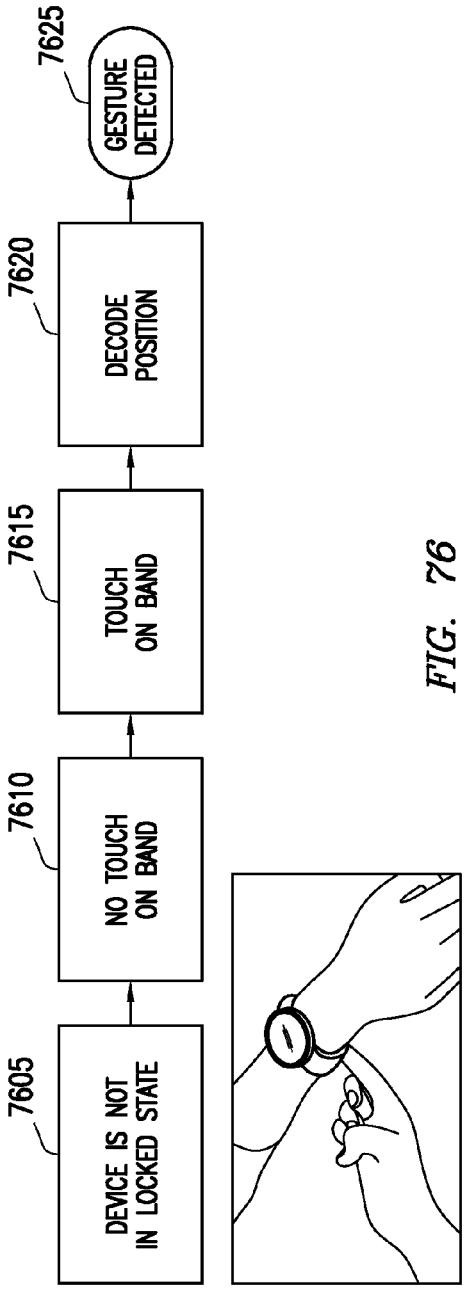
7605
DEVICE IS NOT IN LOCKED STATE
7610
NO TOUCH ON BAND
7615
TOUCH ON BAND
7620
DECODE POSITION
7625
GESTURE DETECTED

FIG. 76

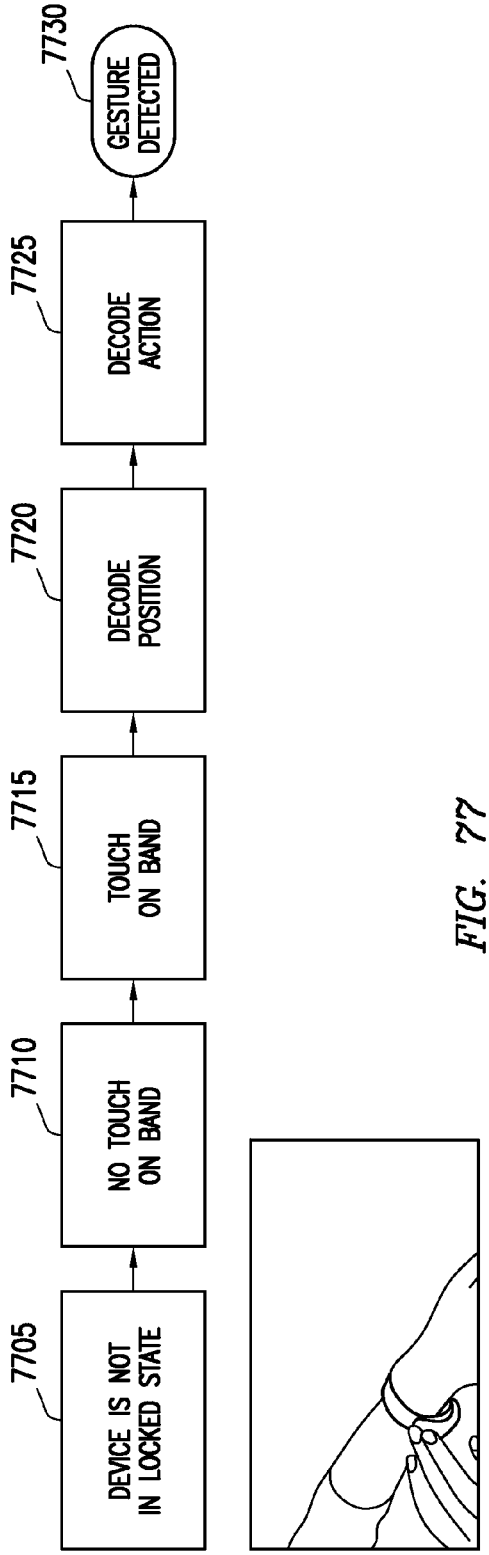
7705
DEVICE IS NOT IN LOCKED STATE
7710
NO TOUCH ON BAND
7715
TOUCH ON BAND
7720
DECODE POSITION
7725
DECODE ACTION
7730
GESTURE DETECTED

FIG. 77

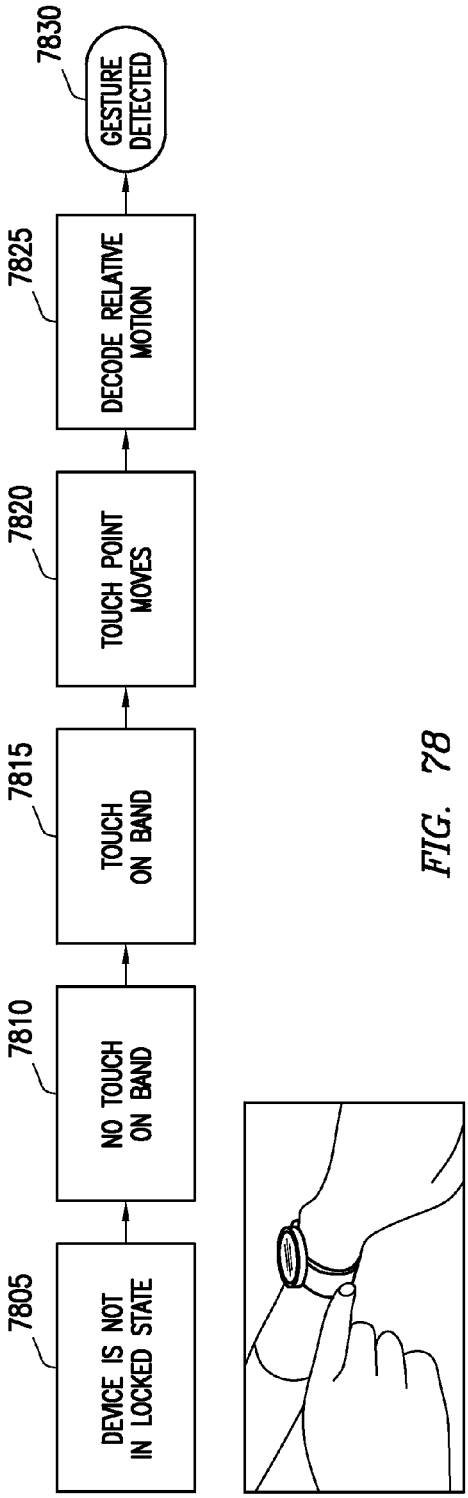
7805
DEVICE IS NOT IN LOCKED STATE
7810
NO TOUCH ON BAND
7815
TOUCH ON BAND
7820
TOUCH POINT MOVES
7825
DECODE RELATIVE MOTION
7830
GESTURE DETECTED

FIG. 78

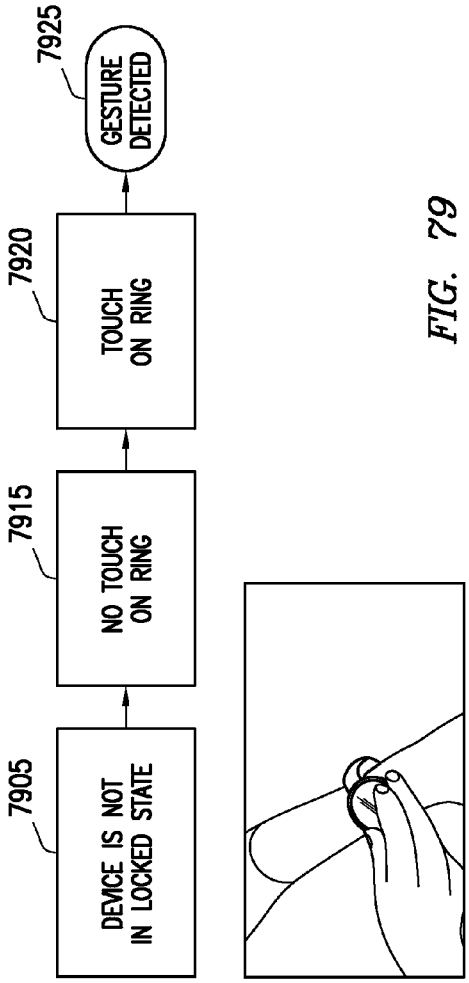
7905
DEVICE IS NOT IN LOCKED STATE
7915
NO TOUCH ON RING
7920
TOUCH ON RING
7925
GESTURE DETECTED

FIG. 79

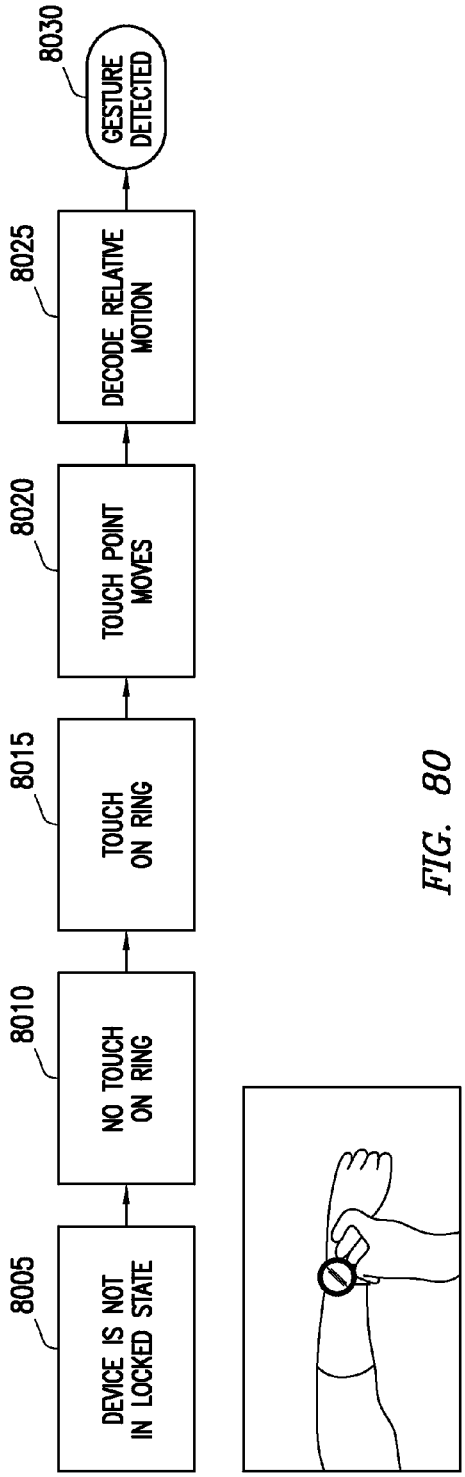
8005
DEVICE IS NOT IN LOCKED STATE
8010
NO TOUCH ON RING
8015
TOUCH ON RING
8020
TOUCH POINT MOVES
8025
DECODE RELATIVE MOTION
8030
GESTURE DETECTED

FIG. 80

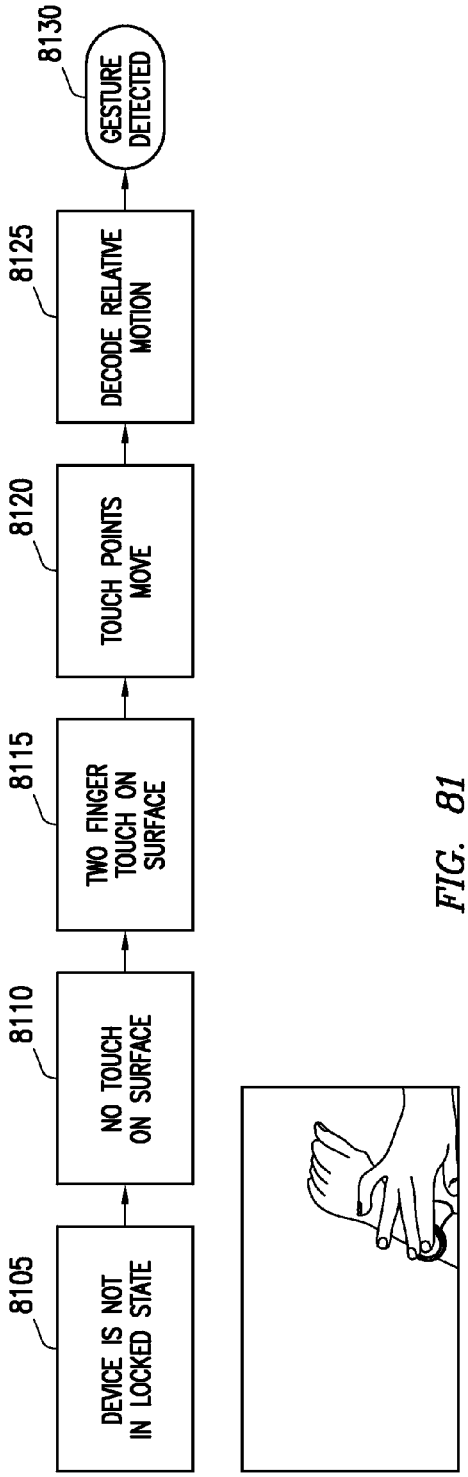
8105
DEVICE IS NOT IN LOCKED STATE
8110
NO TOUCH ON SURFACE
8115
TWO FINGER TOUCH ON SURFACE
8120
TOUCH POINTS MOVE
8125
DECODE RELATIVE MOTION
8130
GESTURE DETECTED

FIG. 81

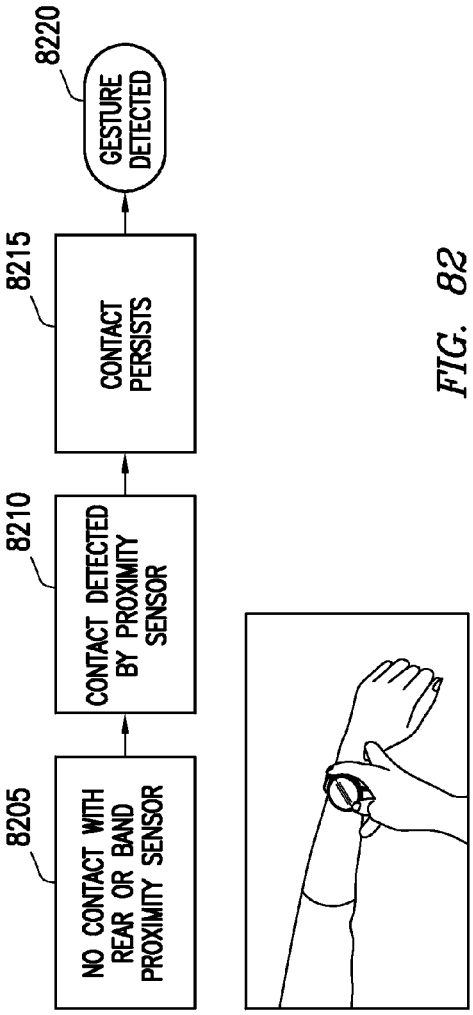
8205
NO CONTACT WITH REAR OR BAND PROXIMITY SENSOR
8210
CONTACT DETECTED BY PROXIMITY SENSOR
8215
CONTACT PERSISTS
8220
GESTURE DETECTED

FIG. 82

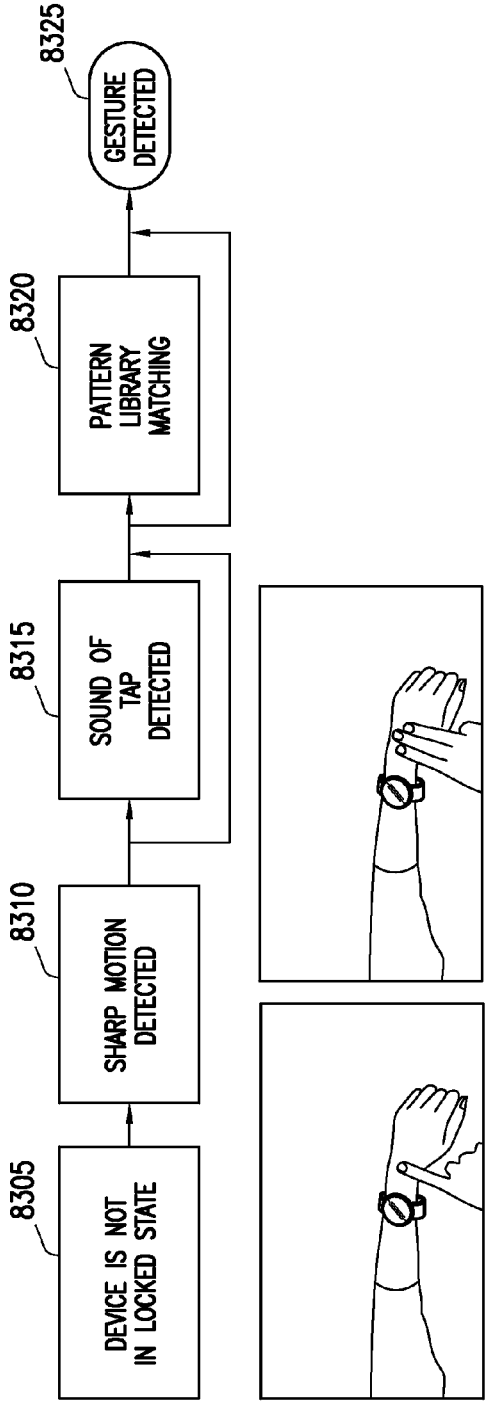
8305
DEVICE IS NOT IN LOCKED STATE
8310
SHARP MOTION DETECTED
8315
SOUND OF TAP DETECTED
8320
PATTERN LIBRARY MATCHING
8325
GESTURE DETECTED

FIG. 83

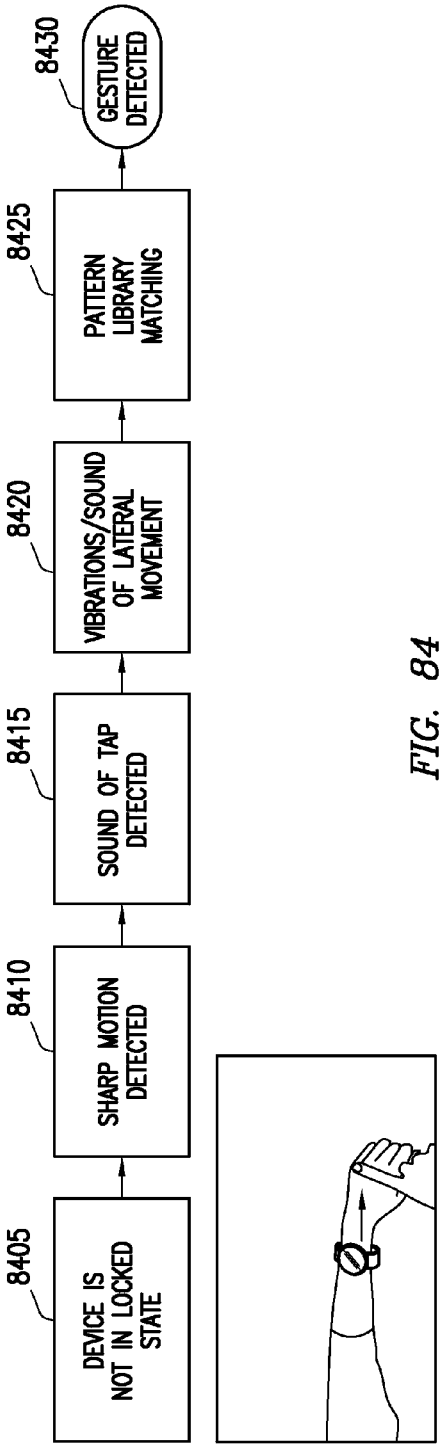
8405
DEVICE IS NOT IN LOCKED STATE
8410
SHARP MOTION DETECTED
8415
SOUND OF TAP DETECTED
8420
VIBRATIONS/SOUND OF LATERAL MOVEMENT
8425
PATTERN LIBRARY MATCHING
8430
GESTURE DETECTED

FIG. 84

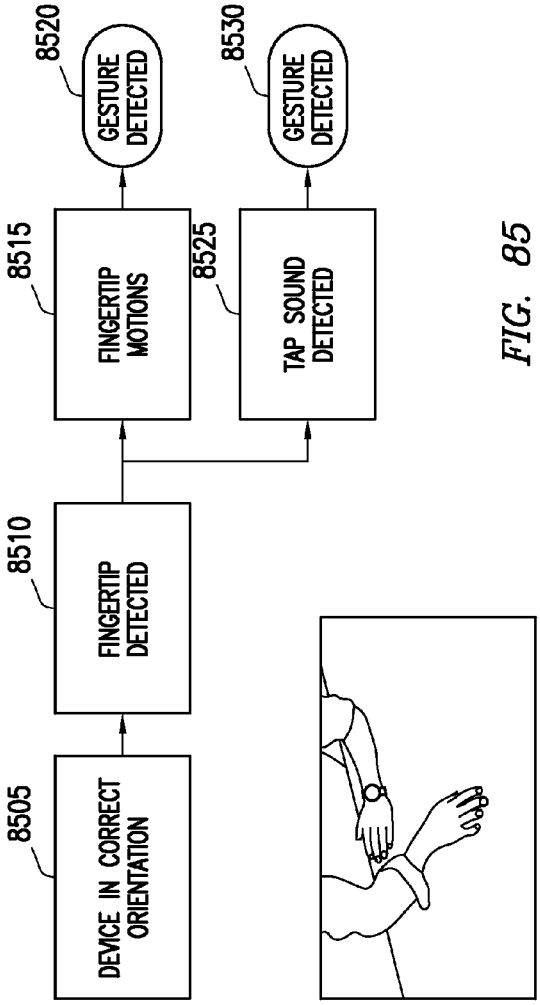
8505
DEVICE IN CORRECT ORIENTATION
8510
FINGERTIP DETECTED
8515
FINGERTIP MOTIONS
8520
GESTURE DETECTED
8525
TAP SOUND DETECTED
8530
GESTURE DETECTED

FIG. 85

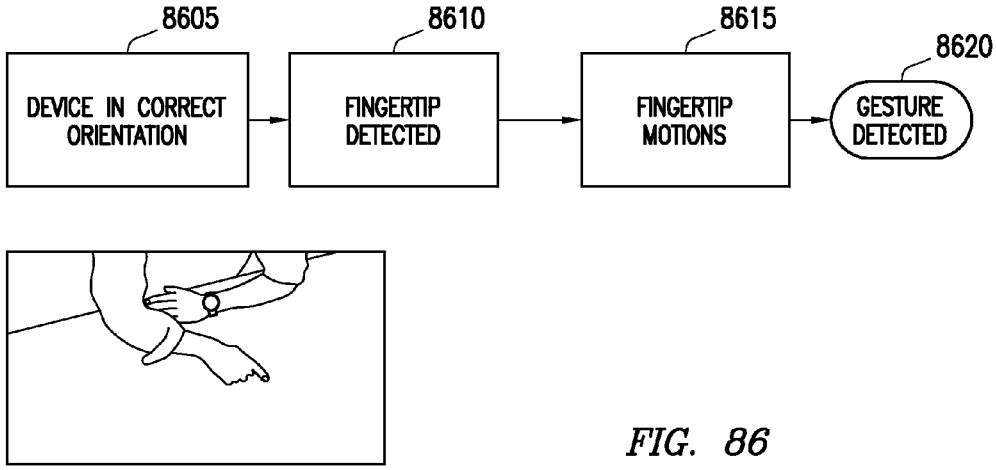
8605
DEVICE IN CORRECT ORIENTATION
8610
FINGERTIP DETECTED
8615
FINGERTIP MOTIONS
8620
GESTURE DETECTED

FIG. 86

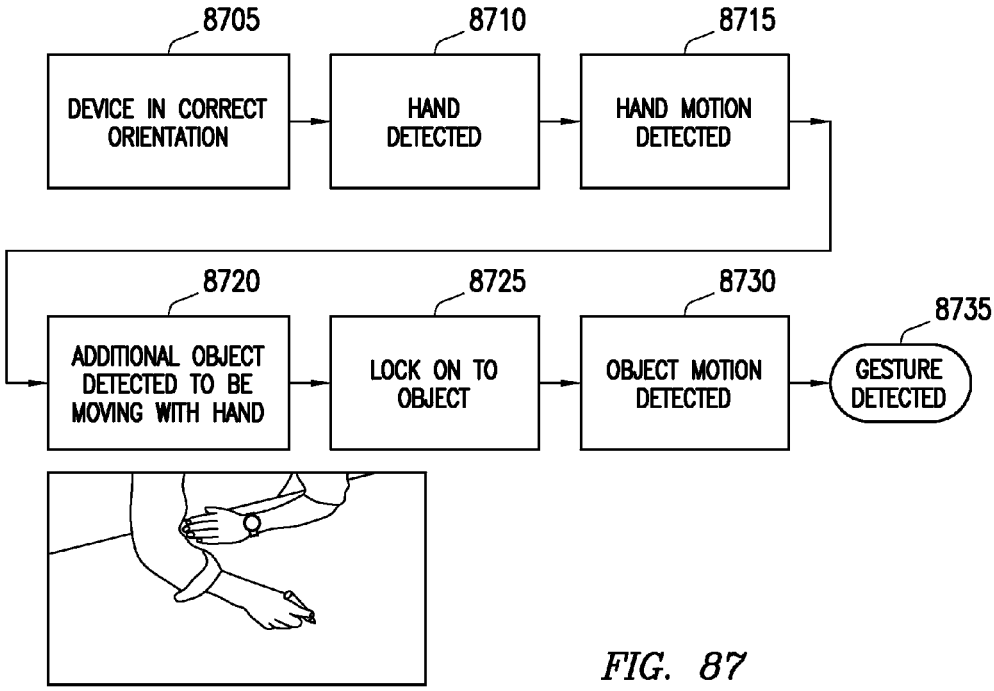
8705
DEVICE IN CORRECT ORIENTATION
8710
HAND DETECTED
8715
HAND MOTION DETECTED
8720
ADDITIONAL OBJECT DETECTED TO BE MOVING WITH HAND
8725
LOCK ON TO OBJECT
8730
OBJECT MOTION DETECTED
8735
GESTURE DETECTED

FIG. 87

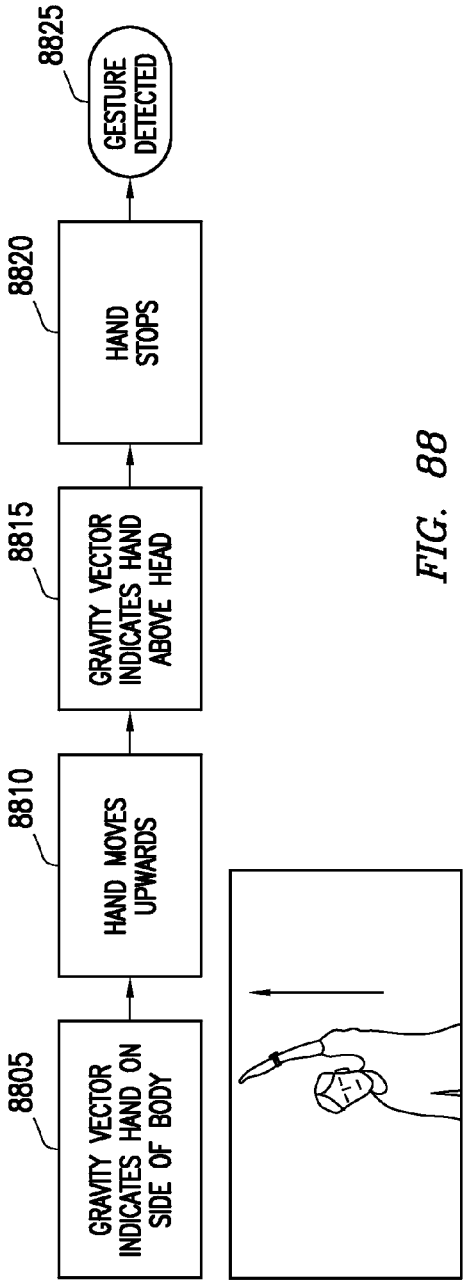
8805
GRAVITY VECTOR INDICATES HAND ON SIDE OF BODY
8810
HAND MOVES UPWARDS
8815
GRAVITY VECTOR INDICATES HAND ABOVE HEAD
8820
HAND STOPS
8825
GESTURE DETECTED

FIG. 88

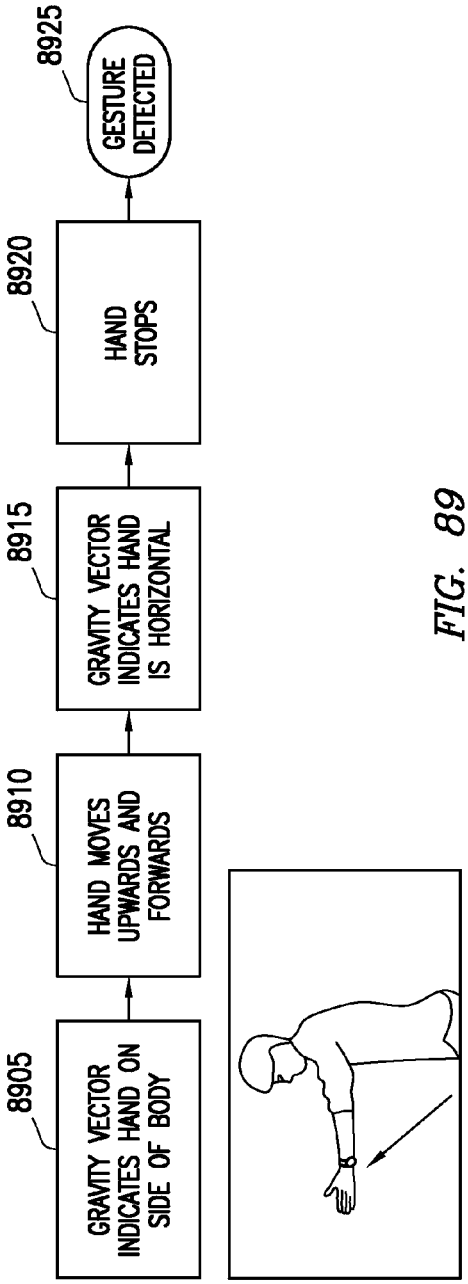
8905
GRAVITY VECTOR INDICATES HAND ON SIDE OF BODY
8910
HAND MOVES UPWARDS AND FORWARDS
8915
GRAVITY VECTOR INDICATES HAND IS HORIZONTAL
8920
HAND STOPS
8925
GESTURE DETECTED

FIG. 89

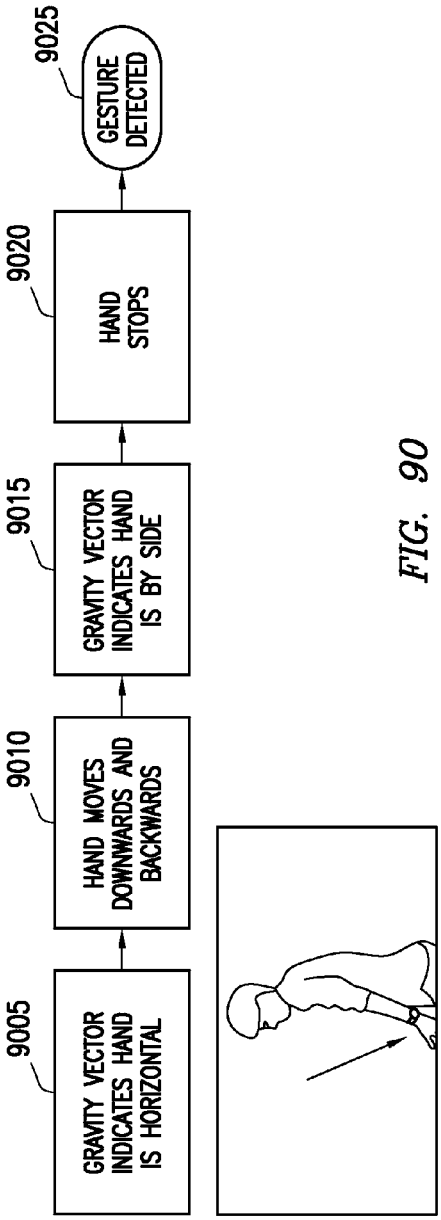
9005
GRAVITY VECTOR INDICATES HAND IS HORIZONTAL
9010
HAND MOVES DOWNWARDS AND BACKWARDS
9015
GRAVITY VECTOR INDICATES HAND IS BY SIDE
9020
HAND STOPS
9025
GESTURE DETECTED

FIG. 90

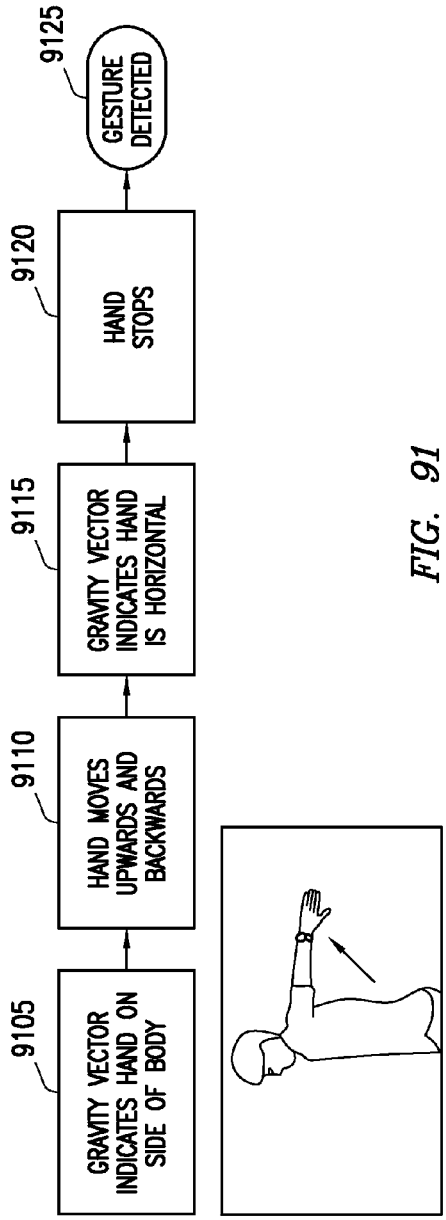
9105
GRAVITY VECTOR INDICATES HAND ON SIDE OF BODY
9110
HAND MOVES UPWARDS AND BACKWARDS
9115
GRAVITY VECTOR INDICATES HAND IS HORIZONTAL
9120
HAND STOPS
9125
GESTURE DETECTED

FIG. 91

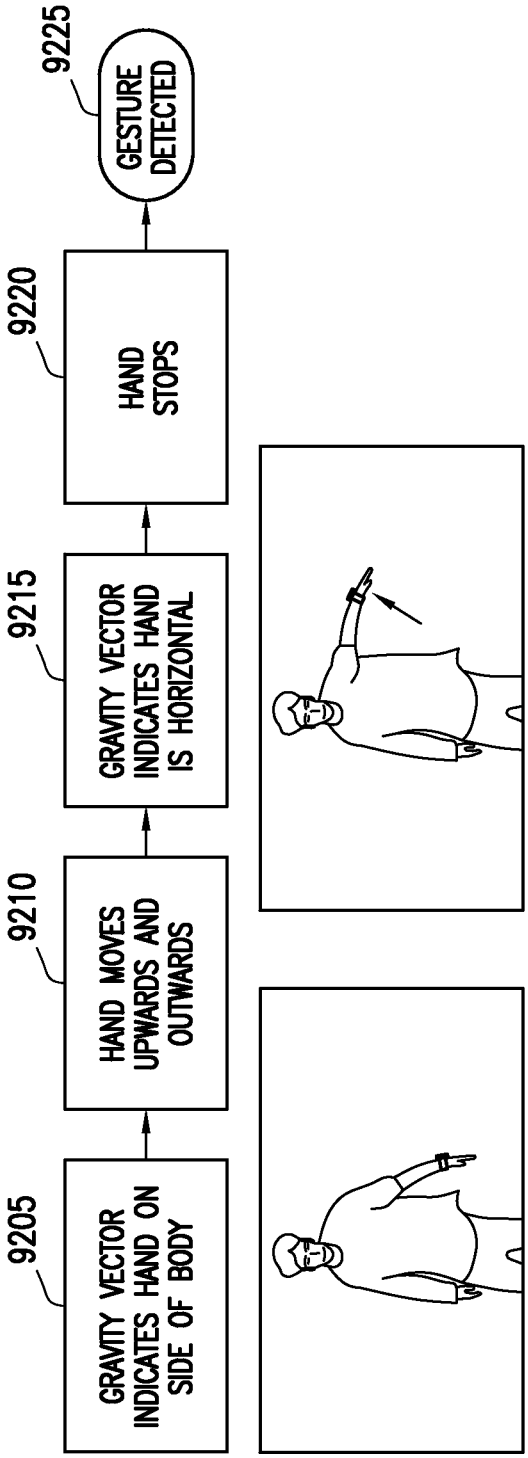
9205
GRAVITY VECTOR INDICATES HAND ON SIDE OF BODY
9210
HAND MOVES UPWARDS AND OUTWARDS
9215
GRAVITY VECTOR INDICATES HAND IS HORIZONTAL
9220
HAND STOPS
9225
GESTURE DETECTED

FIG. 92

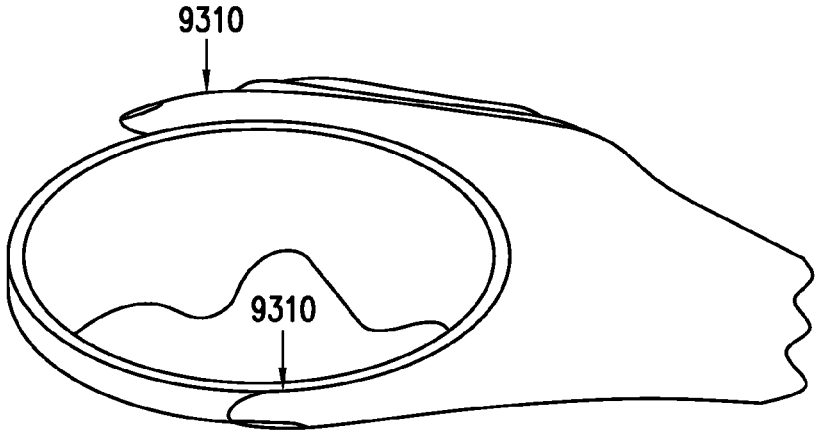

FIG. 93A

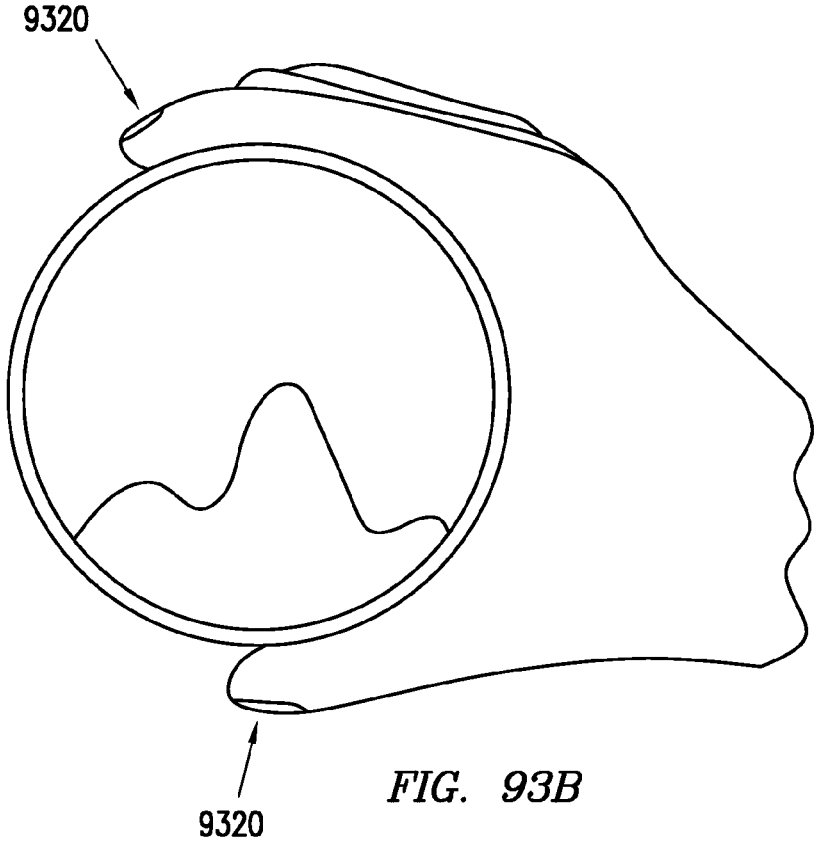

FIG. 93B

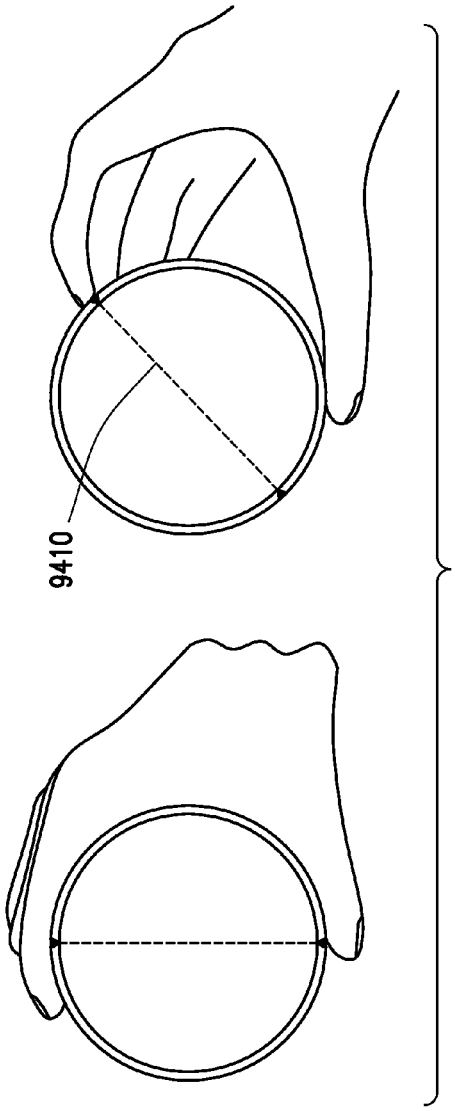

FIG. 94A

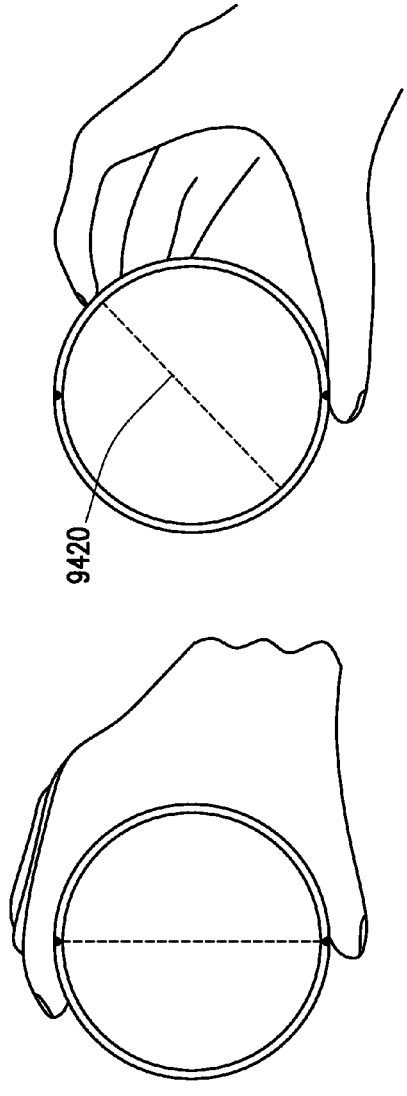

FIG. 94B

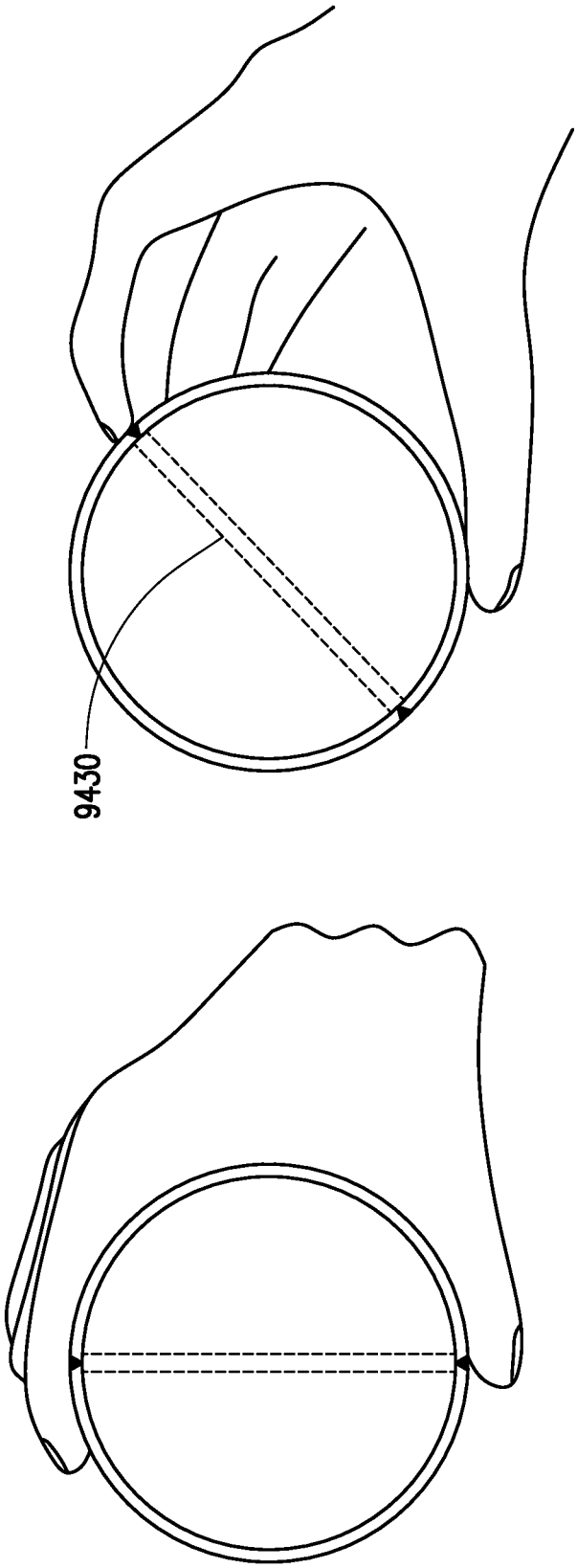

FIG. 94C

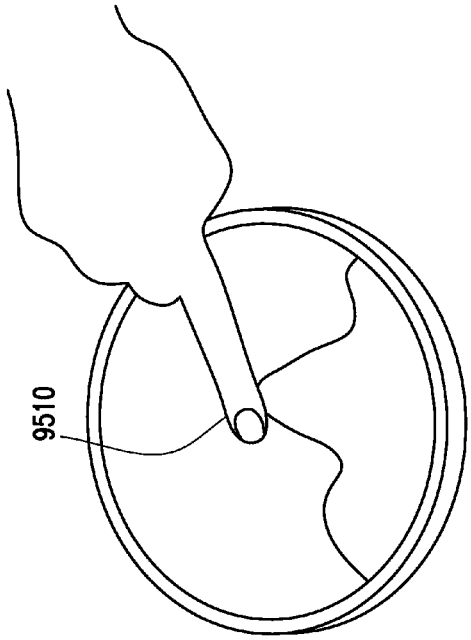

FIG. 95A

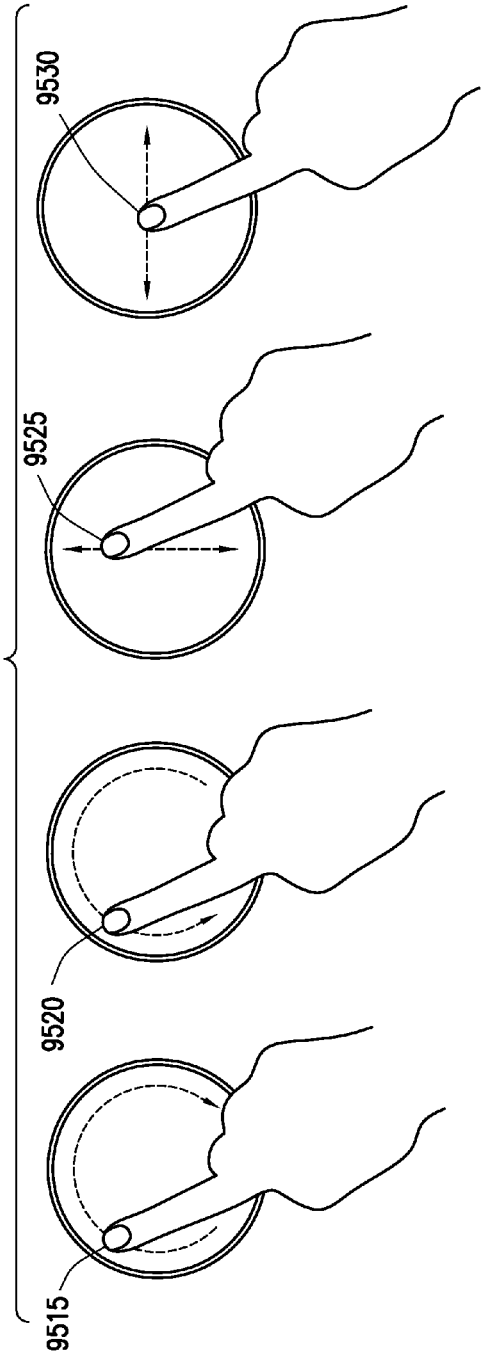

FIG. 95B

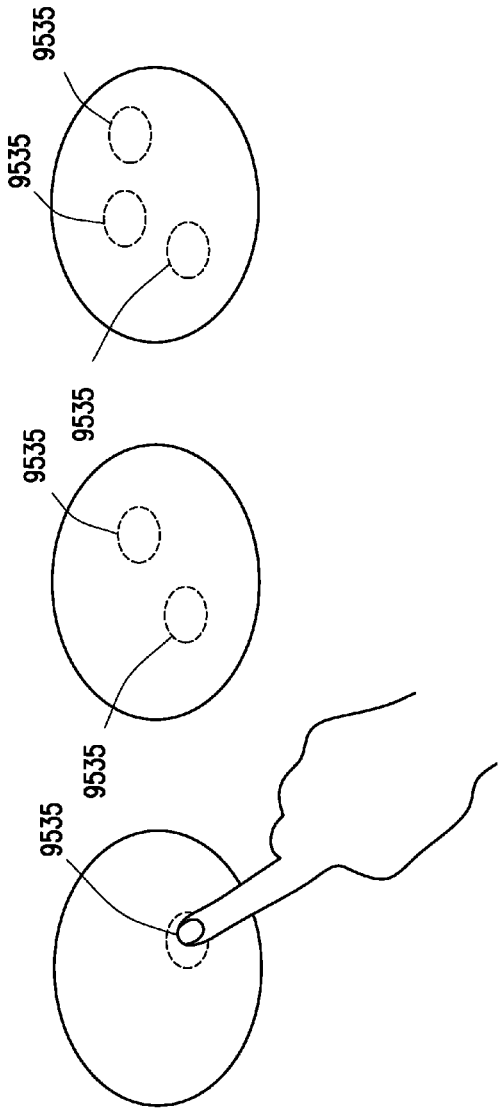

FIG. 95C

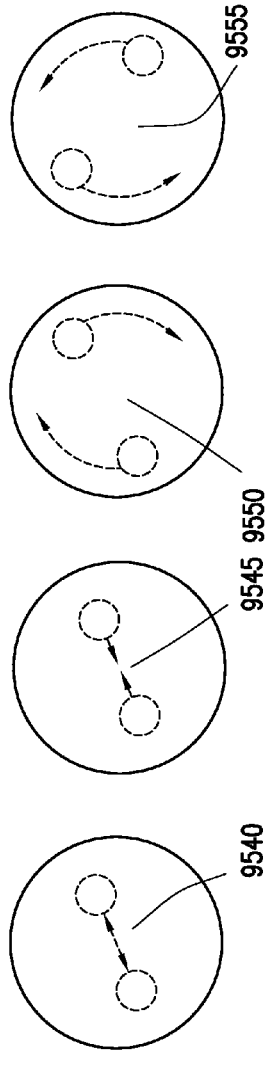

FIG. 95D

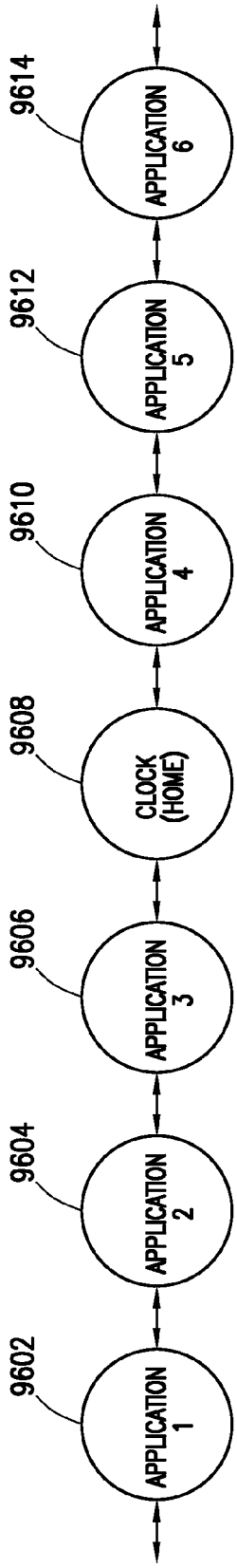

FIG. 96A

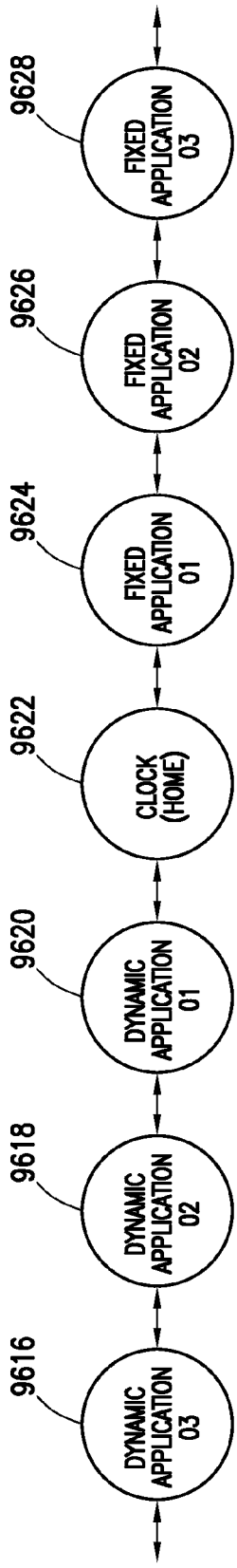

FIG. 96B

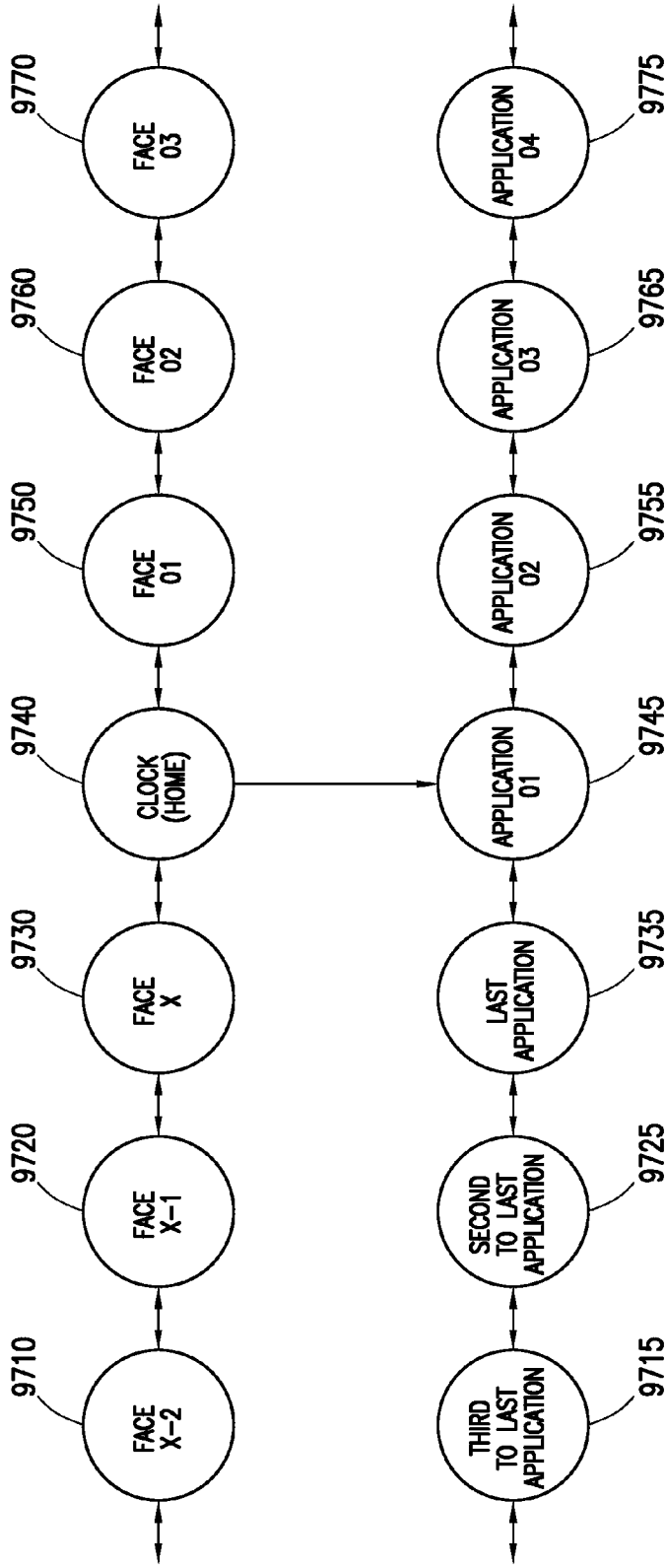
9710
FACE X-2
9720
FACE X-1
9730
FACE X
9740
CLOCK (HOME)
9750
FACE 01
9760
FACE 02
9770
FACE 03
9715
THIRD TO LAST APPLICATION
9725
SECOND TO LAST APPLICATION
9735
LAST APPLICATION
9745
APPLICATION 01
9755
APPLICATION 02
9765
APPLICATION 03
9775
APPLICATION 04

FIG. 97

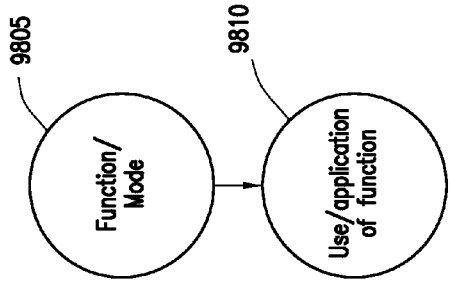

FIG. 98A

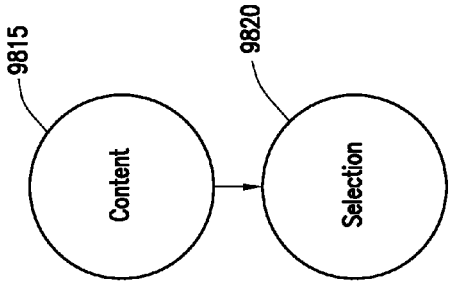

FIG. 98B

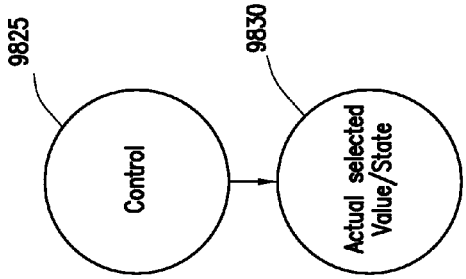

FIG. 98C

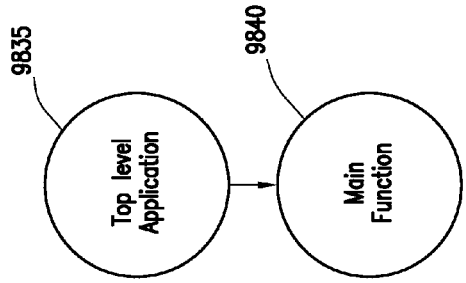

FIG. 98D

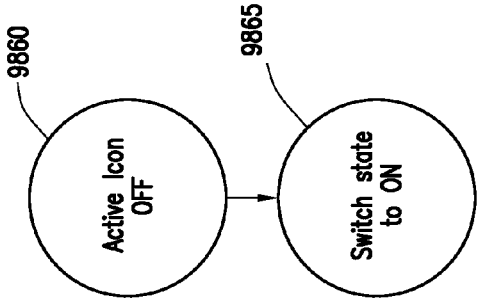

FIG. 98F

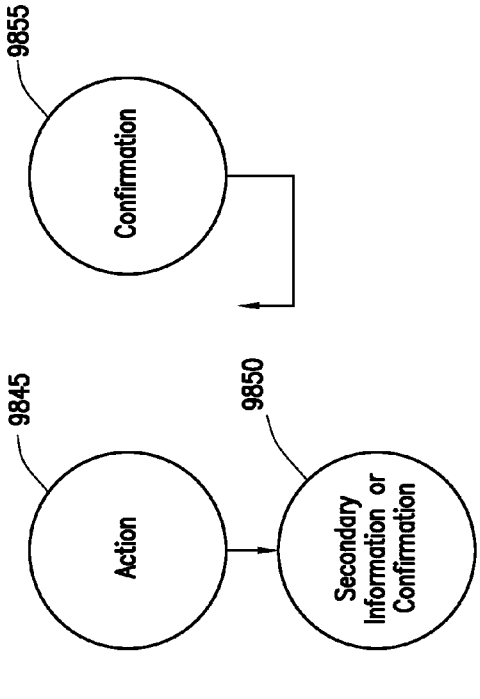

FIG. 98E

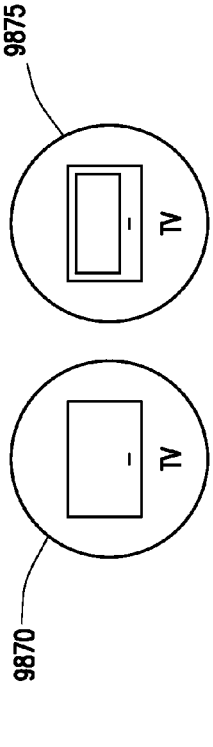

FIG. 98G

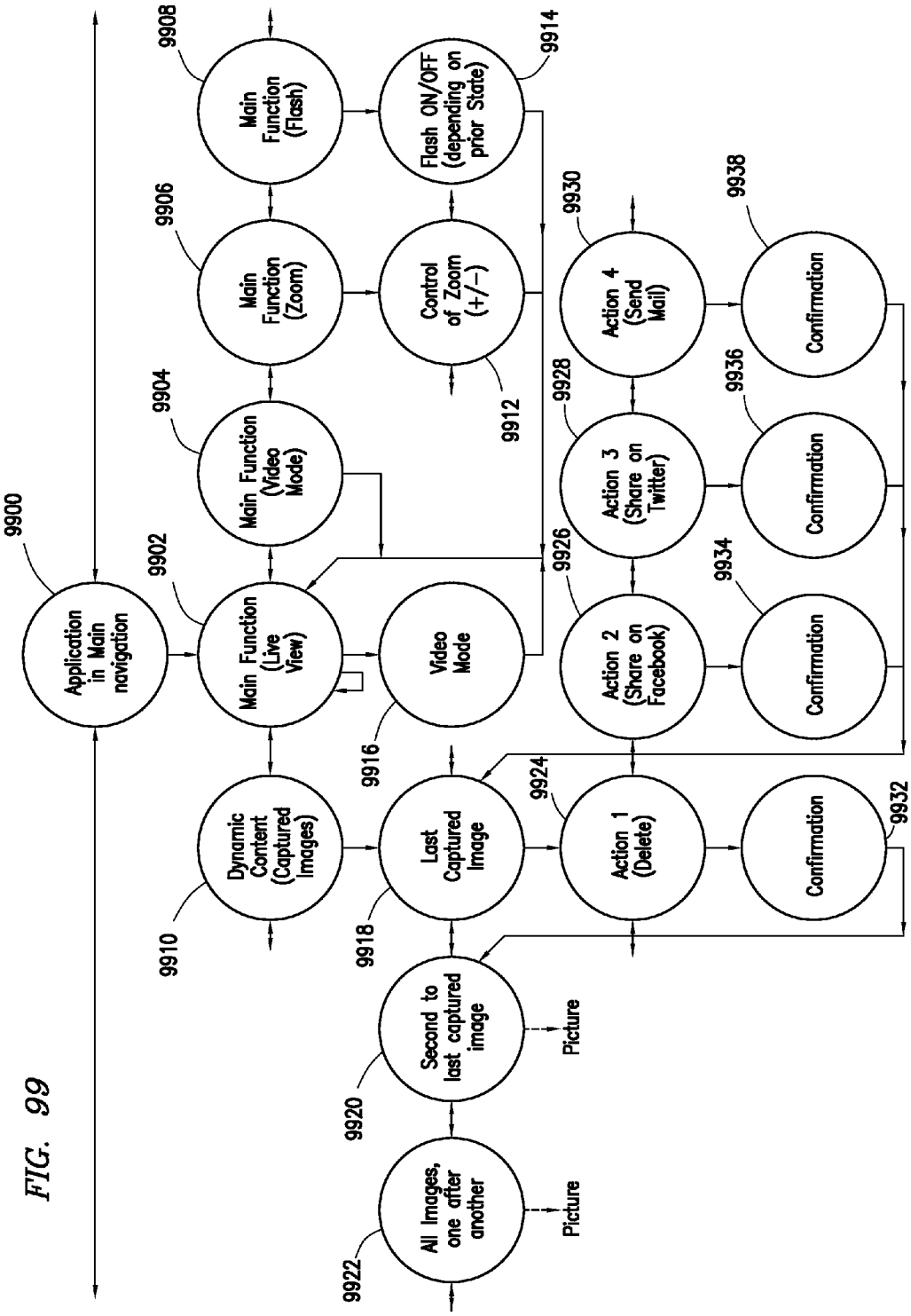
9900
Application in Main navigation
9902
Main Function (Live View)
9904
Main Function (Video Mode)
9906
Main Function (Zoom)
9908
Main Function (Flash)
9910
Dynamic Content (Captured Images)
9912
Control of Zoom (+/−)
9914
Flash ON/OFF (depending on prior State)
9916
Video Mode
9918
Last Captured Image
9920
Second to last captured image
9922
All Images, one after another
Picture
Picture
9924
Action 1 (Delete)
9926
Action 2 (Share on Facebook)
9928
Action 3 (Share on Twitter)
9930
Action 4 (Send Mail)
9932
Confirmation
9934
Confirmation
9936
Confirmation
9938
Confirmation

FIG. 99

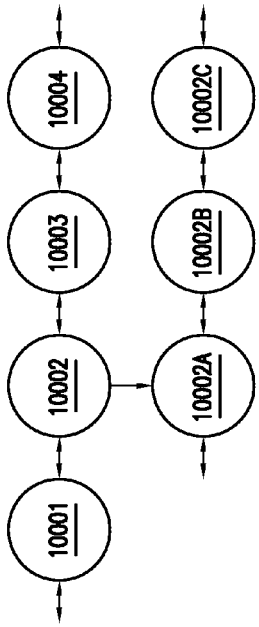

FIG. 100A

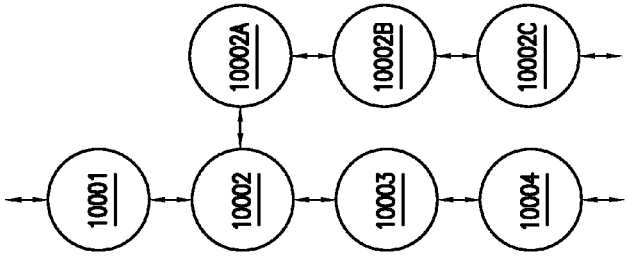

FIG. 100B

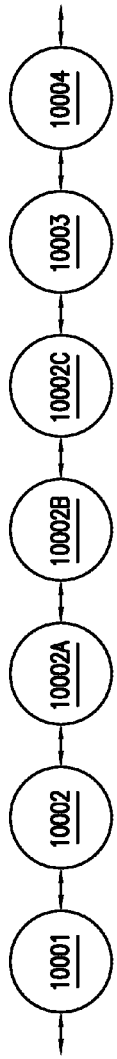

FIG. 100C

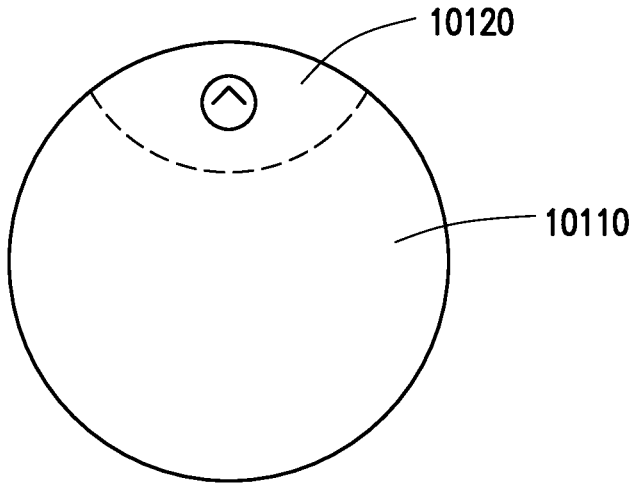

FIG. 101A

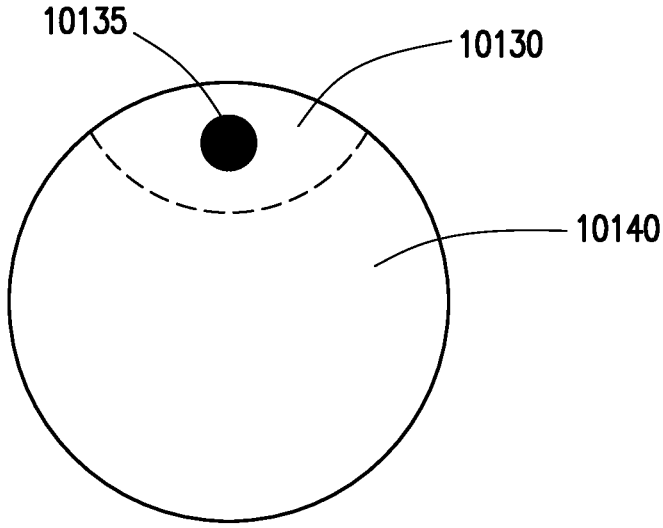

FIG. 101B

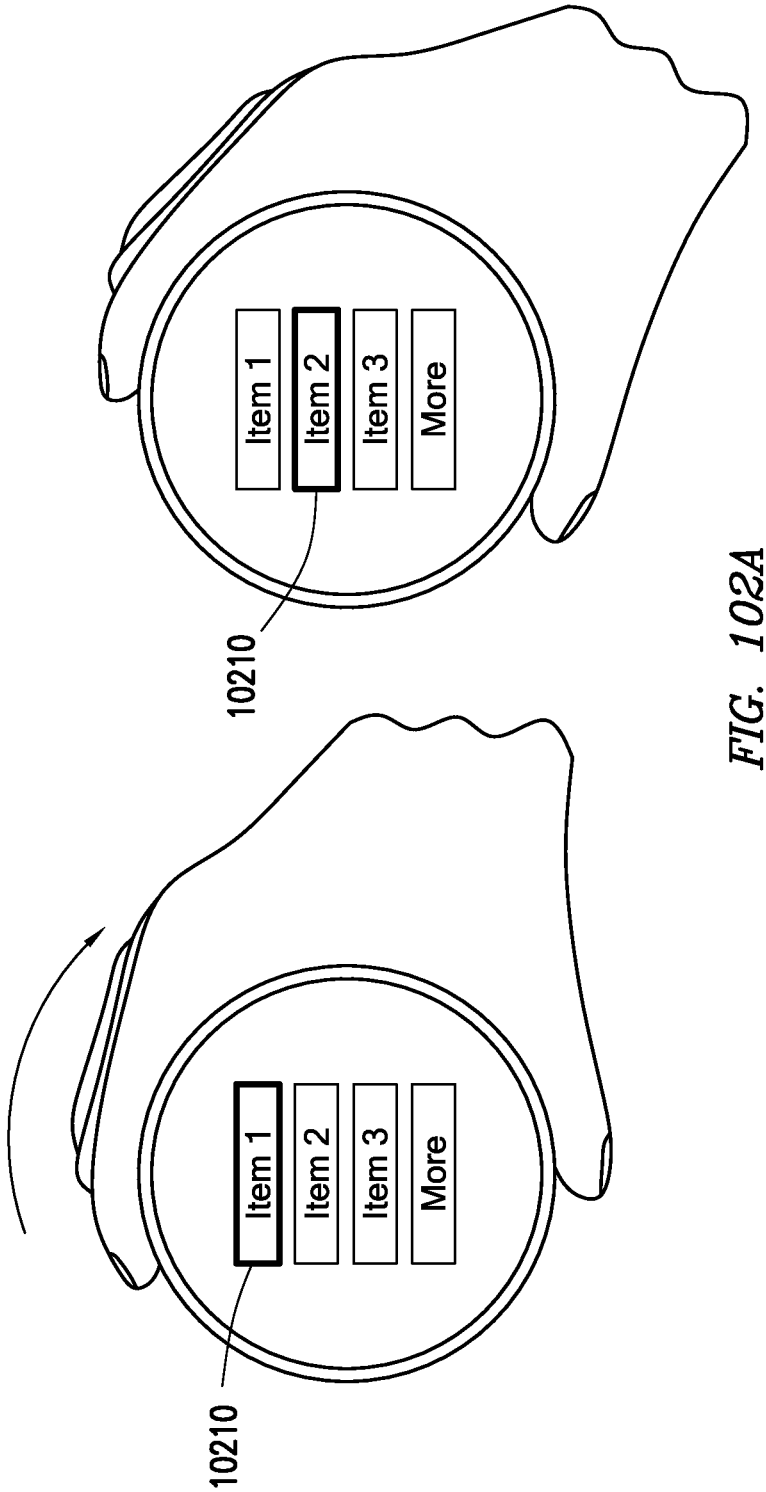

FIG. 102A

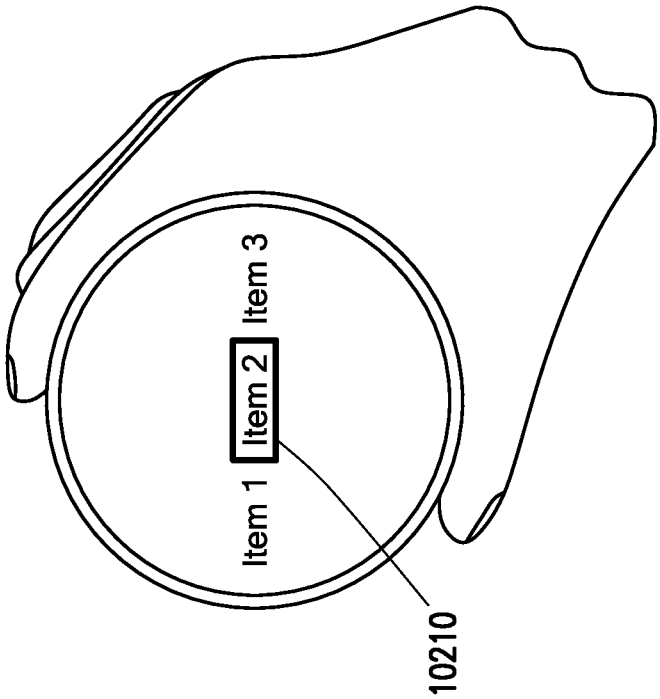

FIG. 102B

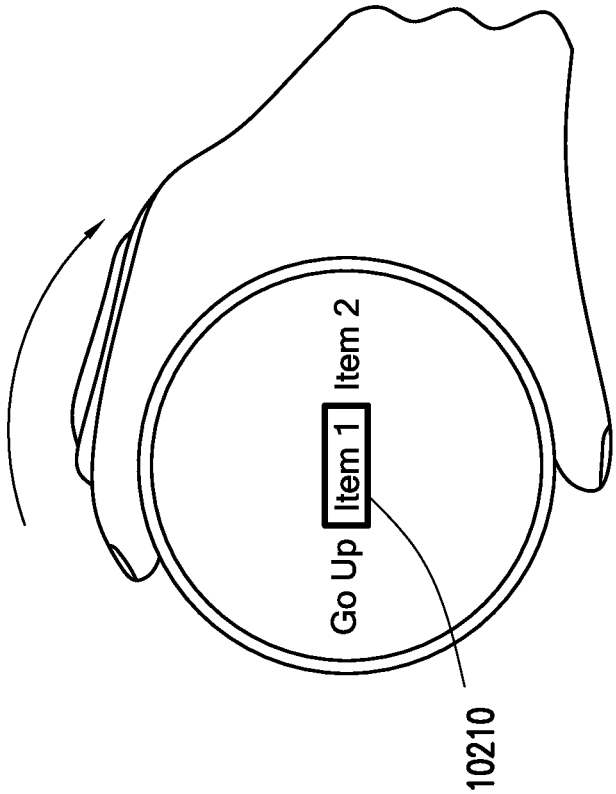

FIG. 102B

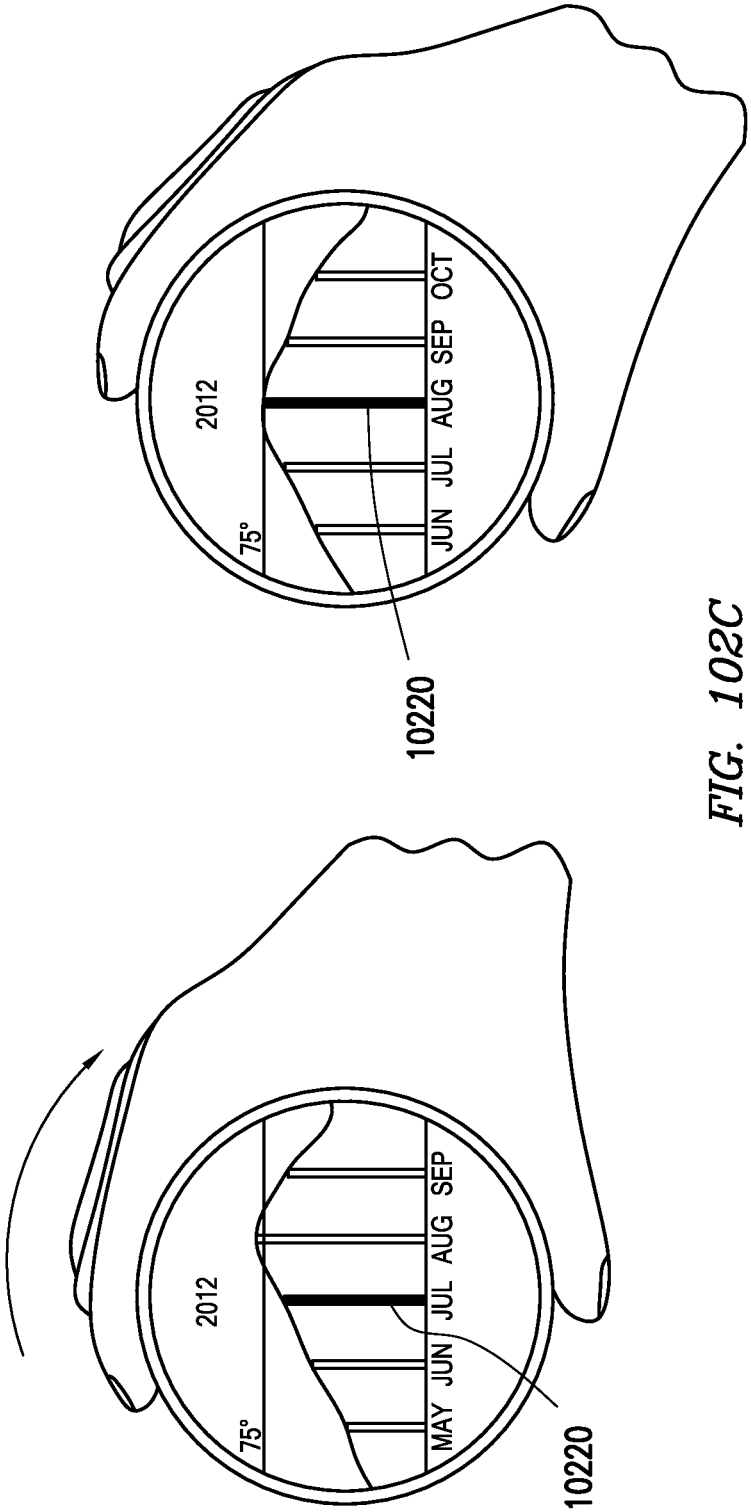
2012
75°
JUN JUL AUG SEP OCT
10220
2012
75°
MAY JUN JUL AUG SEP
10220

FIG. 102C

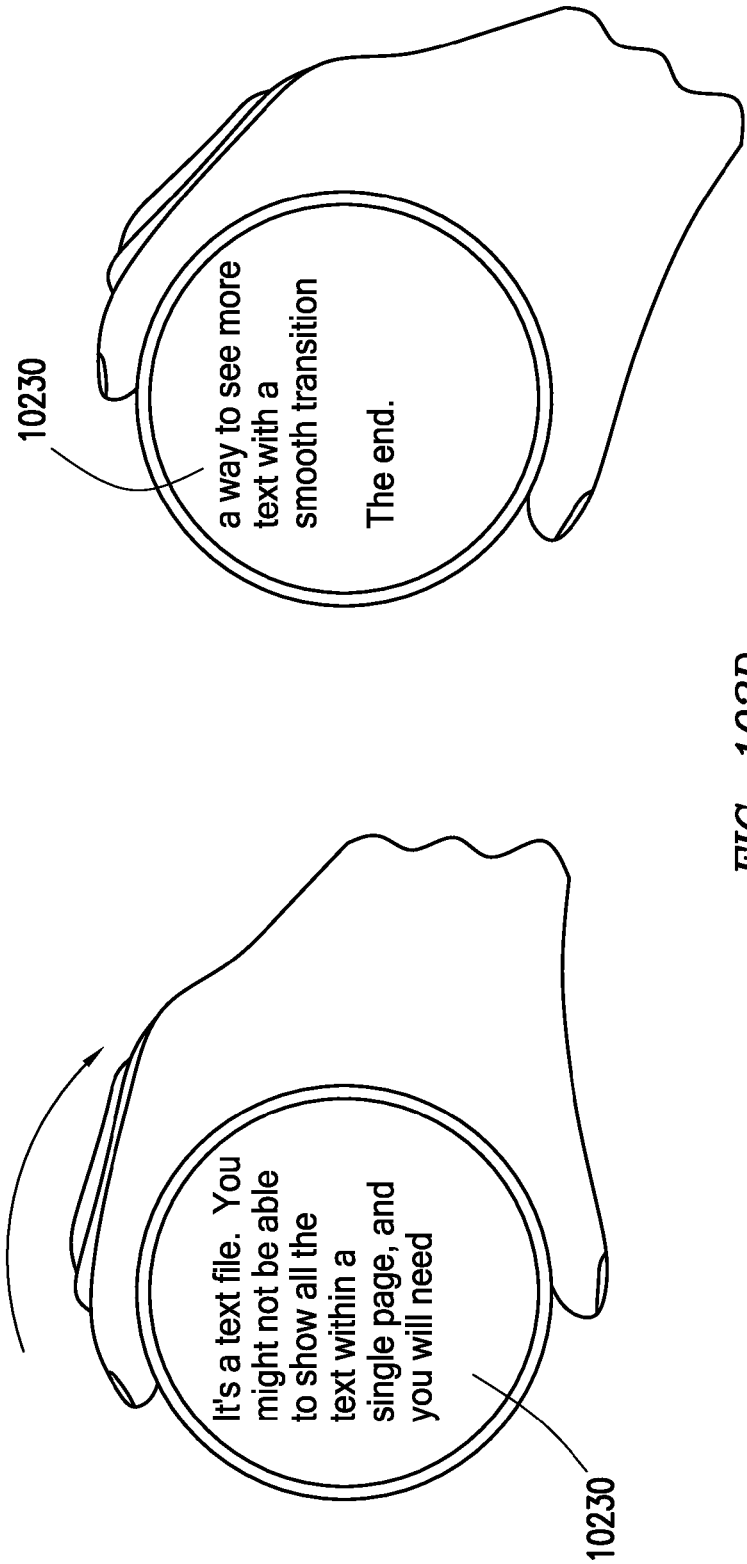
10230
a way to see more
text with a
smooth transition
The end.
It's a text file. You
might not be able
to show all the
text within a
single page, and
you will need
10230

FIG. 102D

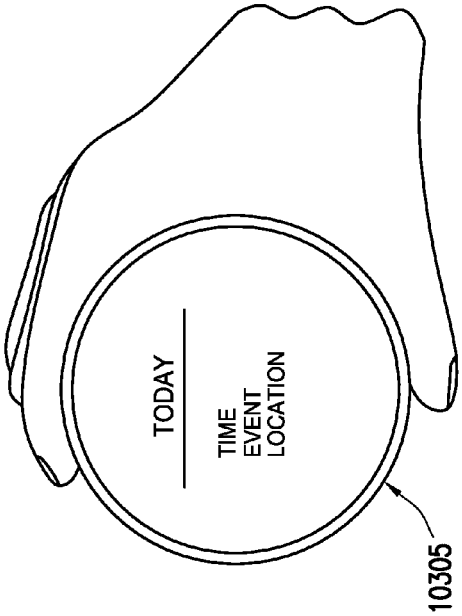

FIG. 103A

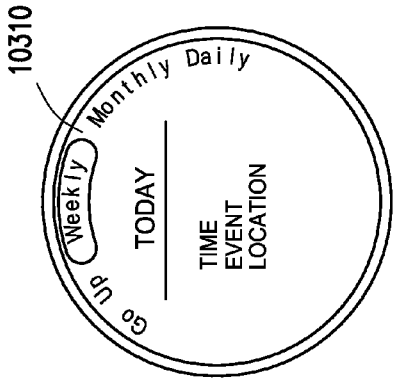

FIG. 103B

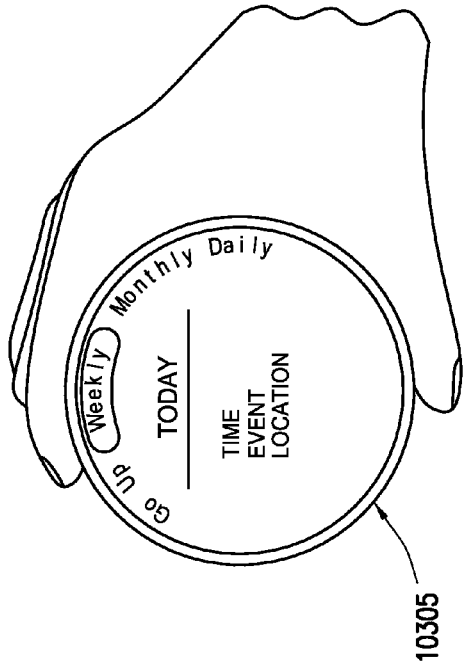

FIG. 103C

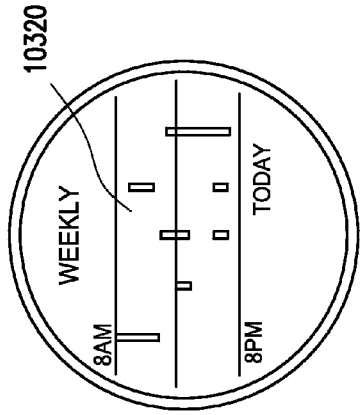

FIG. 103D

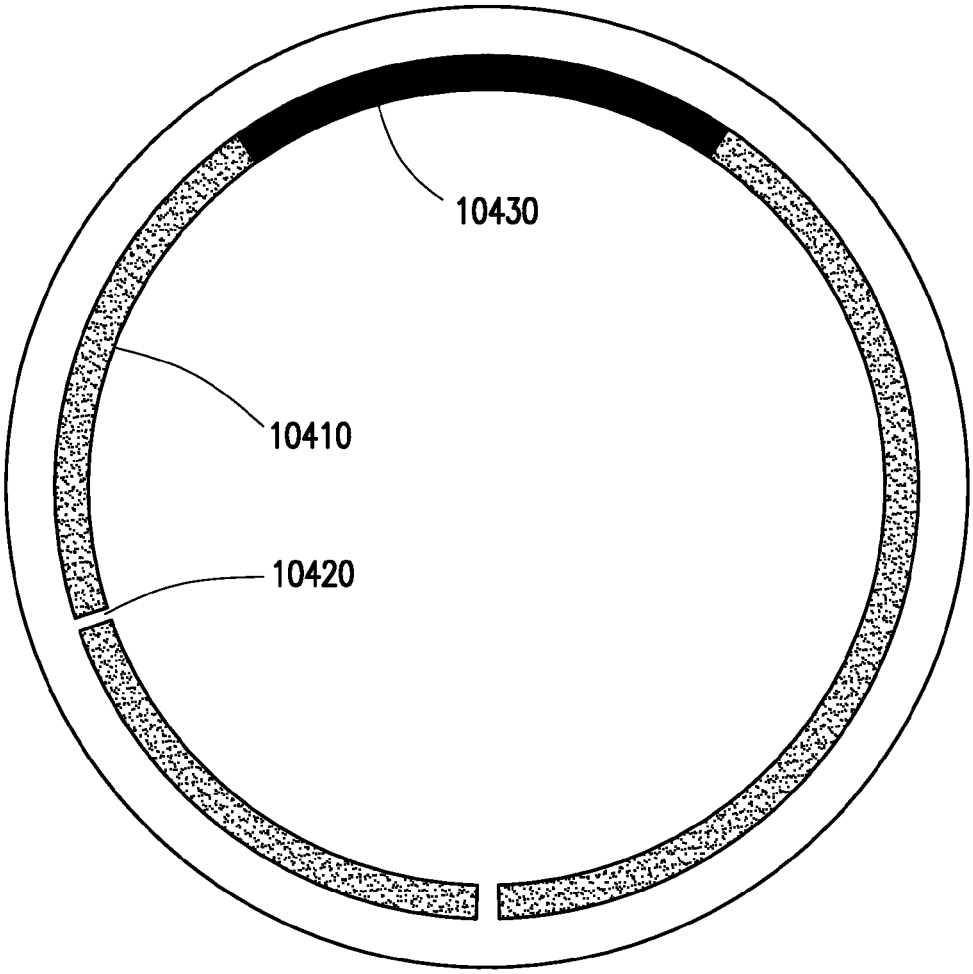

FIG. 104

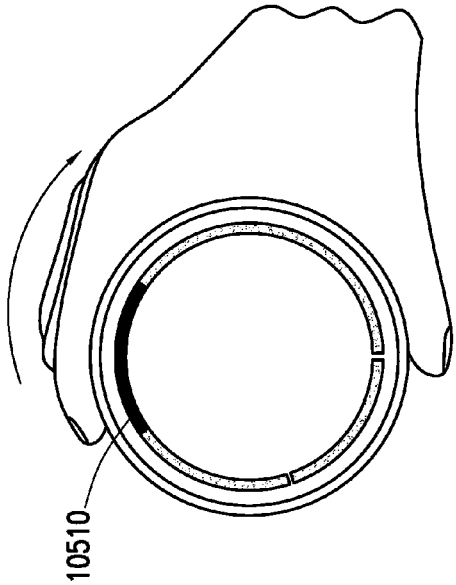

FIG. 105A

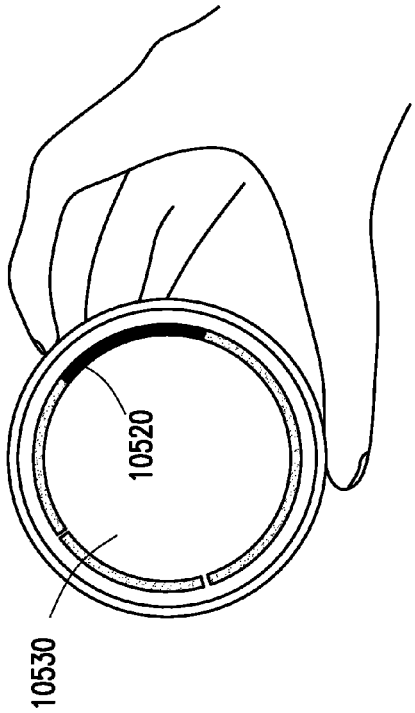

FIG. 105B

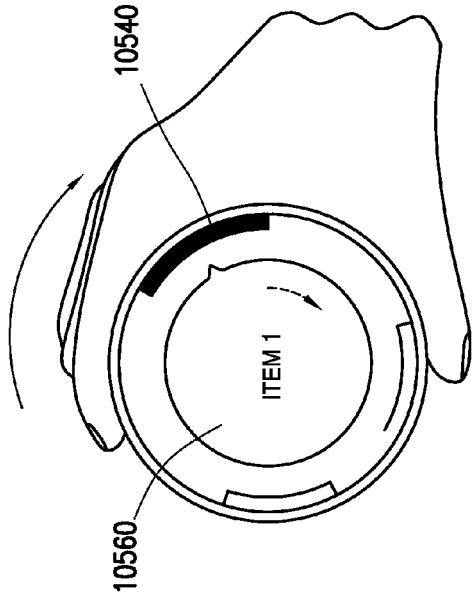

FIG. 105C

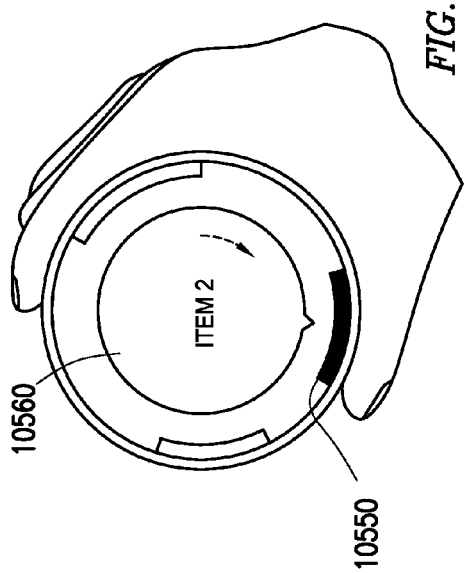

FIG. 105D

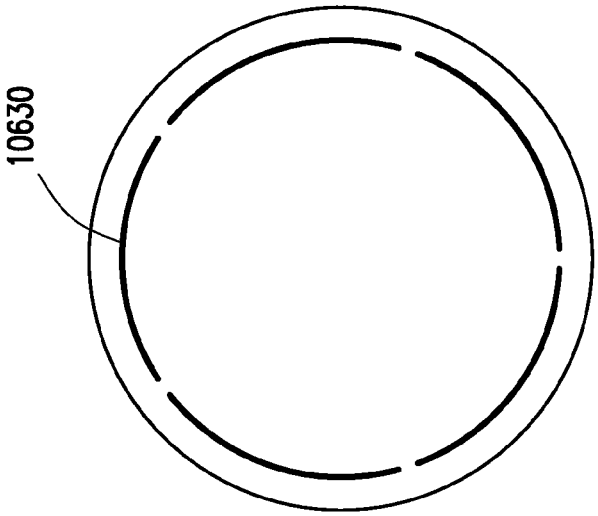

FIG. 106C

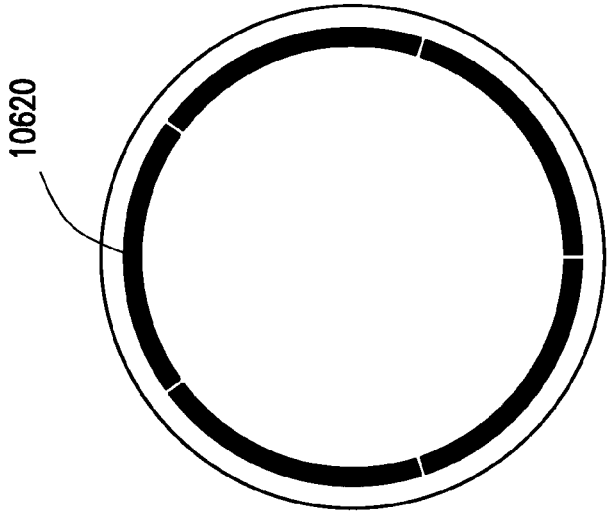

FIG. 106B

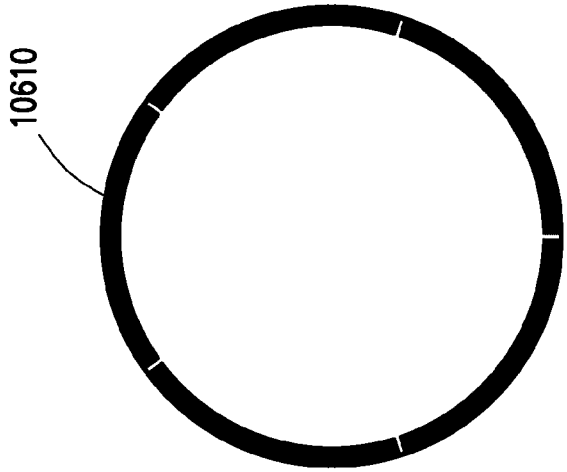

FIG. 106A

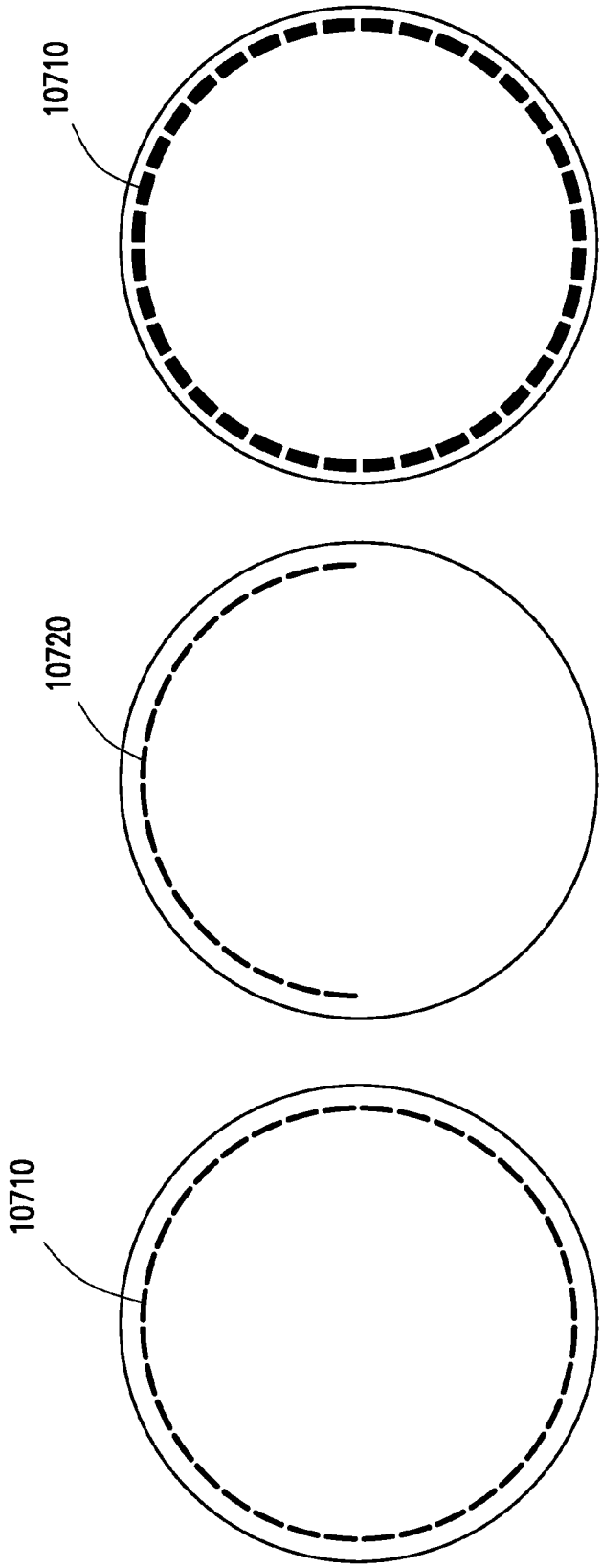

FIG. 107A

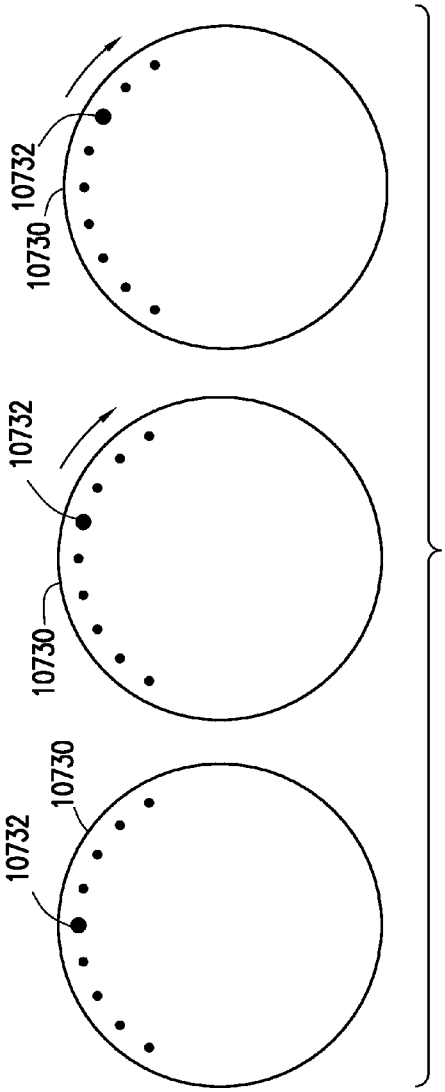

FIG. 107B

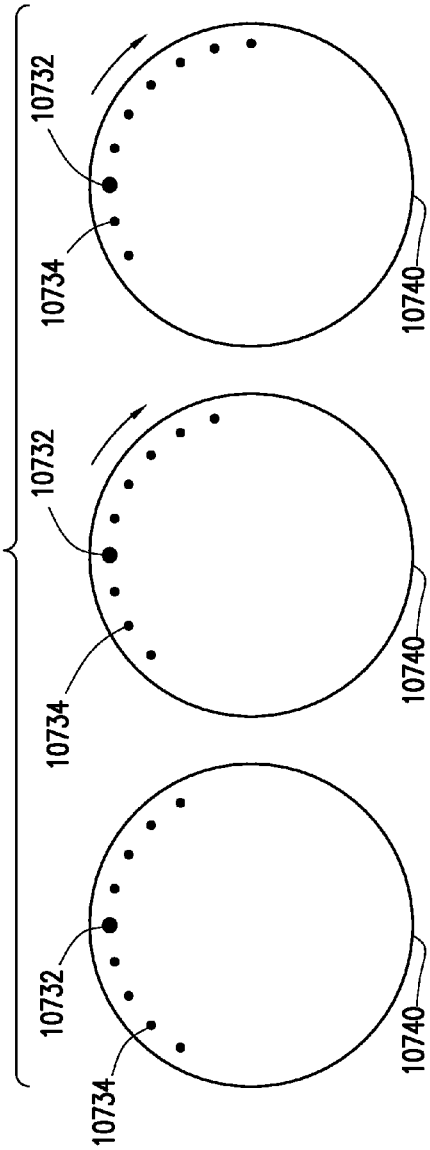

FIG. 107C

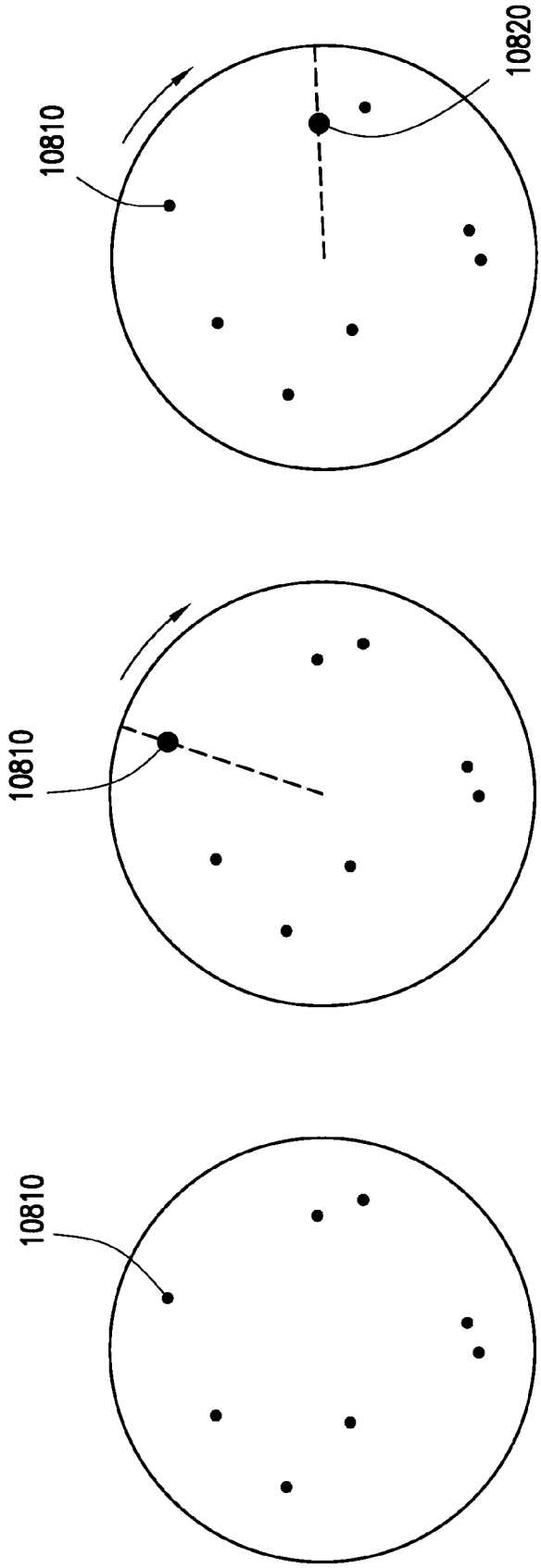

FIG. 108

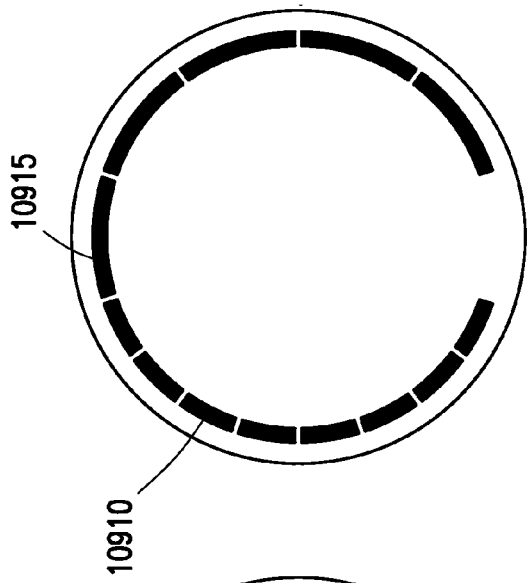

FIG. 109C

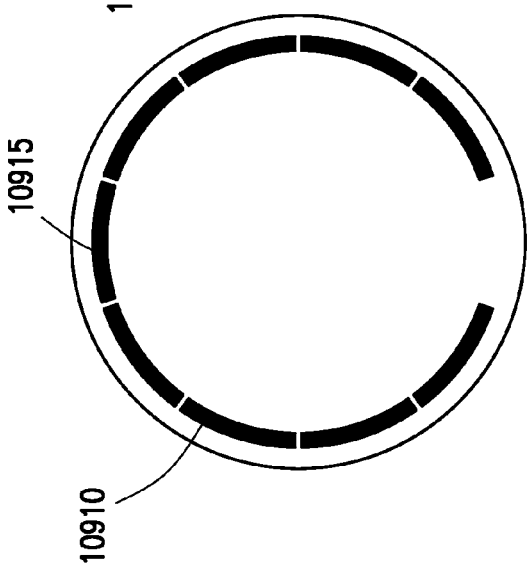

FIG. 109B

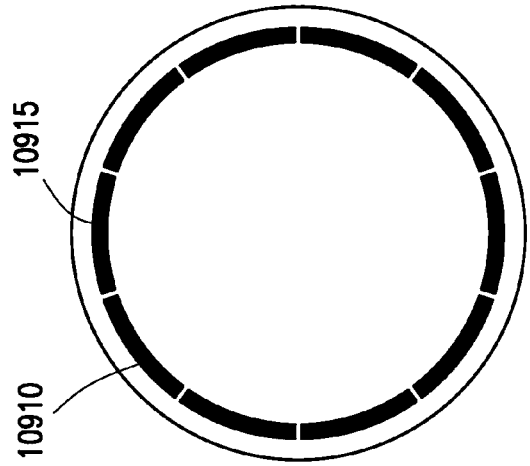

FIG. 109A

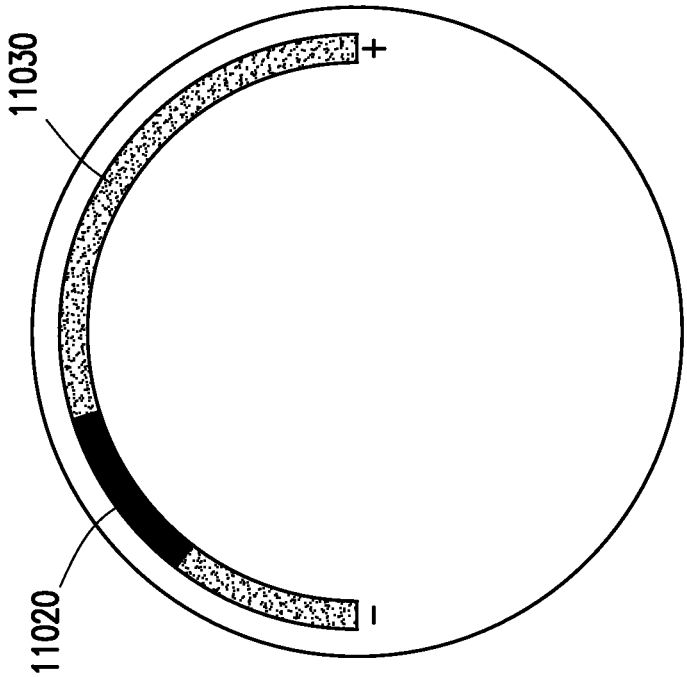

FIG. 110B

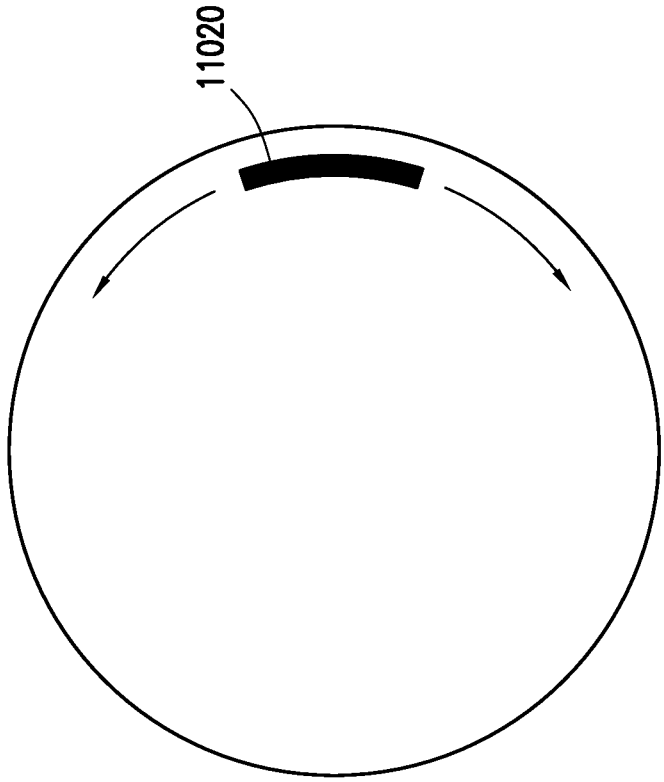

FIG. 110A

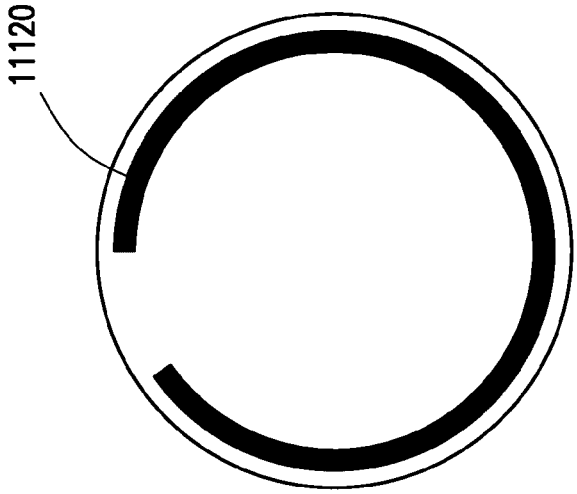

FIG. 111C

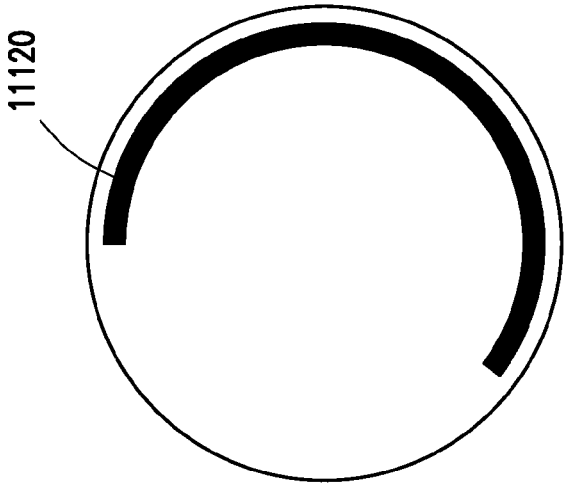

FIG. 111B

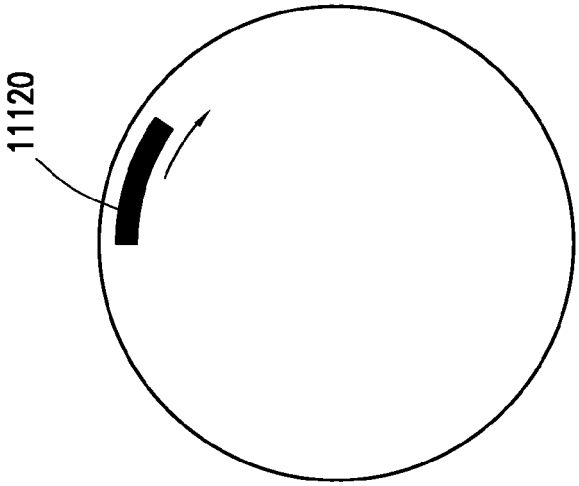

FIG. 111A

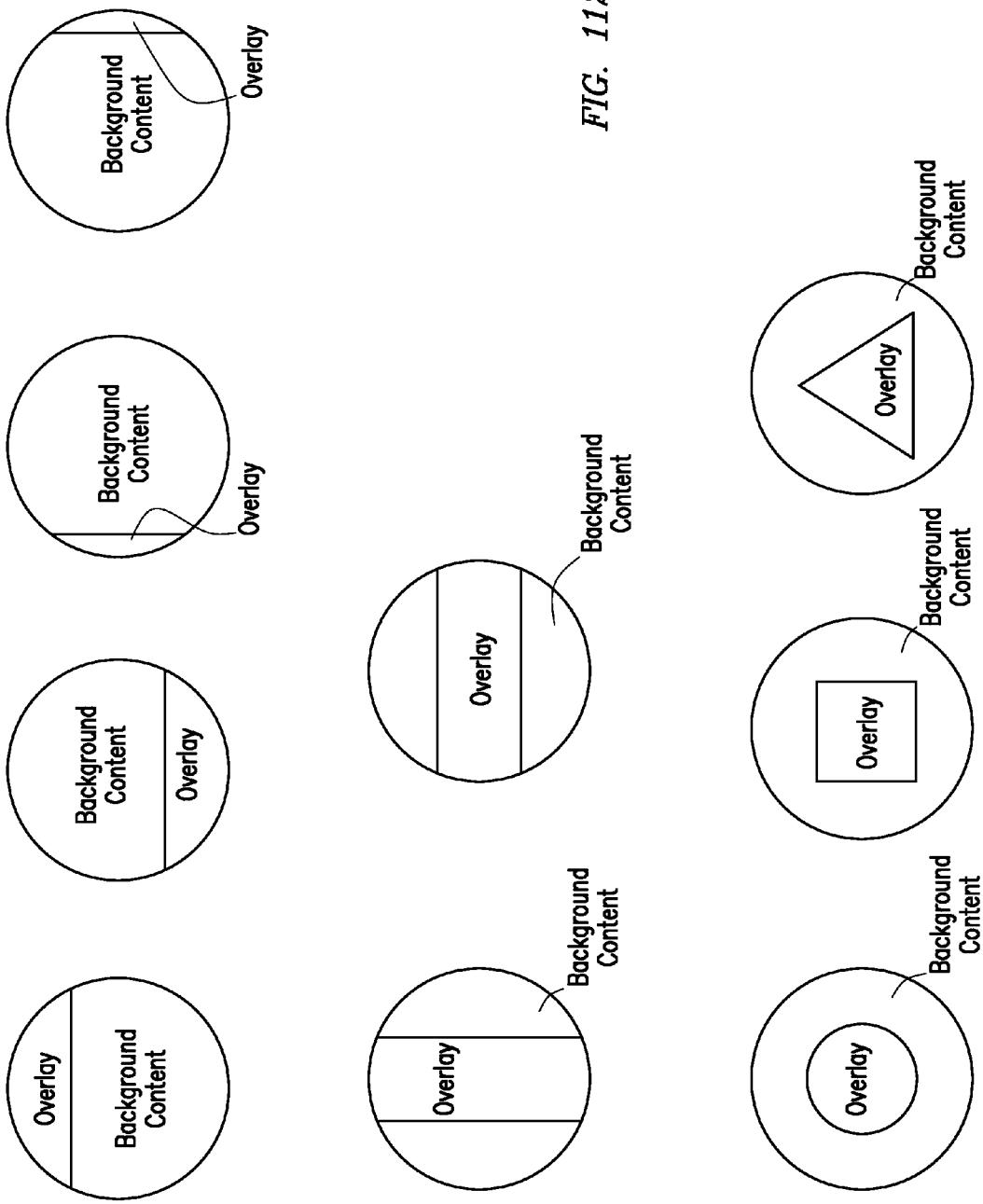
Overlay
Background Content
Background Content
Overlay
Background Content
Overlay
Background Content
Overlay
Overlay
Background Content
Overlay
Background Content
Overlay
Background Content
Overlay
Background Content

FIG. 112

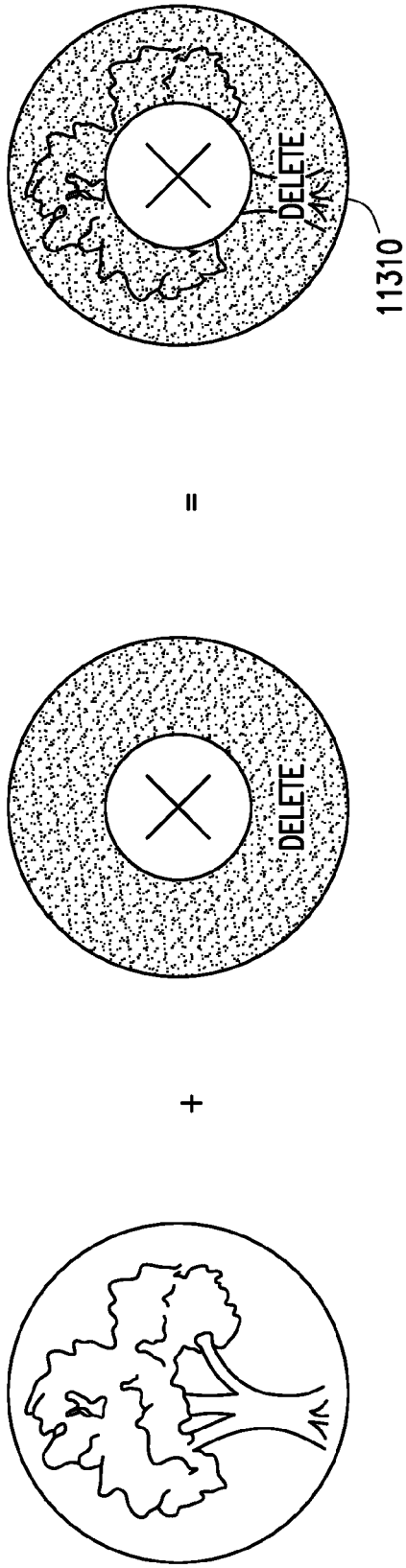

FIG. 113a

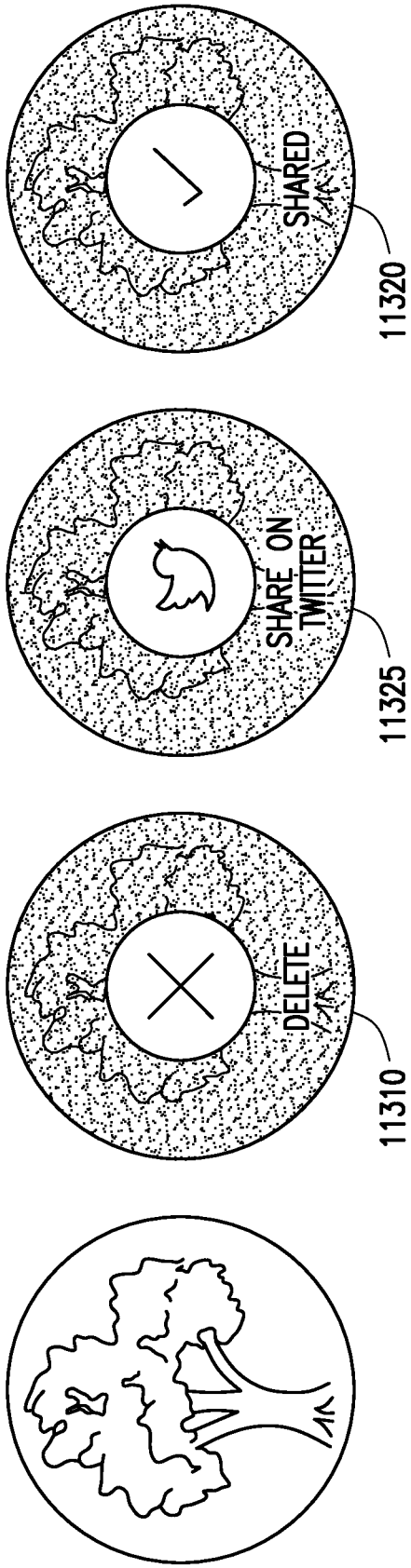

FIG. 113b

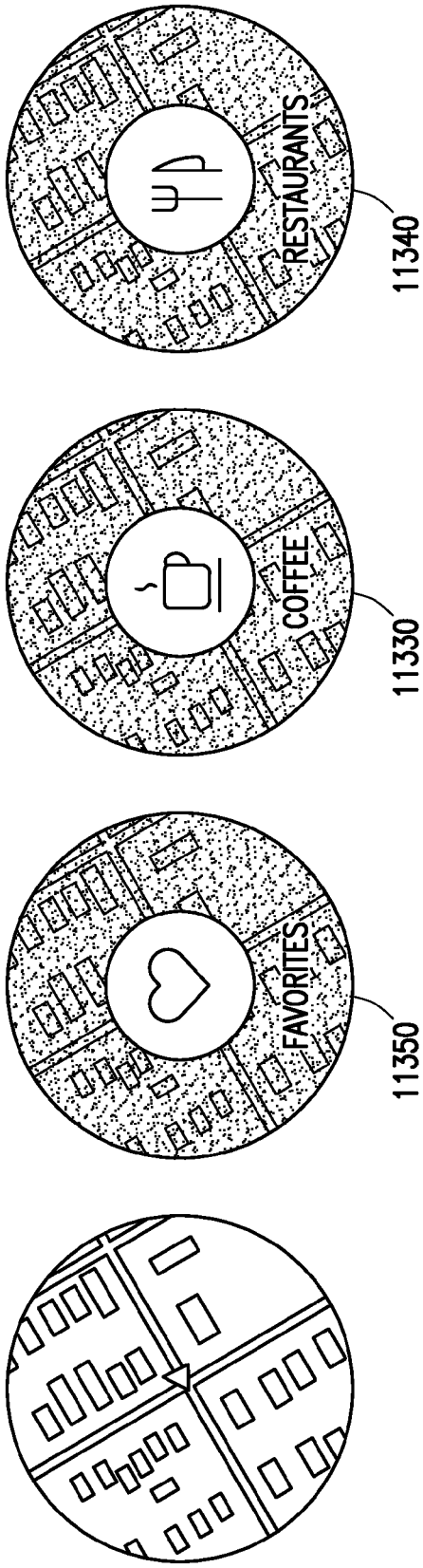

FIG. 113c

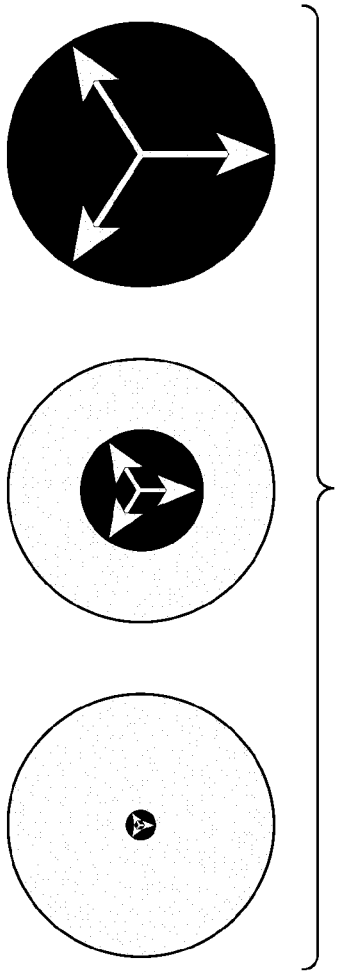

FIG. 114A

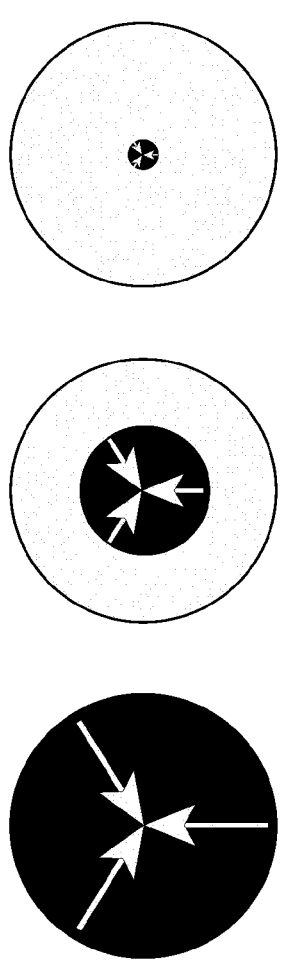

FIG. 114B

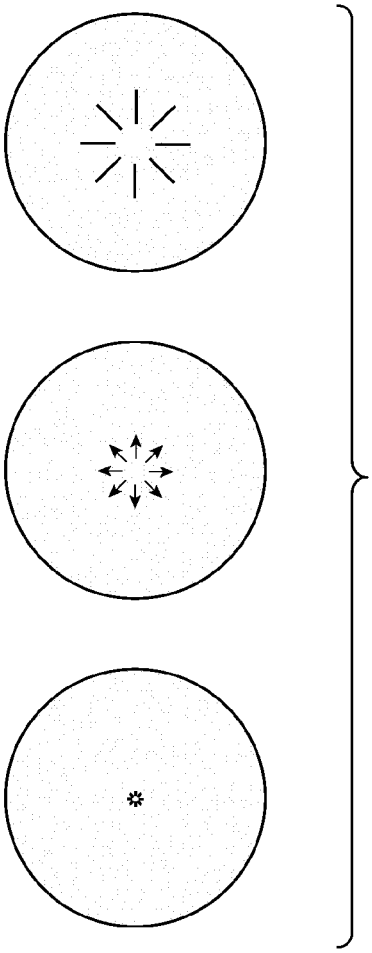

FIG. 115A

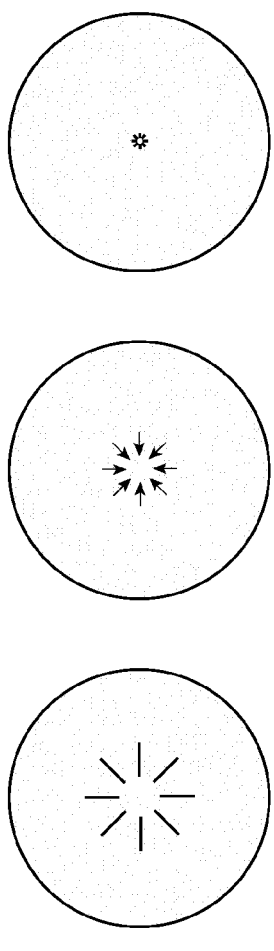

FIG. 115B

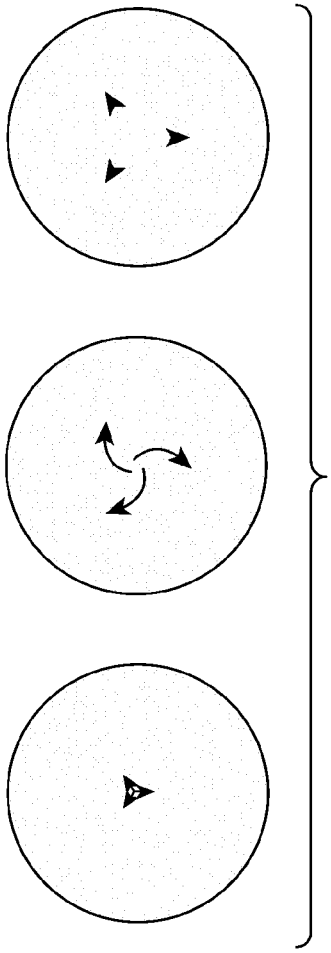

FIG. 116A

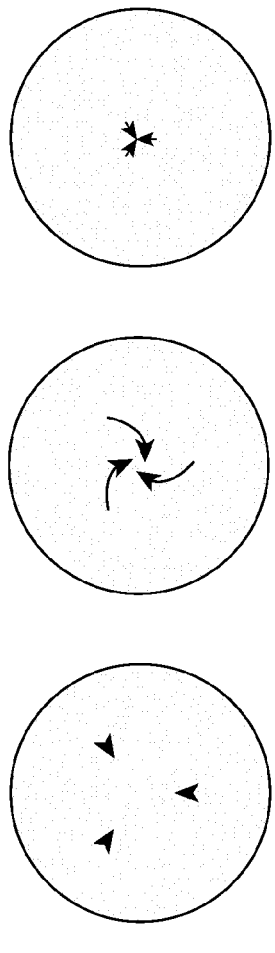

FIG. 116B

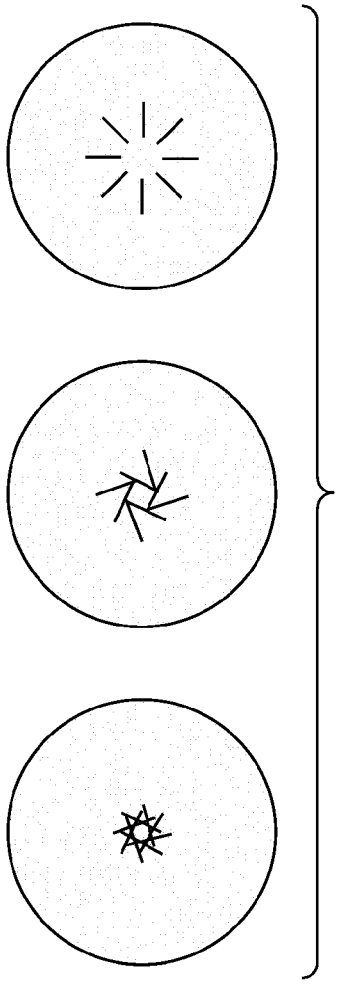

FIG. 117A

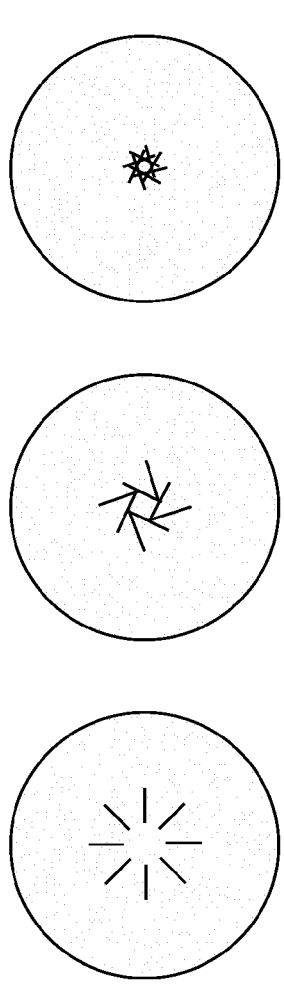

FIG. 117B

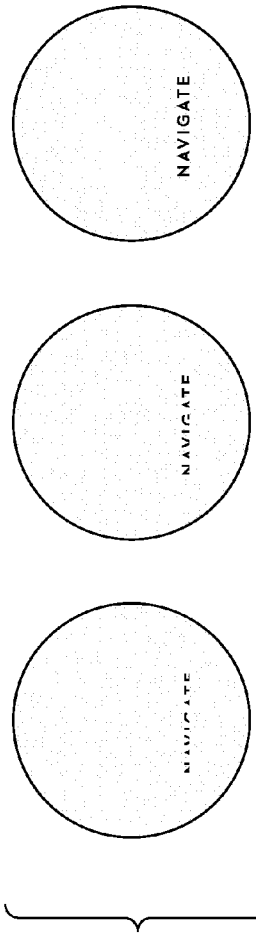

FIG. 118A

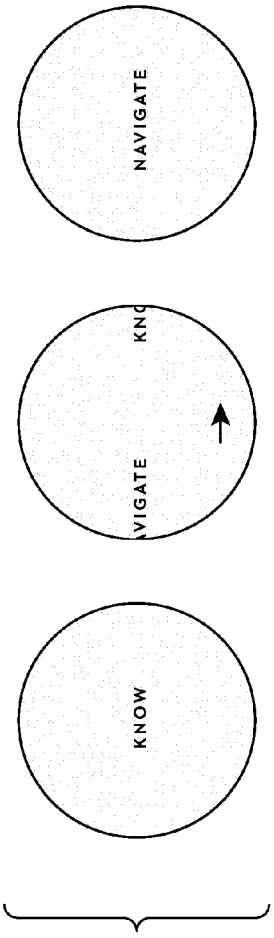

FIG. 118B

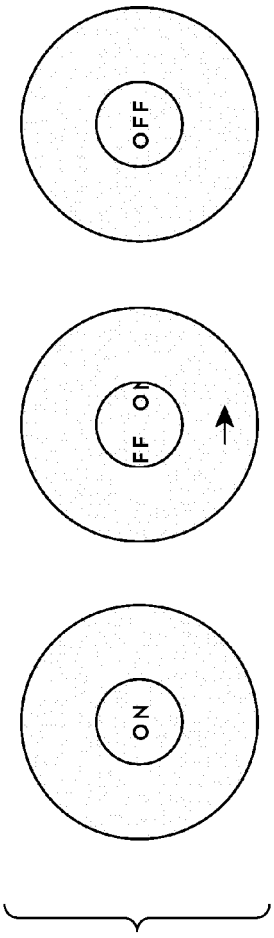

FIG. 118C

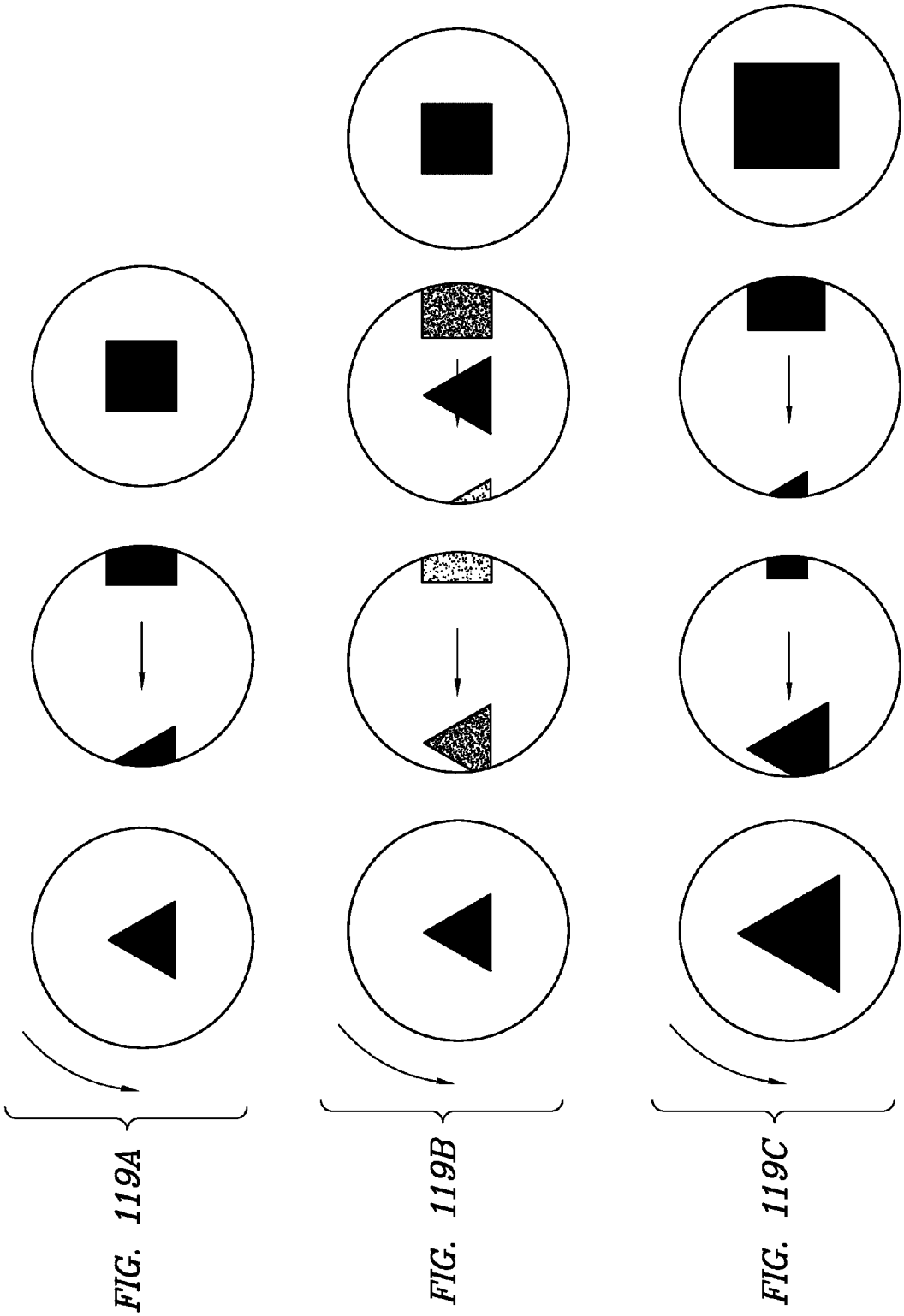

FIG. 119A

FIG. 119B

FIG. 119C

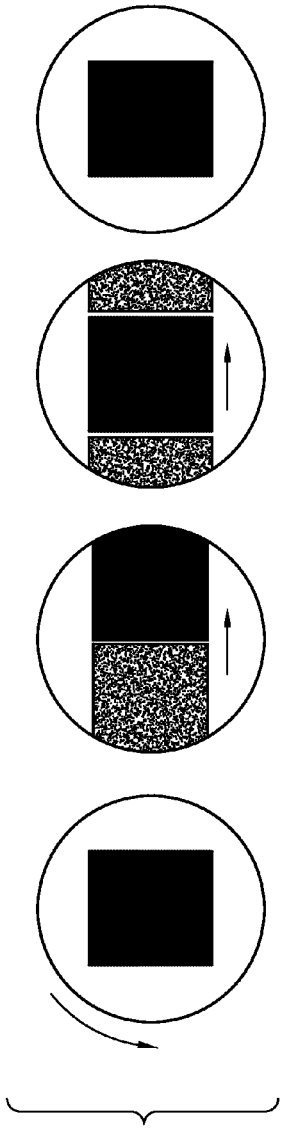

FIG. 120A

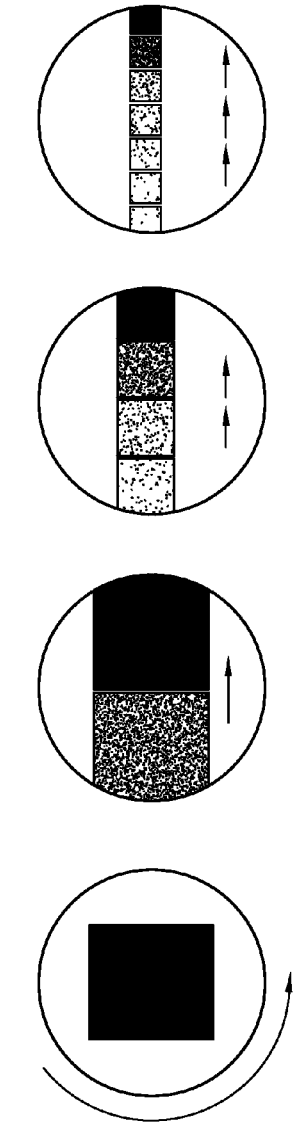

FIG. 120B

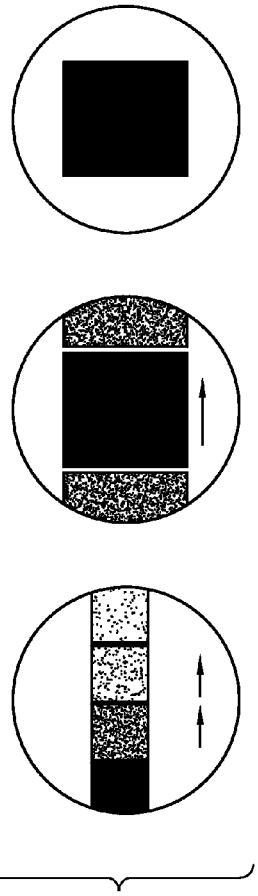

FIG. 120C

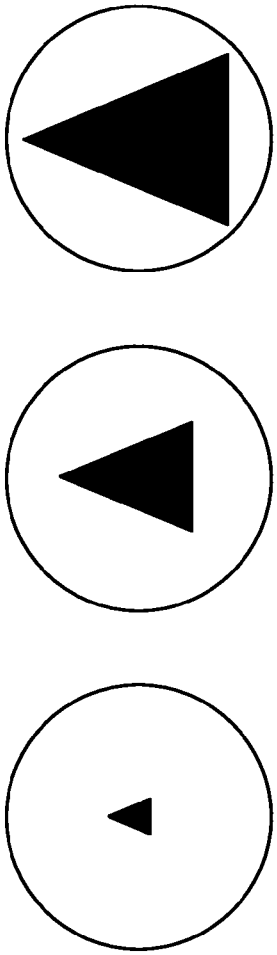

FIG. 121A

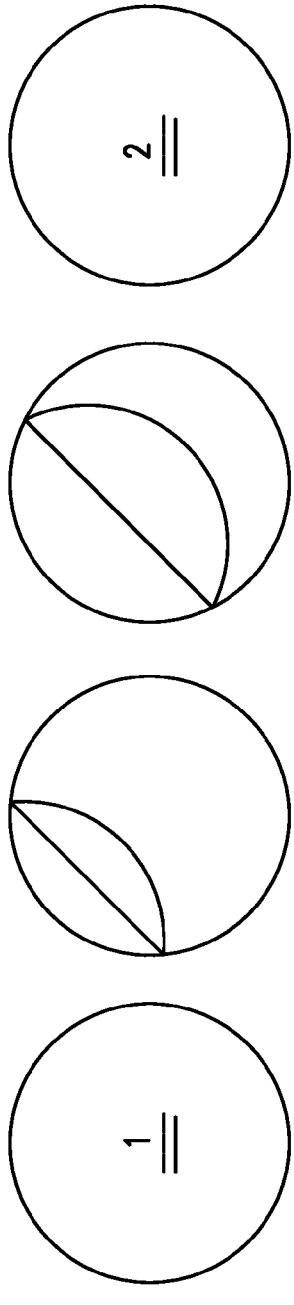

FIG. 121B

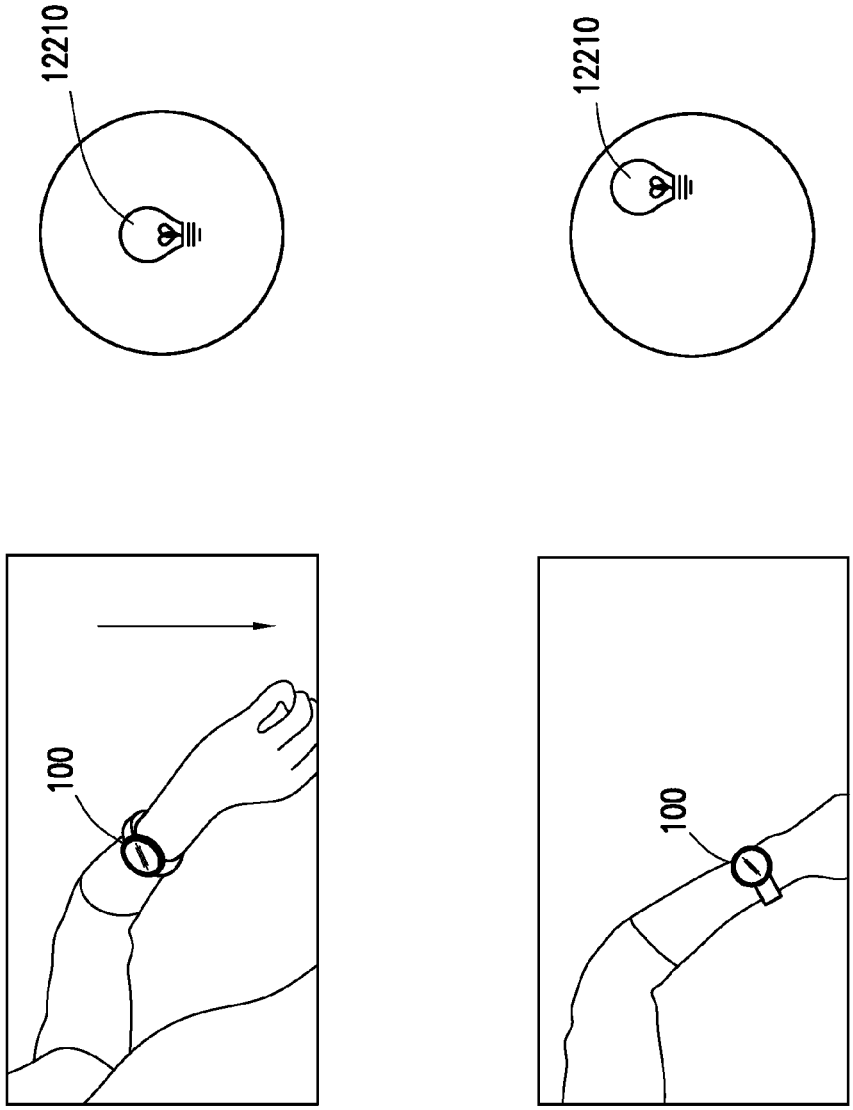

FIG. 122

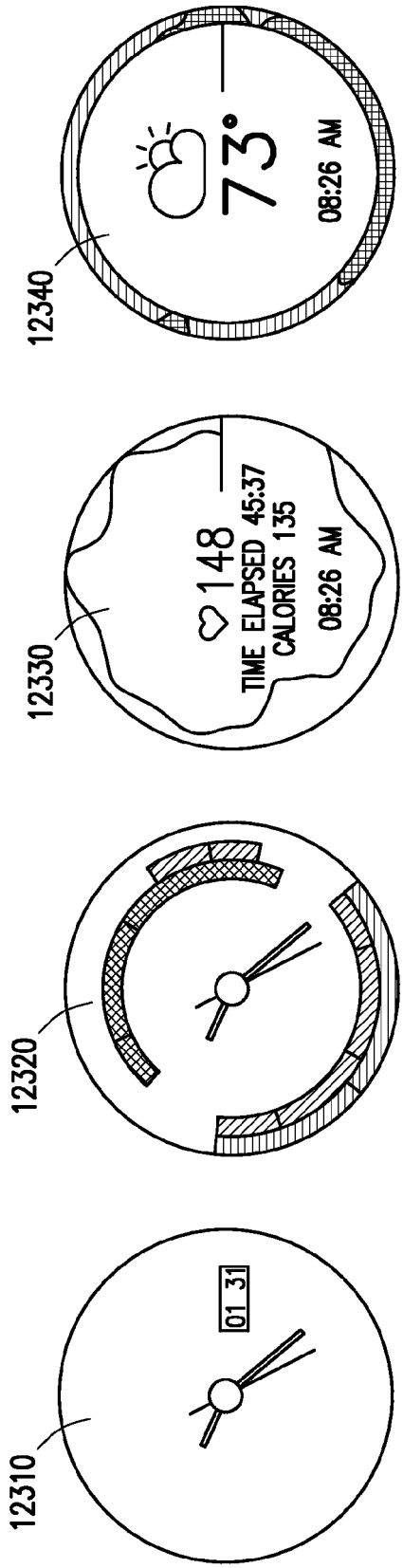
12310
01 31
12320
12330
148
TIME ELAPSED 45:37
CALORIES 135
08:26 AM
12340
73°
08:26 AM

FIG. 123

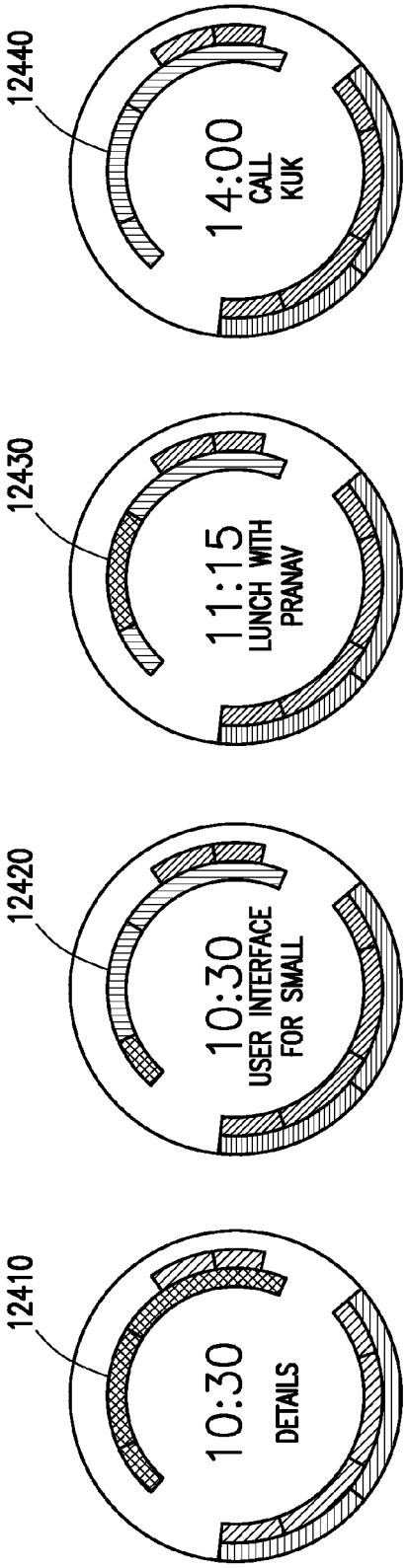
12410
10:30
DETAILS
12420
10:30
USER INTERFACE
FOR SMALL
12430
11:15
LUNCH WITH
PRANAV
12440
14:00
CALL
KUK

FIG. 124

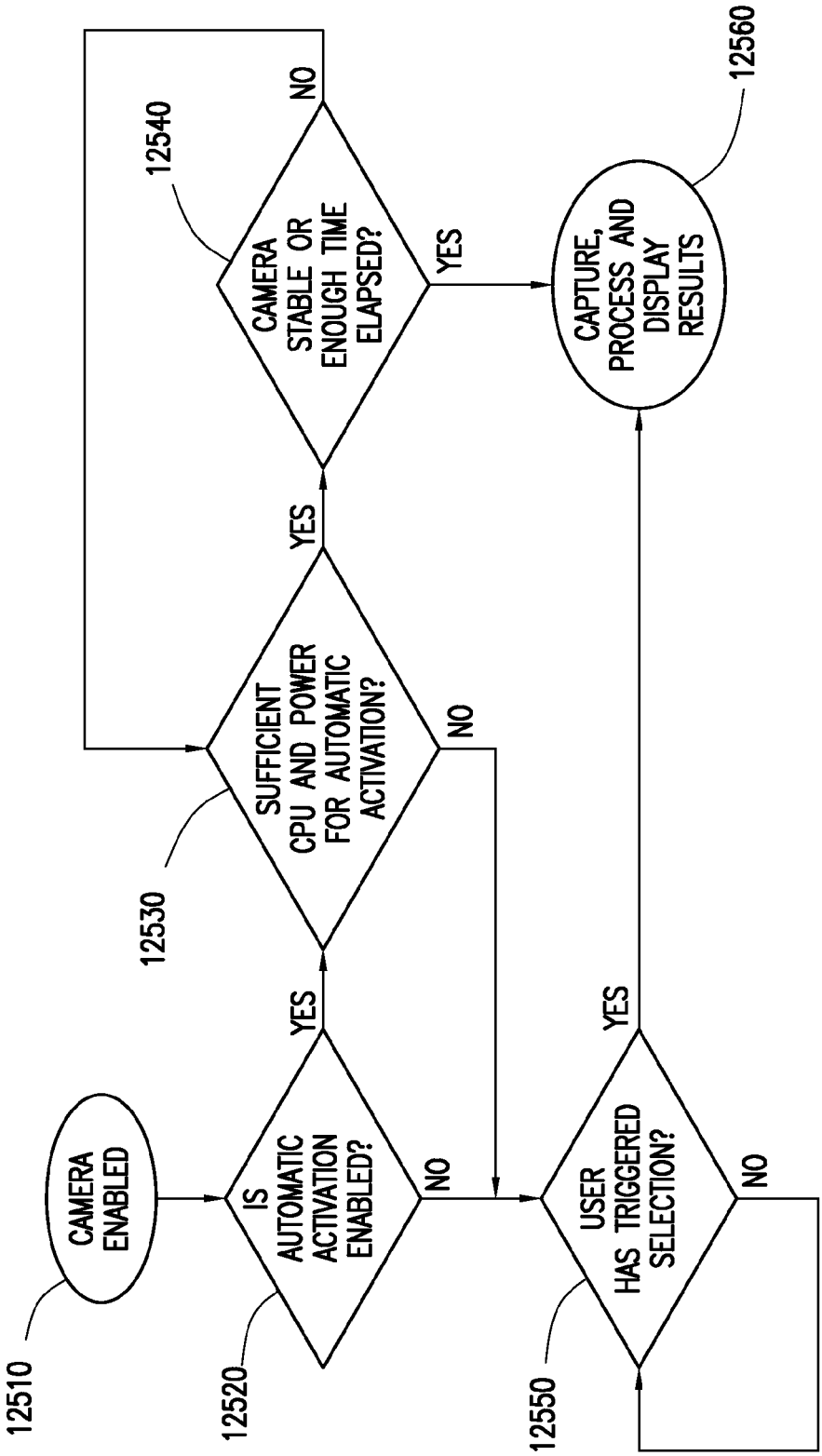
CAMERA ENABLED
12510
IS AUTOMATIC ACTIVATION ENABLED?
12520
YES
NO
SUFFICIENT CPU AND POWER FOR AUTOMATIC ACTIVATION?
12530
YES
NO
CAMERA STABLE OR ENOUGH TIME ELAPSED?
12540
YES
NO
USER HAS TRIGGERED SELECTION?
12550
YES
NO
CAPTURE, PROCESS AND DISPLAY RESULTS
12560

FIG. 125

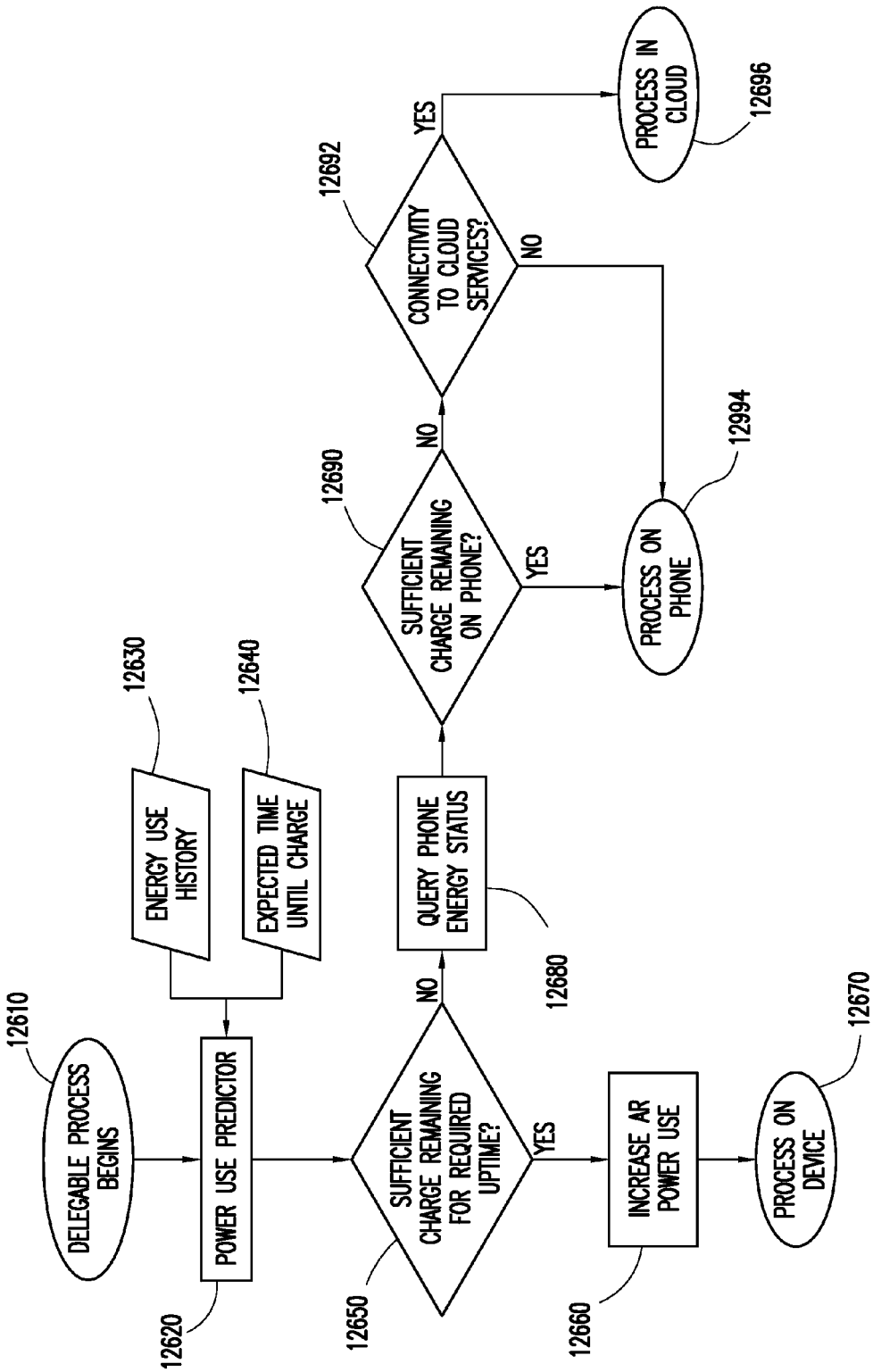
DELEGABLE PROCESS BEGINS
12610
ENERGY USE HISTORY
12630
EXPECTED TIME UNTIL CHARGE
12640
POWER USE PREDICTOR
12620
SUFFICIENT CHARGE REMAINING FOR REQUIRED UPTIME?
12650
NO
YES
QUERY PHONE ENERGY STATUS
12680
INCREASE AR POWER USE
12660
PROCESS ON DEVICE
12670
SUFFICIENT CHARGE REMAINING ON PHONE?
12690
NO
YES
PROCESS ON PHONE
12994
CONNECTIVITY TO CLOUD SERVICES?
12692
YES
NO
PROCESS IN CLOUD
12696

FIG. 126

	1 YEAR (12710)	3 YEAR (12720)	5 YEAR (12730)
DEVICE (e.g. WATCH)	++	+++	+++
PHONE	++	+	–
SERVER	+	++	+++

FIG. 127

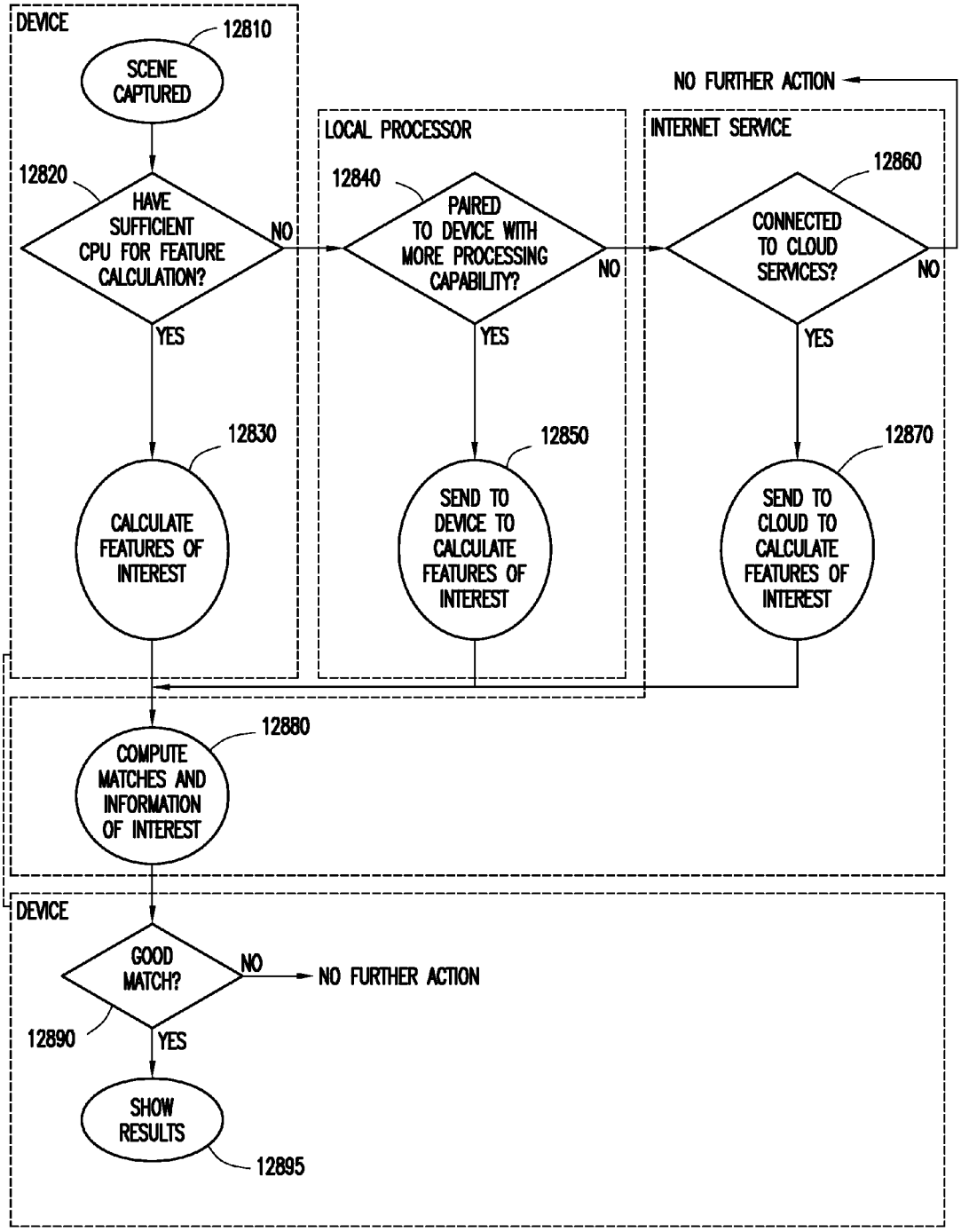
DEVICE
12810
SCENE CAPTURED
12820
HAVE SUFFICIENT CPU FOR FEATURE CALCULATION?
NO
YES
12830
CALCULATE FEATURES OF INTEREST
LOCAL PROCESSOR
12840
PAIRED TO DEVICE WITH MORE PROCESSING CAPABILITY?
NO
YES
12850
SEND TO DEVICE TO CALCULATE FEATURES OF INTEREST
NO FURTHER ACTION
INTERNET SERVICE
12860
CONNECTED TO CLOUD SERVICES?
NO
YES
12870
SEND TO CLOUD TO CALCULATE FEATURES OF INTEREST
12880
COMPUTE MATCHES AND INFORMATION OF INTEREST
DEVICE
GOOD MATCH?
NO
NO FURTHER ACTION
12890
YES
SHOW RESULTS
12895

FIG. 128

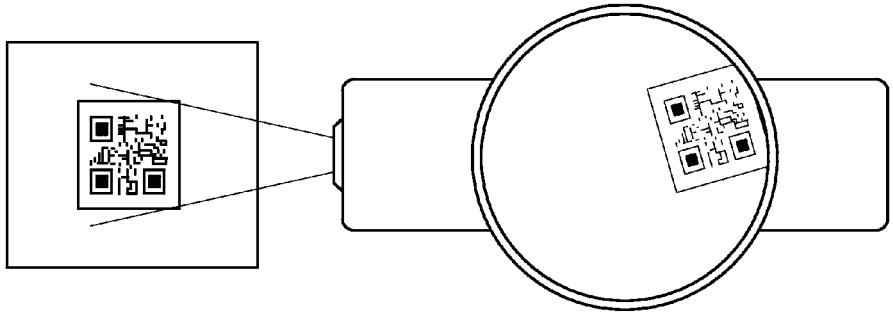

FIG. 129A

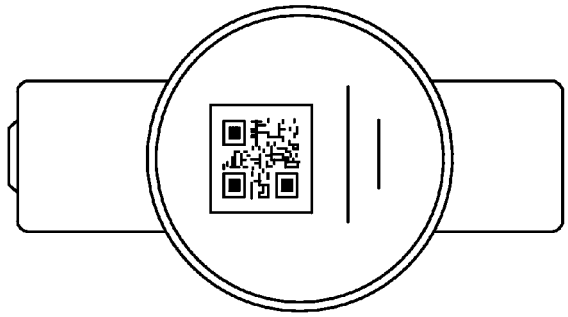

FIG. 129B

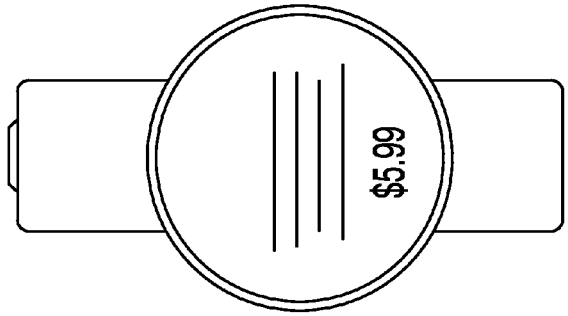

FIG. 129C

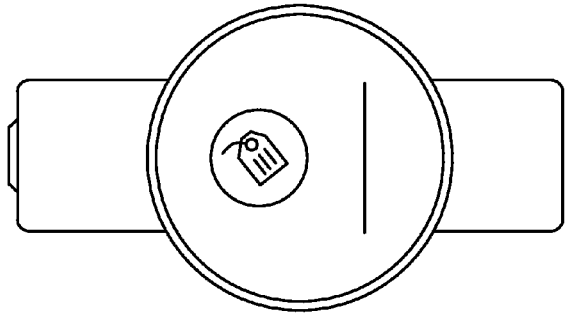

FIG. 129D

FIG. 130

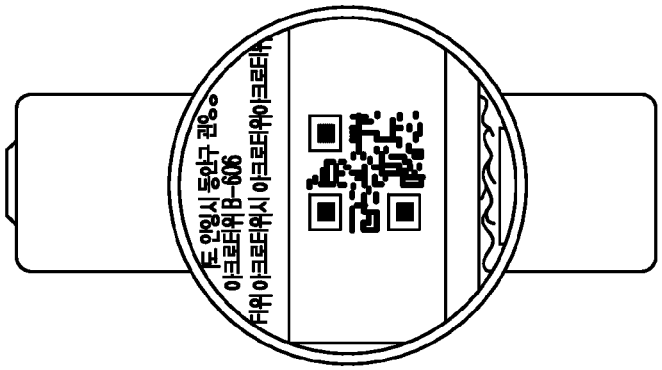

FIG. 131A

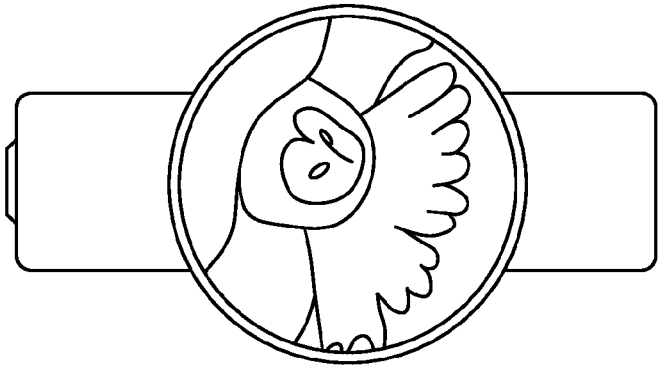

FIG. 131B

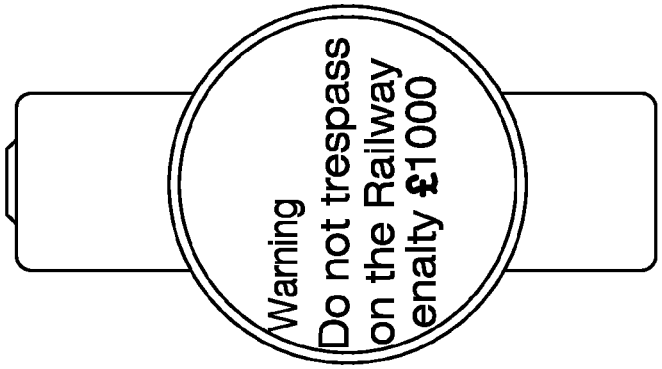

FIG. 131C

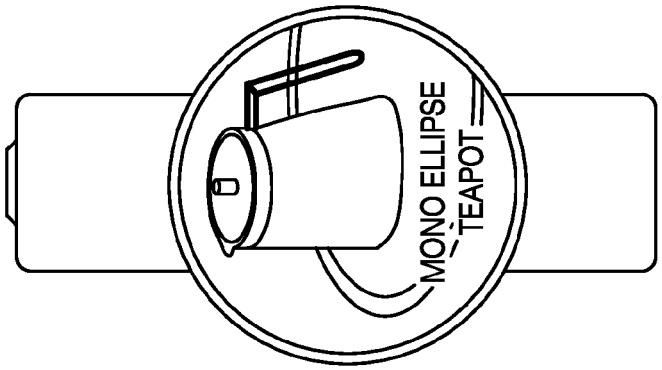

FIG. 131D

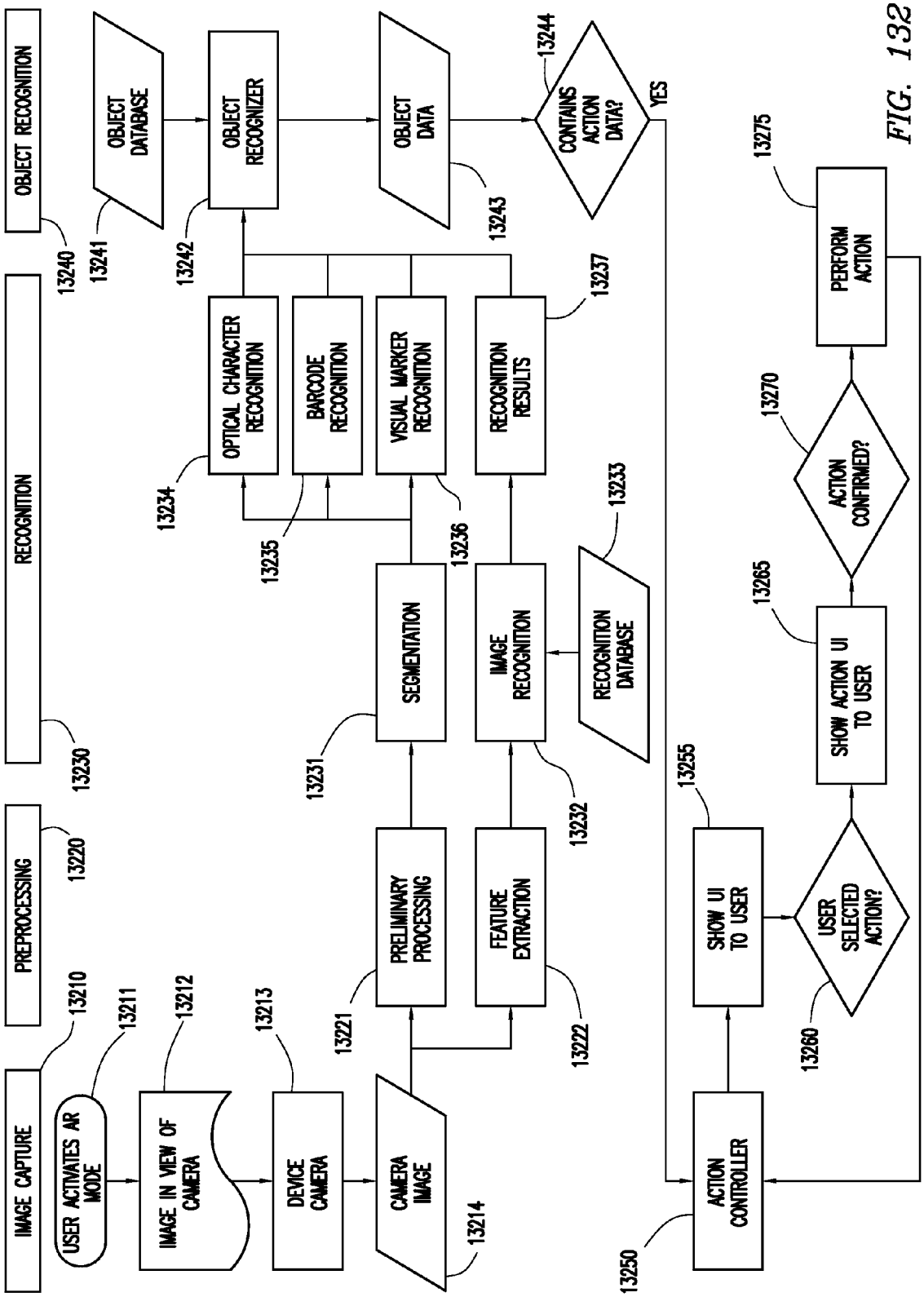
IMAGE CAPTURE
PREPROCESSING
RECOGNITION
OBJECT RECOGNITION
13210
13211
13212
13213
13214
13220
13221
13222
13230
13231
13232
13233
13234
13235
13236
13237
13240
13241
13242
13243
13244
13250
13255
13260
13265
13270
13275
USER ACTIVATES AR MODE
IMAGE IN VIEW OF CAMERA
DEVICE CAMERA
CAMERA IMAGE
PRELIMINARY PROCESSING
FEATURE EXTRACTION
SEGMENTATION
IMAGE RECOGNITION
RECOGNITION DATABASE
OPTICAL CHARACTER RECOGNITION
BARCODE RECOGNITION
VISUAL MARKER RECOGNITION
RECOGNITION RESULTS
OBJECT DATABASE
OBJECT RECOGNIZER
OBJECT DATA
CONTAINS ACTION DATA?
YES
ACTION CONTROLLER
SHOW UI TO USER
USER SELECTED ACTION?
SHOW ACTION UI TO USER
ACTION CONFIRMED?
PERFORM ACTION

FIG. 132

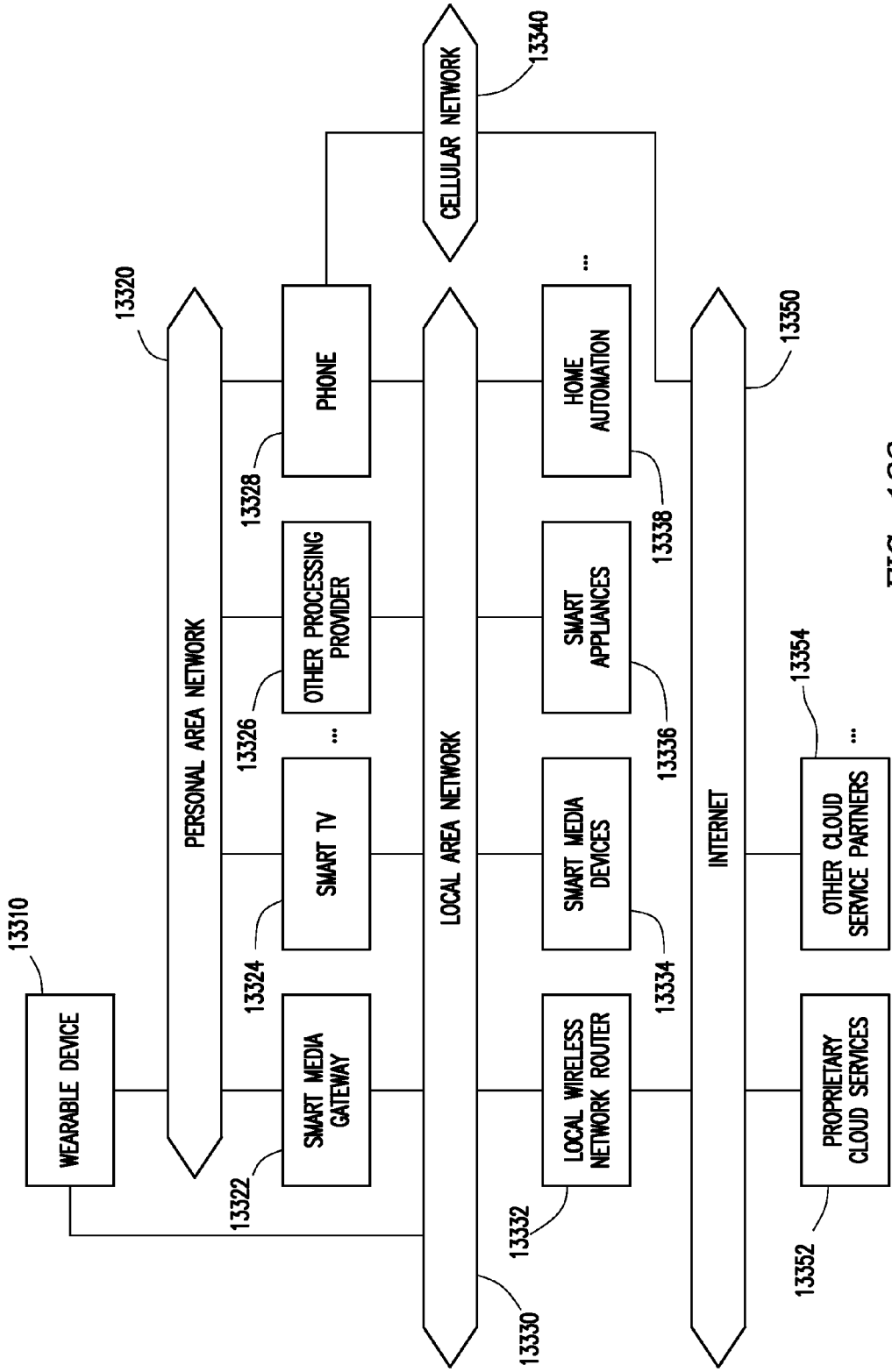
13310
WEARABLE DEVICE
13320
PERSONAL AREA NETWORK
13322
SMART MEDIA GATEWAY
13324
SMART TV
...
13326
OTHER PROCESSING PROVIDER
13328
PHONE
CELLULAR NETWORK
13340
13330
LOCAL AREA NETWORK
13332
LOCAL WIRELESS NETWORK ROUTER
13334
SMART MEDIA DEVICES
13336
SMART APPLIANCES
13338
HOME AUTOMATION
...
13350
INTERNET
13352
PROPRIETARY CLOUD SERVICES
13354
OTHER CLOUD SERVICE PARTNERS
...

FIG. 133

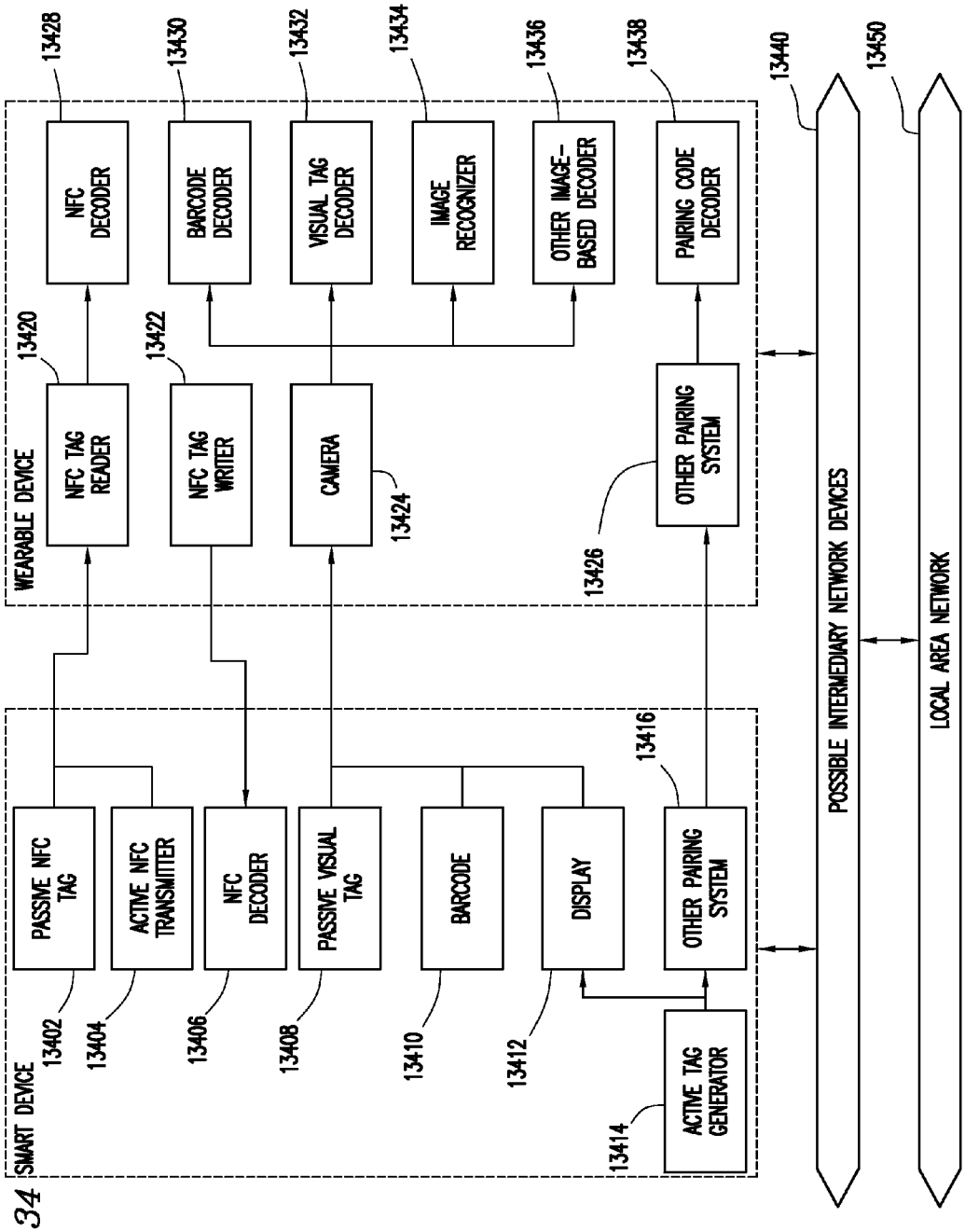
SMART DEVICE
WEARABLE DEVICE
PASSIVE NFC TAG
ACTIVE NFC TRANSMITTER
NFC DECODER
PASSIVE VISUAL TAG
BARCODE
DISPLAY
OTHER PAIRING SYSTEM
ACTIVE TAG GENERATOR
NFC TAG READER
NFC TAG WRITER
CAMERA
OTHER PAIRING SYSTEM
NFC DECODER
BARCODE DECODER
VISUAL TAG DECODER
IMAGE RECOGNIZER
OTHER IMAGE-BASED DECODER
PAIRING CODE DECODER
POSSIBLE INTERMEDIARY NETWORK DEVICES
LOCAL AREA NETWORK
13402
13404
13406
13408
13410
13412
13414
13416
13420
13422
13424
13426
13428
13430
13432
13434
13436
13438
13440
13450

FIG. 134

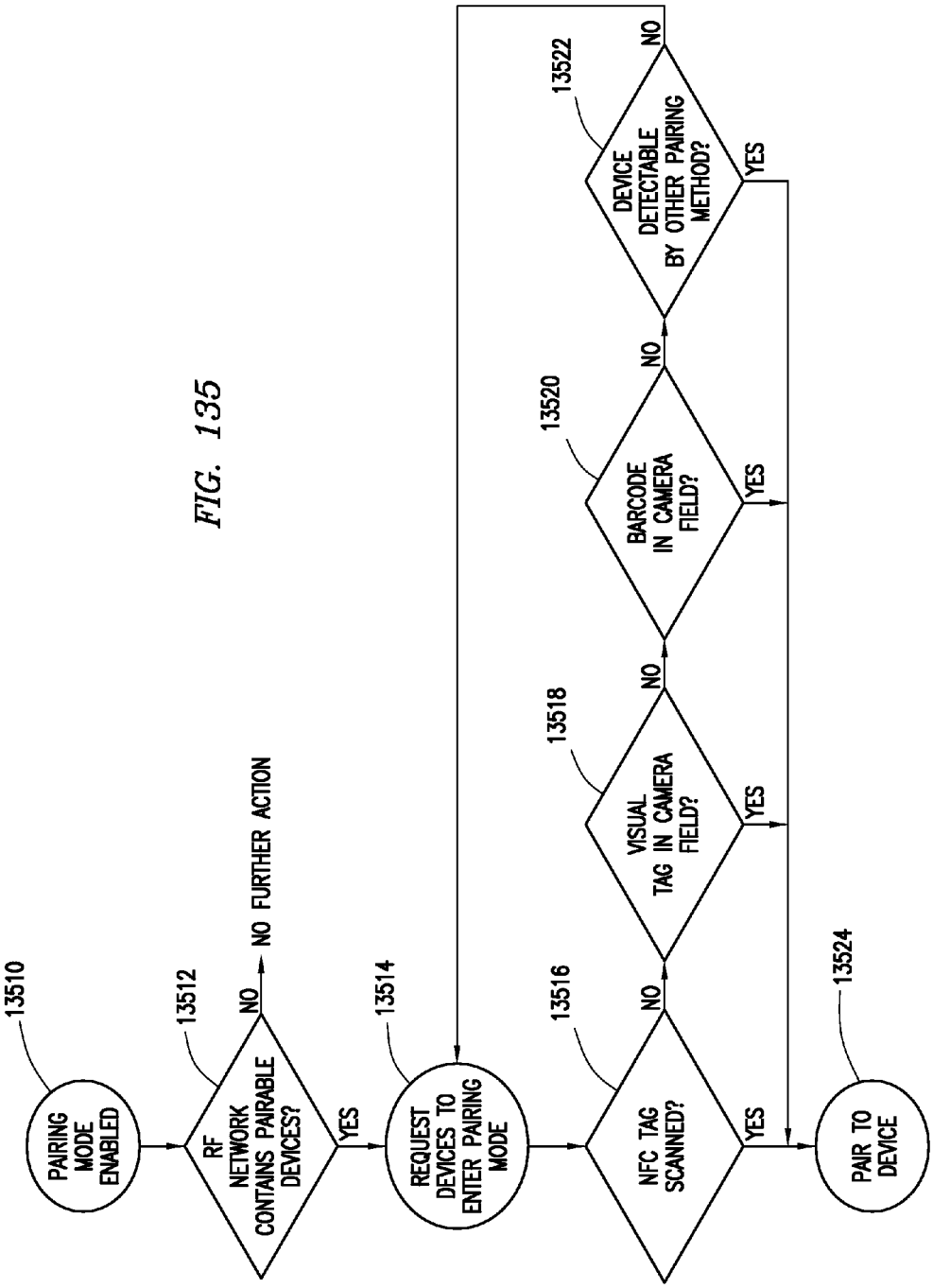
13510
PAIRING MODE ENABLED
13512
RF NETWORK CONTAINS PAIRABLE DEVICES?
NO
NO FURTHER ACTION
YES
13514
REQUEST DEVICES TO ENTER PAIRING MODE
13516
NFC TAG SCANNED?
NO
YES
13518
VISUAL TAG IN CAMERA FIELD?
NO
YES
13520
BARCODE IN CAMERA FIELD?
NO
YES
13522
DEVICE DETECTABLE BY OTHER PAIRING METHOD?
NO
YES
13524
PAIR TO DEVICE

FIG. 135

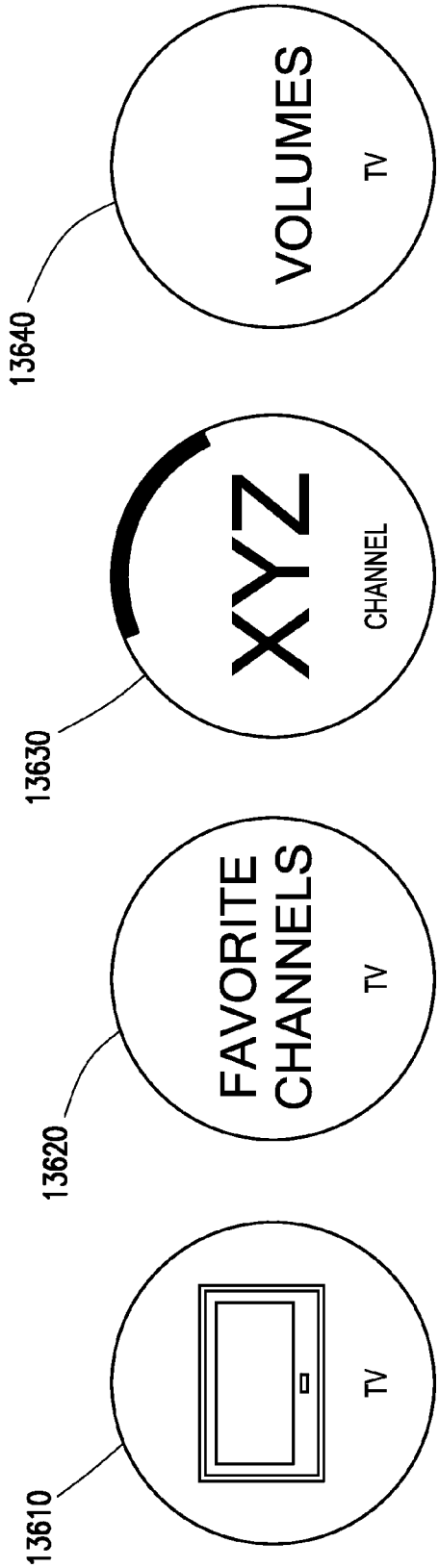
13610
TV
13620
FAVORITE CHANNELS
TV
13630
XYZ
CHANNEL
13640
VOLUMES
TV

FIG. 136

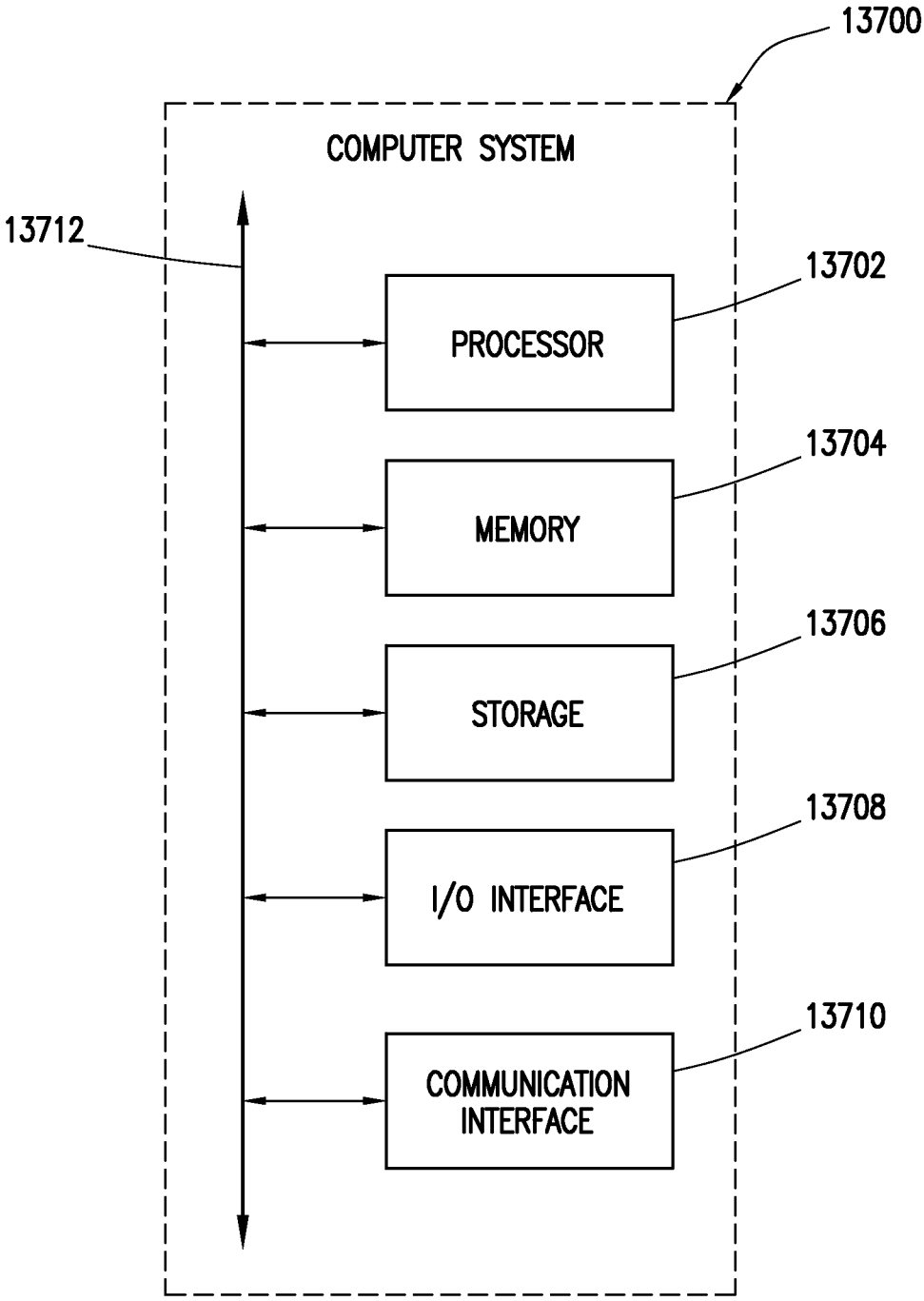
13700
COMPUTER SYSTEM
13712
13702
PROCESSOR
13704
MEMORY
13706
STORAGE
13708
I/O INTERFACE
13710
COMMUNICATION INTERFACE

FIG. 137

USER GESTURE INPUT TO WEARABLE ELECTRONIC DEVICE INVOLVING OUTWARD-FACING SENSOR OF DEVICE

PRIORITY

[0001] This application claims the benefit, under 35 U.S.C. §119(e), of U.S. Provisional Patent Application No. 61/728,765, filed 20 Nov. 2012, U.S. Provisional Patent Application No. 61/728,770, filed 20 Nov. 2012, U.S. Provisional Patent Application No. 61/773,803, filed 6 Mar. 2013, U.S. Provisional Patent Application No. 61/728,773, filed 20 Nov. 2012, U.S. Provisional Patent Application No. 61/773,813, filed 7 Mar. 2013, U.S. Provisional Patent Application No. 61/773,815, filed 7 Mar. 2013, U.S. Provisional Patent Application No. 61/773,817, filed 7 Mar. 2013, U.S. Provisional Patent Application No. 61/775,688, filed 11 Mar. 2013, U.S. Provisional Patent Application No. 61/775,687, filed 11 Mar. 2013, and U.S. Provisional Patent Application No. 61/775,686, filed 11 Mar. 2013, which are all incorporated herein by reference.

TECHNICAL FIELD

[0002] This disclosure generally relates to an wearable electronic device.

BACKGROUND

[0003] Mobile electronic devices provide a user with access to computing capabilities even as the user moves about various locations. Examples of mobile electronic devices include mobile phones, media players, laptops, tablets, PDAs, or hybrid devices that include functionality of multiple devices of this type.

[0004] Mobile electronic devices may be part of a communication network such as a local area network, wide area network, cellular network, the Internet, or any other suitable network. A mobile electronic device may use a communication network to communicate with other electronic devices, for example, to access remotely-stored data, access remote processing power, access remote displays, provide locally-stored data, provide local processing power, or provide access to local displays. For example, networks may provide communication paths and links to servers, which may host applications, content, and services that may be accessed or utilized by users via mobile electronic devices. The content may include text, video data, audio data, user settings or other types of data. Networks may use any suitable communication protocol or technology to facilitate communication between mobile electronic devices, such as, for example, BLUETOOTH, IEEE WI-FI (802.11a/b/g/n/ac), or TCP/IP.

BRIEF DESCRIPTION OF THE DRAWINGS

[0005] FIG. **1** illustrates an example embodiment of an wearable electronic device.

[0006] FIG. **2** illustrates an example stack-up of a device.

[0007] FIGS. **3**A-**3**E illustrate example form factors of a device.

[0008] FIG. **4**A illustrates an example cross-section of a device body.

[0009] FIGS. **4**B-C illustrate example connections between components of a device.

[0010] FIGS. **5**A-**5**F illustrate example displays of a device.

[0011] FIGS. **6**A-C illustrate example cross-sectional views of a device display.

[0012] FIGS. **7**A-**7**D illustrate example outer elements about a device body.

[0013] FIGS. **8**A-**8**C illustrate example outer elements about a device body.

[0014] FIG. **9** illustrates an example sealing ring of a device.

[0015] FIG. **10** illustrates an example retention ring of a device.

[0016] FIG. **11** illustrates various example embodiments for wearing a device.

[0017] FIGS. **12**A-**12**B illustrate a band attached to a body of a device.

[0018] FIGS. **13**A-**13**I illustrate example embodiments for fastening or affixing a band of a device.

[0019] FIGS. **14**A-D illustrate example camera placements on a device.

[0020] FIG. **15** illustrates an example device with a band and optical sensor.

[0021] FIG. **16** illustrates an example viewing triangle including a user, a device, and an object.

[0022] FIG. **17** illustrates an example angle of view for an optical sensor of a device.

[0023] FIGS. **18**A-**18**B illustrate example optical sensors of a device.

[0024] FIG. **19** illustrates an example sensor detection system of a device.

[0025] FIGS. **20**A-**20**C illustrate example chargers operable with a device.

[0026] FIGS. **21**A-**21**B illustrate example chargers operable with a device.

[0027] FIGS. **22**A-**22**B illustrate example charging units operable with a device.

[0028] FIG. **23** illustrates an example charging scheme for a charging unit operable with a device.

[0029] FIG. **24** illustrates an example charging scheme for a charging unit operable with a device.

[0030] FIGS. **25**A-**25**E illustrate example embodiments of energy storage and charging in a device and a charging unit.

[0031] FIG. **26** illustrates an example charging unit architecture.

[0032] FIGS. **27**-**92** illustrate example gestures for use with a device.

[0033] FIGS. **93**A-**93**B illustrate example user inputs to a device.

[0034] FIGS. **94**A-**94**C illustrate example user inputs to a device.

[0035] FIGS. **95**A-**95**D illustrate example user touch input to a device.

[0036] FIGS. **96**A-**96**B illustrate example graphical user interface models of a device.

[0037] FIG. **97** illustrates an example graphical user interface model of a device.

[0038] FIGS. **98**A-**98**G illustrate example graphical user interface models of a device.

[0039] FIG. **99** illustrates an example graphical user interface model of a device.

[0040] FIGS. **100**A-**100**C illustrate example graphical user interface models of a device.

[0041] FIGS. **101**A-**101**B illustrate example screens of a graphical user interface of a device.

[0042] FIGS. **102**A-**102**D illustrate example screens of a graphical user interface of a device.

[0043] FIGS. **103**A-**103**D illustrate example screens of a graphical user interface of a device.

[0044] FIG. **104** illustrates an example menu of a graphical user interface of a device.

[0045] FIGS. **105**A-**105**D illustrate example menus of a graphical user interface of a device.

[0046] FIGS. **106**A-**106**C illustrate example menus of a graphical user interface of a device.

[0047] FIGS. **107**A-**107**C illustrate example menus of a graphical user interface of a device.

[0048] FIG. **108** illustrates an example menu of a graphical user interface of a device.

[0049] FIGS. **109**A-**109**C illustrate example menus of a graphical user interface of a device.

[0050] FIGS. **110**A-**110**B illustrate examples of scrolling in a graphical user interface of a device.

[0051] FIG. **111**A-**111**C illustrate examples of scrolling in a graphical user interface of a device.

[0052] FIG. **112** illustrates examples of overlay and background content in a graphical user interface of a device.

[0053] FIGS. **113**A-C illustrate examples of overlay and background content in a graphical user interface of a device.

[0054] FIGS. **114**A-**114**B illustrate example visual transition effects in a graphical user interface of a device.

[0055] FIGS. **115**A-**115**B illustrate example visual transition effects in a graphical user interface of a device.

[0056] FIGS. **116**A-**116**B illustrate example visual transition effects in a graphical user interface of a device.

[0057] FIGS. **117**A-**117**B illustrate example visual transition effects in a graphical user interface of a device.

[0058] FIGS. **118**A-**118**C illustrate example visual transition effects in a graphical user interface of a device.

[0059] FIGS. **119**A-**119**C illustrate example visual transition effects in a graphical user interface of a device.

[0060] FIGS. **120**A-**120**C illustrate example visual transition effects in a graphical user interface of a device.

[0061] FIGS. **121**A-**121**B illustrate example visual transition effects in a graphical user interface of a device.

[0062] FIG. **122** illustrates an example use of a physical model in a graphical user interface of a device.

[0063] FIG. **123** illustrates example screens of a graphical user interface of a device.

[0064] FIG. **124** illustrates example screens of a graphical user interface of a device.

[0065] FIG. **125** illustrates an example method for automatic camera activation in a device.

[0066] FIG. **126** illustrates an example method for delegation by a device.

[0067] FIG. **127** illustrates example delegation models including a device.

[0068] FIG. **128** illustrates an example method for delegating by a device.

[0069] FIGS. **129**A-**129**D illustrate example modes of a device.

[0070] FIG. **130** illustrates an example mode of a device.

[0071] FIGS. **131**A-**131**D illustrate example modes of a device.

[0072] FIG. **132** illustrates an example method for providing augmented reality functions on a device.

[0073] FIG. **133** illustrates an example network environment in which a device may operate.

[0074] FIG. **134** illustrates an example of pairing between a device and a target device.

[0075] FIG. **135** illustrates an example method for pairing a device with a target device.

[0076] FIG. **136** illustrates example screens of a graphical user interface of a device.

[0077] FIG. **137** illustrates an example computer system comprising a device.

DESCRIPTION OF EXAMPLE EMBODIMENTS

[0078] FIG. **1** illustrates an example embodiment of an wearable electronic device **100**. Device **100** includes a body **105** containing all or some of the circuitry, structure, and display of device **100**. For example, body **105** may include all or some of the processing components, data storage components, memory, sensors, wiring, or communication components of device **100**. In particular embodiments, device **100** may include a display. The display may take any suitable form or shape, such as for example a circular shape, as illustrated by circular display **110**. As used herein, where appropriate, "circular display" includes substantially circular displays or circular-like displays, such as for example elliptical displays. In particular embodiments, device **100** may include an element about the display. As used herein, an element about the display includes a rotatable element encircling the display or the body on or in which the display sits. As an example, an element may be an outer ring **115** about a circular display **110**. In particular embodiments, the element about the display may move relative to the display or body. For example, outer ring **115** may rotate relative to the body of device **100**, as described more fully below. In particular embodiments, device **100** may include a band **120** attached to body **105**. In particular embodiments, device **100** may include a sensor module, such as for example camera module **125** housing a camera, affixed in or to body **105** or band **125**, as described more fully below.

[0079] Particular embodiments of an wearable electronic device include a stack-up that allows some or all of the processing and display system to fit inside the body of the device, which may be encompassed by an element, such as an outer ring, that provides at least one way for the user to interact with the device. In addition or the alternative, particular embodiments may include external components incorporated into the band for additional functionality, as described more fully herein. FIG. **2** illustrates an example stack-up **200** of an wearable electronic device. As illustrated in FIG. **2**, some or all of the components of stack-up **200** may adopt the form of the device, which is circular in the example of FIG. **2**. Stack-up **200** may include a layer of protective glass (or other suitable transparent, solid material) **205**. Other components may be laminated to protective glass **205**, or be attached to base **245**. In addition or the alternative, protective layer **205** may be mechanically connected to outer ring **235**, or any other suitable component of the body of the device. Directly beneath protective glass **205** may be a touch-sensitive layer **210**. Touch-sensitive layer **210** may be composed of any suitable material and be of any suitable type, such as for example resistive, surface acoustic wave, capacitive (including mutual capacitive or self-capacitive), infrared, optical, dispersive, or any other suitable type. Touch-sensitive layer **210** may be applied directly to protective glass **205**, laminated onto it, or physically affixed to. Touch-sensitive layer **210** may be a fully two-dimensional touch surface, or may be composed of touch-sensitive regions, such as a number of capacitive buttons or areas. Touch-sensitive layer **210** may be connected to processor board **215** via a flexible connector at the edge of the touch surface, as described more fully herein

[0080] Below the touch-sensitive layer **210** may be a circular display **215**, which may be laminated or mechanically

affixed to any of the preceding or forgoing layers. In particular embodiments, lamination may reduce glare and improve display legibility by reducing internal reflections. As described more fully below, display **215** may have an outer inactive area that may be symmetric or asymmetric. Display **215** may be positioned such that it is axially centered relative to protective layer **205** for a visually symmetric presentation. Display **215** may be of any suitable type, such as for example light-emitting diode (LED), organic light emitting diode (OLED), or liquid crystal display (LCD). In particular embodiments, display **215** may be flexible. In particular embodiments, display **215** may be partially transparent. In particular embodiments, display **215** may be translucent.

[0081] Below display **215** may be battery **220**, which in particular embodiments may be positioned so that base **245** may be reduced in diameter without affecting the size of the battery. Battery **220** may be of any suitable type, such as for example lithium-ion based. Battery **220** may adopt the circular shape of the device, or may adopt any other suitable shape, such as a rectangular form, as illustrated. In particular embodiments, battery **220** may "float" in the device, e.g. may have space above, below, or around the battery to accommodate thermal expansion. In particular embodiments, high-height components such as for example haptic actuators or other electronics may be positioned in the additional space beyond the edge of the battery for optimal packing of components. In particular embodiments, connectors from processor board **225** may be placed in this space to reduce the overall height of the device.

[0082] Below battery **220** may be processor board **225**. Processor board **225** may include any suitable processing components, such as for example one or more processing units, drive units, sense units, caches, memory elements, or integrated circuits. Processor board **225** may include one or more heat sensors or cooling units (such as e.g., fans) for monitoring and controlling the temperature of one or more processor board components. In particular embodiments, body **105** of the device may itself act as the heat sink

[0083] Below the processor board may be an encoder **230**, encircled by one or more outer rings **235**. As described more fully below, encoder **230** may be of any suitable type, and may be part of outer ring **235** or may be a separate component, as illustrated in FIG. **2**. In particular embodiments, outer ring **235** may provide the haptic feel of the detent of the outer ring or position sensing of the outer ring **235**. When encoder **230** is a mechanical encoder separate from the device body, as illustrated in FIG. **2**, the encoder may support the outer ring **235**. For example, in particular embodiments encoder **230** is mounted to base **245**, and the connections to base **245** or to band **240** may pass through some portion of the encoder, such as, for example, the center of the encoder. In particular embodiments, processor board **225** and one or more layers above may be attached to a central post passing through encoder **235**. The post may transfer mechanical forces on components of the device to the post, which may allow components such as the processor board and the display to be supported by the post rather than by the encoder, reducing strain on the encoder. In particular embodiments, outer ring **235** attaches to the moveable portion of the encoder via prongs or other suitable connections.

[0084] The device body may conclude with a base **245**. Base **245** may be stationary relative to the one or more rotatable components of the device, such as outer ring **235**. In particular embodiments, base **245** connects to band **240**, described more fully herein. Connections may be mechanical or electrical, such as for example part of the circuitry linking wired communication components in band **240** to processing board **225**. In particular embodiments, connectors are positioned to avoid the encoder and the anchor points for the bands. In particular embodiments, band **240** may be detachable from base **245**. As described more fully herein, band **240** may include one or more inner connectors **250**, one or more optical sensing modules **255**, or one or more other sensors. In particular embodiments, the interior of the device, or portions of that interior, may be sealed from the external environment.

[0085] While this disclosure describes specific examples of components in stack-up **200** of wearable electronic device **100** and of the shape, size, order, connections, and functionality of those components, this disclosure contemplates that a wearable device, such as device **100**, may include any suitable components of any suitable shape, size, and order connected or communicating in any suitable way. As merely one example, battery **220** may be placed more toward the bottom of the stack up than is illustrated in FIG. **2**. As another example, the body of the device may take any suitable form factor, such as elliptoid or disc-like as illustrated by the example of FIG. **3**A, tapered on one end as illustrated by the example of FIG. **3**B, or beveled or rounded at one or more edges as illustrated by the example of FIGS. **3**C-**3**D illustrating beveled edge **315**. FIG. **3**E illustrates additional example form factors of the device body, such as for example bodies **320**A-E having a polygonal shape with a flat protective covering or display or a curved protective covering or display. As another example, bodies **325**A-D have a partially-curved shape with a flat protective covering or display or a curved protective covering or display. Bodies **330**A-C have a curved shape. One or more internal components of the device body, such as for example one or more internal components, may take any form factor suitable for the body in which they sit.

[0086] FIG. **4**A illustrates an example cross section of a device body. As illustrated, the device body has a width of D1, such as for example approximately 43 millimeters. Particular embodiments may include a slight gap D4 between the outer ring and the OLED display, such as for example a gap of up to 0.3 millimeters. Likewise, there may also be a distance between the outer ring and a glass protective covering (which may have a width D3, such as for example approximately 42.6 millimeters), such as for example 0.2 millimeters. In particular embodiments, the gap between the glass protective covering and the outer ring is greater than the gap between the display and the outer ring. The outer ring (which may include serration) may have a width D2 of, for example, 1.0 millimeter. FIGS. **4**B-**4**C illustrate example set of connections between components of the device. FIG. **4**B illustrates a touch glass **405** above a display **410**. The display is attached to the top of inner body **440** with, for example, adhesive sealant **425**. Display flexible printed circuit **430** couples the display to the electronics within the device body. Adhesive sealing membrane **445** may be used to connect band **450** to the device, and one or more retention rings **435** may be used to connect outer ring **415** to the inner body **440**. In particular embodiments, the retention rings may inhibit twisting of the outer ring on its vertical axis and provide physical spacing between the outer ring and the glass covering. A layer of protective glass may sit on the top of the inner body, providing an environmental seal. In particular embodiments, a retention ring may also provide an environmental seal for the inner body. For example, FIG. **5**C illustrates an example retention ring **465** attaching an

outer ring to the device body and provides an environmental seal between the outer ring and the inner body. In addition or the alternative, flock-type material, possibly coated with a hydrophobe such as, for example, TEFLON, may be used to prevent water and dirt intrusion into the cavity. As another example, the outer ring may be sealed to the inner body with a ring of metal or plastic, preventing air (and thus water vapor or other particles) from moving through the cavity between the outer ring and the inner body. Gap **455** allows the outer ring to move, such as for example by rotation, relative to the inner device body. Adhesive sealant **460** attaches the display to the body and provides an environmental seal between the display and components of the inner body.

[0087] In particular embodiments, the display of the device has a circular or elliptical form, and houses a circular display unit, such as for example an LCD display, and an OLED display. The display unit may be mounted such that the visible area is centrally located within the display module. Should the display unit have an offset design, one or more appropriate maskings may be used to obscure part of the display to produce a circular and correctly placed visual outline.

[0088] In particular embodiments, a display module has an outer ring that is part of the user interface of the device. The outer ring may rotate while the band holds the bottom and inside part of the device stable. FIG. **5**A illustrates an example of a top-view of the device's display relative to other device components. Outer ring **510** may be attached to the front surface **512** of device **508**, or it may be independent of front surface **512**. In particular embodiments, display **506** does not rotate regardless of rotation of outer ring **510** surrounding display **506**. That may be achieved by attaching display **506** to the portion **504** of display module that is affixed to band **502**, or by programming displayed content to remain static while the display unit rotates. In the latter case, displayed content is rotated such that the visual vertical axis of the image displayed by the display unit remains parallel to the band at all times.

[0089] A display module may additionally incorporate one or more sensors on or near the same surface as the display. For example, the display module may include a camera or other optical sensor, microphone, or antenna. One or more sensors may be placed in an inactive area or of the display. For example, FIG. **5**B illustrates device **522** with a camera module **516** placed coplanar with the battery below display **520**, with optical opening **514** positioned under the clear section of display **520**. Camera module **516** may be placed between gird line connectors **518** for display **520**. Any camera or other suitable sensors may be placed coplanar with the display, such as antenna **524** of FIG. **5**C, which is placed is inactive area **526**. In addition or the alternative, sensors may be placed below or above the display, may be placed in any suitable location in or on the outer body of the device, may be placed in any suitable location in or in the band of a device, or any suitable combination thereof, as described more fully herein. For example, a front-facing-camera maybe placed under the display, on the display, or above the display.

[0090] In particular embodiments, the packaging of a circular display includes an inactive area, as illustrated in FIG. **5**D. In a traditional display, row drive lines powering the display are routed to the nearest lateral edge, then either routed down along the inactive areas, or connected directly to the driver integrated chips along that edge. A number of approaches may be taken to reduce the amount of inactive area for the display. For example, particular embodiments reduce the size of the inactive area by rerouting grid control lines powering the display to one edge of the display. FIG. **5**D illustrates grid control lines **532** routed to one edge of display **536** and connected to a connector **538** routing the lines to the processing center of device **528**. In that configuration, inactive area **530** may be minimized.

[0091] FIG. **5**E illustrates another example embodiments for reducing the inactive area of a display **554** of device **540** by creating a polygonal-type display outline, with a circular area masked in the center by one or more masks **550**. Connectors **552** are arranged in a polygonal design. Rows **546** and columns **542** of grid lines are routed to the nearest connector **552**. In particular embodiments, connectors **552** connect to a flexible circuit behind the display that carries the driver chip. Due to the reduced density of connection, the electronics of FIG. **5**E may be easier to connect to a flexible printed circuit board (FPC board) and thus increases yield. In addition, by moving the driver integrated circuit to the back of the display, one or more inactive areas **548** can be further reduced while allowing the integrated circuit to remain on a stable and flat surface. This design is particularly suited to OLED displays, but may be used with LCDs, given that a backlight unit (BLU) may be laminated on to the device before the FPC board is connected. While the above example illustrates a polygonal arrangement of connectors, any suitable arrangement of connectors may be used as long as all pixels are reached by grid lines.

[0092] FIG. **5**F illustrates an example physical arrangement and sizing of a display of a device. The device has a diameter of D4, such as for example approximately 41.1 millimeters. The device includes one or more inactive areas having a width D3, such as for example approximately 1.55 millimeters. The device includes a visible area with a diameter D2, such as for example approximately 38 millimeters. The device includes connectors **568** for column lines **564** and row lines **566**. Connectors **568** may be coupled to the device by one or more FPC bonds **570**, which have a width of D1, such as for example approximately 0.2 millimeters. Connectors **568** may have a width D5, such as for example approximately 6 millimeters. Display connector FPC **556** may be used to connected the electronics of the display, such as for example circuitry from connectors **568**, to driver chip **558**, which may be below the display or on the back of the device body.

[0093] FIGS. **6**A-C illustrate example cross-sectional views of a device display, including manufacturing of the device. In FIG. **6**A, hotbar knife **605** is used to solder the flexible printed circuit(s) **610** coupling the electronics of the display to processing electronics of the device. A support **615** may be used to stabilize the FPC **610** during this process. FIG. **6**B illustrates the connected FPC **620**, which has been folded over (portion **625**) and glued to the back of the display using adhesive **630**. FIG. **6**C illustrates an example finished display. FPC **645** has been laminated to the back of protective display glass **635**, and is bent over the front of glass **635** and is attached to the front of glass **635** via microbond **649**. Adhesive **650** connects the FPC **645** to the device. The FPC pass over driver chip **655**, which is connected to device by adhesive **650**.

[0094] In particular embodiments, all processing and RF components are located within the body of the device, which may create a challenge in allowing RF signals to pass out of the device. The FPC board may additionally be attached to sides of the polygon where there is no connection to the

display itself to allow the mounting of strip line, stub, ceramic, or other antennae (or other suitable sensors) in the same plane as the display, as illustrated in FIG. **5**C. As the antenna of FIG. **5**C is coplanar with the display, interference from the dense mesh of wiring (e.g. as illustrated in FIG. **5**E) from the display is reduced.

[0095] In particular embodiments, a display may be shielded from electromagnetic interference with the main processor board using a metal shield. In particular embodiments, the metal shield may also be used as a heat sink for the battery, and thus may improve charge or discharge rates for the battery.

[0096] In particular embodiments, an wearable electronic device may include one or more outer elements (which may be of any suitable shape) about the device body. FIG. **7**A illustrates an outer element by an example outer ring **710** about a display **705**. Outer ring may be composed of any suitable material, such as for example stainless steel or aluminum. In particular embodiments, outer ring **710** may be rotatable in one direction, both directions, or may be used in both configurations based on e.g. a switch. In particular embodiments, one outer ring **710** may rotate in one direction while a second outer ring **710** rotates in the opposite direction. Outer ring **710** may be coupled to base **720** of the device by a retention ring **715**. FIG. **7**B illustrates outer ring **710** attached to base **720** either by a Delrin ring **715**A or by a sprint steel retention ring **715**B. Springs or clips **725** affix the rings to base **720**. FIGS. **7**C-D illustrate retention ring **715** affixed to base **720** via screws **725** screwed into corresponding posts of base **720**. The device may include fasteners/spacers **730**, as illustrated in FIG. **7**C.

[0097] In particular embodiments, detents or encoders (which may be used interchangeably, where suitable) of an outer element may provide a user with haptic feedback (e.g. a tactile click) provided by, for example, a detent that allows the user to determine when the element has been moved one "step" or "increment", which may be used interchangeably herein. This click may be produced directly via a mechanical linkage (e.g. a spring mechanism) or may be produced electronically via a haptic actuator (e.g. a motor or piezo actuator). For example, a motor may provide resistance to motion of a ring, such as for example by being shorted to provide resistance and unshorted to provide less resistance, simulating the relative high and low torque provided by a mechanical detent system. As another example, magnetic systems may be used to provide the haptic feel of a detent. For example, a solenoid mechanism may be used to disengage the detent spring or escapement as needed. The spring or escapement provides the actual mechanical feedback. However, this arrangement allows the device to skip a number of détentes as needed, while re-engaging the detent at exact intervals to create the sensation of detents, such as those that have changed size. As another example, a rotatable outer element (such as, for example, the outer ring) may be magnetized, such as by an electromagnetic used to attract the ring at "detent" positions, increasing torque and simulating detent feedback. As another example, a rotatable outer element may have alternating north-south poles, which repels and attracts corresponding magnetic poles in the device body. As another example, a permanent magnet may be used to lock the ring in place when the electromagnet is not in use, preventing free-wheeling. As another example, instead of an electromagnet, an easily-magnetizable ferromagnetic alloy may be used within a solenoid. This allows the electromagnetic field of the solenoid to "reprogram" the magnetic orientation of the core, thus maintaining the effect of the magnetic actuation even when the solenoid itself is disengaged. While this disclosure provides specific examples of detents, detent-like systems, and encoders, this disclosure contemplates any suitable detents, detent-like systems, or encoders.

[0098] FIG. **8**A illustrates an outer ring **805** with notches for a spring-based detent system etched onto the inner surface of outer ring **805**. Springs **820** attached to spring posts **810**. Retention ring **815** may be made of Delrin, steel, or any other suitable material, and may be segmented or solid/continuous. FIG. **8**B illustrates an example outer ring having small notches **830** that engage a spring-loaded element to provide haptic feedback from the illustrated detent. In the case of an electronic feedback system, the feedback may be produced in rapid synchrony with the motion of the ring, and must have a sufficient attack and decay rate such that successive movements of the ring are distinguishable from each other. In particular embodiments, an outer ring may be freely (e.g. continuously) rotatable, without any clicking or stepping. In particular embodiments, a ring may be capable of both continuously rotating and rotating in steps/increments, based on, for example, input from a user indicating which rotational mode the outer ring should be in. The ring may also or in the alternative rotate freely in one direction and in increments in the other. Different functionality may occur based on the rotational mode used. For example, rotating in continuous mode may change a continuous parameter, such as e.g. volume or zooming, while rotation in incremental mode may change a discrete parameter, such as e.g. menu items or contacts in a list, as described more fully herein. In particular embodiments, when rotating freely the ring may provide haptic feedback to the user, for example a force applied such that the ring appears to rotate in viscous media (e.g. the more quickly the ring is rotate the more it resists rotation). In particular embodiments, an outer ring may be depressed or raised in the direction of the axis the outer ring rotates about, such as for example as part of a gesture or to change rotational modes. In particular embodiments, an outer ring may have touch-sensitive portions.

[0099] In particular embodiments, an encoder or detent may be used to determine the position of the outer ring relative to the device body. Particular embodiments utilize an encoder that is affixed to the device body, as illustrated by encoder **230** of FIG. **2**. In particular embodiments, the encoder is part of the inner surface of the outer ring itself, as illustrated by printed optical elements **825** in FIG. **8**B. In those embodiments, the outer ring acts as the rotating part of the encoder directly. An optical encoder pattern is printed onto the inner surface, and is read out by an optical module on the processing board. The encoder on the interior of the outer ring should have sufficient optical contrast for detectors, and may be etched on the outer ring via e.g. printing or laser-etching. The inner and outer rings may be environmentally sealed with a low-friction ring (such as for example, ring **840** of FIG. **8**C) made of a material such as Teflon or Delrin that maintains a tight fit while preventing contaminants from entering the inner part of the device. In particular embodiments, a lip on the inner ring may engage a similar lip on the outer ring, allowing the two rings to be joined while still allowing free rotation. A larger lip at the bottom of the inner ring provides further sealing by deflecting environmental hazards from below. As illustrated in FIG. **9**, in particular

embodiments, sealing ring **915** may fit into groove **905** of the base, which may include a grip area **910**.

[0100] In particular embodiments, a retention ring connecting the outer ring to the body of the device may have strain gages to detect pressure on the outer ring. As an example, FIG. **10** illustrates a retention ring connected to four strain gauges (which are also connected to the inner body) that are symmetrically placed around the ring. As used herein, the four strain gauges may be an electronic component detecting strain. As a result of the symmetric placing, normal motion or contact with the outer ring will place mostly asymmetric strain on the outer ring, because the ring merely moves relative to the device in the plane of the ring, and thus one end compresses and the opposite end elongates, as illustrated by the top ring of FIG. **10**. In contrast, squeezing a larger portion of the outer ring will likely produce a symmetric strain on opposite pairs of strain gauges (e.g. due to elongation of the ring under pressure). The relative difference in strain between the two pairs of strain gauges thus differentiates intentional squeezing of the outer ring from regular motion of or contact with the outer ring. While this disclosure describes specific examples of the number and placement of strain gauges in the retention ring, this disclosure contemplates placement of any suitable number of strain gauges in any suitable component of the device to detect pressure on the component. As one example, strain gauges may be placed on the band of the device or in the outer ring.

[0101] When strain is placed on a component containing strain gauges or any other suitable strain or pressure detection system, the detected strain may result in any suitable functionality. For example, when strain is placed on the outer ring, such as for example by a user squeezing the outer ring, feedback may be provided to the user. That feedback may take any suitable form, such as tactile feedback (e.g. vibration, shaking, or heating/cooling), auditory feedback such as beeping or playing a particular user-defined tone, visual feedback (e.g. by the display of the device), or any other suitable feedback or combination thereof. Functionality associated with squeezing a ring is described more fully herein, and this disclosure contemplates any suitable functionality resulting from strain or pressure placed on and detected by any suitable components.

[0102] An wearable electronic device may be attached to a band to affix the device to the user. Here, reference to a "band" may encompass any suitable apparatus for affixing a device to the user, such as for example a traditional band **1405** that can be worn around the arm, wrist, waist, or leg of the user, as illustrated by way of example in FIG. **14**A; a clip **1415** for affixing to a piece of clothing, as illustrated by way of example in FIG. **14**B; a necklace or bracelet **1420** configuration, as illustrated by way of example in FIG. **14**C; a keychain **1425** or other accessory configuration to secure the device, for example, in the user's pocket, as illustrated by way of example in FIG. **14**D; or any other suitable configuration. Each of those embodiments may include a camera **1410** located on the device, on the band, or on the body. FIG. **11** illustrates various embodiments for wearing the device, such as for example around a neck as illustrated in **1105**; pinned to clothing (such as, for example, the chest as illustrated by **1110**); on a belt as illustrated in **115**; on an appendage (such as, for example, an arm as illustrated in **1120**); on the wrist as illustrated in **1125**, or in a pocket as illustrated in **1130**. While this disclosure describes specific examples of bands and ways of affixing devices to a user, this disclosure contemplates any suitable bands or ways of affixing a device to a user.

[0103] In particular embodiments, sensors and corresponding electronics may be attached to a band, where appropriate. For example, the bands of FIGS. **14**A-**14**C may be suitable for housing an optical sensor. All illustrated, particular embodiments may be suited for including a touch-sensitive area. This disclosure contemplates any suitable bands including any suitable sensors or electronics, such as for example communication components (such as antennae), environmental sensors, or inertial sensors. In particular embodiments, the band may be detachable from the device, and may communicate remotely with the device when not attached to the device. In particular embodiments, wiring associated with electrical components in the band may also be housed in the band, for example to minimize the volume of the device or to minimize electromagnetic interference with internal device components. For example, devices that may cause high levels of internal EMI (for example, camera or communication systems), that may require additional volume (for example, battery or speaker), that may require the environmental seal of the main body (for example, power/data connector), or that may require additional contact with the skin of the user (for example, biometric sensors) may benefit by housing at least some of electronics in a band of the device. In particular embodiments, when wiring is contained in a band, a display module may be attached to the band such that electronic connections made to or via the band do not twist when the outer ring is rotated. The module may use a connector that is user-removable, such that the display module or device body can be removed and attached by the user at will. As an example attachment of a band to a device, a band **1215** as illustrated in FIG. **12**A may be attached to the body by being placed over one or more posts **1205** and then affixed to those posts using fasteners (e.g. screws) **1210**. In particular embodiments, in addition to fasteners and posts a retention plate **1215** may be used to secured the band to device **1225**, as illustrated in FIG. **12**B. This disclosure contemplates any suitable interface between the band and the device. For example, a USB interface may be provided between the band and the body of the device, to for example communicate data between the device and the band or components of the device and components of the band. In particular embodiments, an interface may enable a user of the device to easily detach, attach, or change the band of the device.

[0104] This disclosure contemplates any suitable structure for connecting a band as illustrated in FIG. **14**A to itself, for example when worn by a user. For example, FIG. **13**A illustrates example structures for fastening band **1305** having a camera module **1310** to a wearer of device **1300**. Fasteners may include one or more snaps **1315**, holes **1320** and **1335** and corresponding components, clasps **1340**, or clips **1325** with push buttons **1330**. FIG. **13**B illustrates an example mechanism for affixing band **1301** to a wearer using clips **1311** and **1303**. Components **1309** insert in the cavity on the other side of components **1307** to fasten band **1301**. FIG. **13**B further illustrates example internal mechanisms for clips **1303** and **1311**. Component **1317** of clip **1313** (corresponding to clip **1311**) may include one or more magnetic portions, which may be attracted to magnets in cavity **1323**. For example, component **1317** may include a magnetic portion at its outer edge, and a magnet of opposite polarity may be placed in front of spring **1319** to attract the magnet of component **1317**. Components **1317** may then fill cavity **1323**,

fastening clip **1313** to clip **1303** by coupling of the magnets. Once inserted, components **1321** may be used to engage springs **1319**, which force components **1317** out of cavity **1323**. Clip **1313** may be detached from clip **1303**. In addition to magnets on components **1317** and in cavity **1323**, magnets may also be placed within clip **1313**, for example to assist removal of clip **1313** when springs **1319** are engaged or to prevent components **1317** from sliding in and out of clip **1313** when not fastened to clip **1303**. For example, one or more magnets may be placed in the center of clip **1313** equidistant from components **1317** and in the same plane as components **1317**, attracting magnets of each component (and thus, the components themselves) toward the center of clip **1313**.

[0105] FIG. **13**C illustrates example structure for affixing a band **1327** using fasteners **1333** and **1331**, for example through the use of cavity **1329** and components **1337** and **1341**. FIG. **13**C illustrates the internal structure of fasteners **1331** and **1333**. Fasteners **1339** (corresponding to fastener **1333**) includes components **1337**. When fastener **1343** (corresponding to fastener **1331**) is inserted into fasteners **1339**, components **1341** attach to components **1337**, and may be secured by extending over a lip of fastener **1339**. When fastener **1339** is pulled upwards the lip increasingly forces components **1337** out, moving components **1341** past the lip of fastener **1339** and enabling fastener **1339** to be removed from fastener **1343**. In particular embodiments, magnets may be placed in or on fasteners **1333** and **1331** to fasten them together. For example, a magnet may be placed at the edge of each of component **1341** and **1337**. When fastener **1343** is brought into fastener **1337** (or vice versa) the magnets attract and secure component **1341** to component **1337**. In addition, a magnet may be placed in fastener **1343**, for example to assist removal of component **1341** from component **1337** or to prevent components **1341** from sliding in and out of fastener **1343** when not affixed to fastener **1339**. For example, one or more magnets may be placed in the center of fastener **1343** equidistant from components **1341** and in the same plane as components **1341**, attracting magnets at the end of each component (and thus, the components themselves) toward the center of fastener **1343**.

[0106] FIG. **13**D illustrates an alternative arrangement for affixing band **1351** using fasteners **1349** and **1353**. When affixed, fastener **1357** (corresponding to fastener **1353**) may be twisted, disengaging components **1359** (which may be rounded) from cavities **1363**, and enabling fastener **1361** (corresponding to fastener **1349**) to be removed from fastener **1357**, and vice versa. In particular embodiments, one or magnets may be used to affix fasteners **1357** and **1361** to each other and/or remove fasteners **1357** and **1361** from each other. For example, magnets may be placed in cavities **1363** and at the outer (convex) edge of components **1359**, attracting components **1359** into cavities **1363** and securing fastener **1361** to fastener **1357**. As another example, magnets may be placed on the inner edge of components **1359** (i.e., on the concave surface of components **1359**), attracting components **1359** into fastener **1361**, for example to assist removal of components **1359** from cavities **1363** or to prevent components **1359** from sliding in and out of fastener **1361** when not affixed to fastener **1357**. Corresponding magnets may also be placed on the surfaces of fastener **1361** that are in contact with components **1359** when those components are not extended into cavities **1363**. In other words, those magnets may attract (and, in particular embodiments, ultimately make directed contact with) magnets on the concave surface of components **1359**, securing components **1359** to fastener **1361**.

[0107] FIGS. **13**E-**13**G illustrate example embodiments of affixing a band **1369** with camera module **1373** to itself, for example when worn by a user of device **1367**. In FIG. **13**E, one or more magnets **1371** on one side of band **1369** may be attracted to one or more magnets **1379** on the other side of band **1369**. Magnets may be strips of magnetic material partially crossing a band, as illustrated by magnetic strip **1307** in FIG. **13**H, may be strips of magnetic material fully cross the band, as illustrated by strips **1321** and **1327** in FIG. **13**I, or may be areas of magnetic material **1393** as illustrated in FIG. **13**F. In addition to magnets **1371** and **1379**, band **1369** may include holes **1391** and one or more posts **1377** for securing band **1369** to the wearer of device **1367**. FIG. **13**G illustrates fasteners **1387** (e.g. screws **1396**) affixing to fasteners **1371** (e.g. nut with covering **1395**) to affix band **1381** to a wearer of device **1367** using holds **1383** (**1398**).

[0108] In particular embodiments, a band containing electrical components may also incorporate a traditional physical contact connector, as illustrated by connector **250** of FIG. **2**. The connector may allow for connectivity with the device, for example, for charging, system updates, debugging, or data transfer. Such a connector may be of the pogo variety or may be plated surfaces to which a charging cable can interface by contact. Such connectors may be plated in precious metals to prevent corrosion from exposure to moisture from the environment and the human body. In particular embodiments, physical connectors may be used only for power, and data may be transferred using short-range communication modalities, such as BLUETOOTH, near field communication (NFC) technology, or WI-FI.

[0109] In particular embodiments, a band may be used to house flexible batteries (such as, e.g., lithium-based batteries) to increase the energy storage of the device. As energy storage capacity may be tied to total volume, batteries internal to the band increase the storage capacity for volume-limited wearable devices without impacting the total size of the device body.

[0110] As described more fully below, an wearable electronic device may include one or more sensors on or in the device. For example, an wearable electronic device may include one or more optical sensors or depth sensors. Optical sensors may be placed in any suitable location, such as for example on the face of the device, on a band facing outward from the user's body, on a band facing opposite the face, on a band facing toward the user's body, or any suitable combination thereof. FIG. **15** illustrates a device **1500** with a band having an outward-facing optical sensor **1505**. Placement of an optical sensor on the band may reduce the number of high-frequency signals inside the case, allowing for lighter shielding within the device body and thus weight and volume savings. FIGS. **14**A-**14**D illustrate example camera placements for different embodiments of an wearable electronic device. In particular embodiments, electronics such as that for processing camera input may be located in the band as well, for example in a "volcano" shape housing the camera, as illustrated by housing **125** in FIG. **1**. In particular embodiments, other sensors may be placed near an optical sensor, such as for example in the same housing as the optical sensor on the band of the device. For example, a depth sensor may be used in conjunction with an optical camera to enhance display or detection of a device's environment, or to determine which object a user is pointing at or interacting with via a gesture.

[0111] In particular embodiments, placement of an optical sensor on the band may be adjustable by the user within a predetermined range. In particular embodiments, placement of an optical sensor on the band may be optimized such that the sensor is conveniently aimable by the user. For example, as illustrated by FIG. **15** if the user wears the device about the user's wrist, optical sensor **1505** may be placed in an outward-facing fashion such that the optical sensor aims outward from the user's body when the user's palm is roughly parallel to the ground.

[0112] In particular embodiments, placement of an optical sensor may be such that the user may view the display of the device while the sensor is pointing outward from the user's body. Thus, the user may view content captured by the optical sensor and displayed by the device without blocking the user's view of the physical scene captured by the sensor, as illustrated by the viewing triangle in FIG. **16**. A display **1620** of a device **1600** may have an associated viewing cone, e.g., the volume within which the display can be reasonably viewed. In FIG. **16**, user **1615** (1) views a real trophy **1610** and (2) views an image of the trophy on display **1620** of device **1600** from within the viewing cone of display **1620** by aiming sensor **1605** at the real trophy. Sensor **1605** has an associated angle of view corresponding to a volume within which images can be reasonably captured by sensor **1605**. Note that in the example of FIG. **16**, sensor **1605** is placed such that the user can conveniently aim sensor **1605** outward while maintaining display **1620** of device **1600** in a direction facing the user, and can do so without device **1600** blocking the user's view of trophy **1610**.

[0113] FIG. **17** illustrates an example angle of view for an optical sensor. When object **1725** is in the angle of view of optical sensor **1705**, a user may view both object **1725** and an image **1710** or **1715** of object **1725** as displayed on device **1700**. For example, when the user's hand **1720** is in the angle of view, the user may view object **1725**, hand **1720**, and an image **1710** of object **1725** and hand **1720** on display **1700** of the device. In contrast, when hand **1720** is not in the angle of view of sensor **1705**, hand **1720** is not displayed by image **1715** presented on display **1700**. When worn by a user, the device's sensor may capture the user's hand/arm/fingers in the angle of view of the sensor while performing a gesture to be captured by the same or other sensors (e.g. a gesture selecting an object in the angle of view of the device, such as, for example, pinching, tapping, or pulling toward or pushing away). The sensor and display may be oriented such that, when worn by a user, an object to be displayed on the device is in the angle of view of the device while the device does not block the user's view of the object and the user's gaze is within the viewing cone of the device's display. In particular embodiments, a user may interact with the image captured by the sensor or displayed on the device, such as, for example, by tapping on the portion of the display at or near where the image is displayed, by performing a gesture within the angle of view of the sensor, or by any other suitable method. This interaction may provide some functionality related to the object, such as, for example, identifying the object, determining information about the object, and displaying at least some of the information on the display; by capturing a picture of the object; or by pairing with or otherwise communicating with the object if the object has pairing/communicating capabilities.

[0114] In particular embodiments, an optical or depth sensor module (which may be used interchangeably, where appropriate) may communicate with a device via a simple extension of the bus the optical sensor would use if it were directly mounted on the main printed circuit board (PCB), as illustrated in FIG. **18**A. In FIG. **18**A, optical sensor **1825** transmits data over flexible printed circuits or wiring **1820** to an integrated control **1810**, which in the example of FIG. **18**A is located in or on device **1805**, which houses the main printed circuit board. FIG. **18**B illustrates the optical sensor integrated circuit **1850** on or in the optical sensor module **1860**, which also houses optical sensor **1855**. Communication between the main printed circuit board of device **1830** and electronics in camera module **1860** occur via flexible printed circuit **1845**. The arrangement of FIG. **18**B may allow an integrated circuit to compress and otherwise process the data and send it via a method that requires fewer signal lines, or that requires a smaller transfer of data. That may be beneficial since the band must flex when the user wears the device, and thus a smaller number of lines may be desirable. Such an approach can reduce the number of lines to one or two signal lines and two power lines, which is advantageous for packaging, molding, and reliability. In particular embodiments, one or more of the electronics described above must be shielded to prevent electromagnetic interference from the long high-frequency cabling. The use of a parallel bus is common is such cases, and may require the use of a larger cable or FPC.

[0115] In one embodiment, the camera control integrated circuit may be mounted directly on a small circuit board at the optical module, as illustrated in FIGS. **18**A-B. An wearable electronic device may include any suitable sensors. In particular embodiments, one or more sensors or its corresponding electronics may be located on a band of the device, in or on the body of a device, or both. Sensors may communicate with each other and with processing and memory components through any suitable wired or wireless connections, such as for example direct electrical connection, NFC, or BLUETOOTH. Sensors may detect the context (e.g. environment) or state of the device, the user, an application, or another device or application running on another device. This disclosure contemplates an wearable electronic device containing any suitable configuration of sensors at any suitable location of the wearable electronic device. In addition, this disclosure contemplates any suitable sensor receiving any suitable input described herein, or initiating, involved in, or otherwise associated with the provision of any suitable functionality or services described herein. For example, touch-sensitive sensors may be involved in the transition between graphical user interfaces displayed on the device, as described more fully herein. This disclosure further contemplates that functionality associated with the wearable device, activation/deactivation of sensors, sensitivity of sensors, or priority of sensor processing may be user-customizable, when appropriate.

[0116] FIG. **19** illustrates an example sensor detection system and illustrates example sensors for an wearable electronic device. Sensors send data in a sensor-specific format to the sensor hub subsystem of the device. For example, sensors **19**A illustrated in example sensor module **1924** may include one or more: face-detecting cameras **1902**, outward-facing cameras **1904**, face proximity sensors **1906**, face touch sensors **1908**, band touch sensors **1910**, acoustic skin touch sensors **1912**, inertial measurement system (IMU) **1914**, gravity vector sensors **1916**, touch sensors **1918** and **1920**, and any other suitable sensors **1922**. Data from sensors is sent to sensor hub **19**B illustrated in example sensor hub module

1944. The data is conditioned and cleaned of noise in steps **1928** and **1930** as needed and transferred to a locked-state detector **1942**. Locked state detector **1942** detects when the device is inactive, and disables sensors as needed to conserve power, while monitoring the sensor data for a gesture or other suitable input that may reactivate the device. For example, numeric gesture detectors receive sensor output and compare that output to one or more numeric thresholds to determine an outcome. Heuristic gesture detectors **1934** receive sensor output and make decisions based on one or more decision trees, such as for example ANDing rules applied to more than one threshold. Pattern-based gesture detectors **1938** evaluate sensor input against a predetermined library of gesture patterns **1940**, such as for example patterns determined by empirical evaluation of sensor output when a gesture is performed. One or more gesture priority decoders **1948** evaluate output from gesture detectors, locked state detectors, or both to determine which, if any, of the detected gestures should be utilized to provide functionality to a particular application or system-level process. More broadly, in particular embodiments, when the device is active, application-requested or system-requested sensor detectors are activated in turn and provide their data to the sensor priority decoder. In particular embodiments, the priority detector determines which, if any, of a plurality of sensor input to process, and this disclosure contemplates that combined input from multiple sensors may be associated with functionality different than functionality associated with each sensor input individually. The decoder decides when a sensor has been detected with sufficient certainty, and provides sensor data to the sensor hub driver. The driver provides an application programming interface (API) to the end applications and system controllers, which in turn produce necessary output and navigation. For example, FIG. **19** illustrates example sensor hub driver **1950**, application APIs **1952**, system navigation controllers **1954** for, for example, determining appropriate system functionality (for example, system-level navigation **1962** through a graphical user interface of the device), and application-level gesture priority detectors for applications **1956**. While sensor hub **19**B and application processor **19**C (illustrated in example application processor module **1964**) of FIG. **19** are illustrated as separate entities, they may be expressed by (and their functions performed by) at least some of the same or similar components. In particular embodiments, the boundaries delineating the components and functions of the sensor hub and the application processor may be more or less inclusive. The boundaries illustrated in FIG. **19** are merely one example embodiment. As for sensors themselves, functions executed by and components of the sensor hub system and application processor may occur or be in the device body, in the band, or both. Particular embodiments may use more than one sensor hub or application processor, or components therein, to receive and process sensor data.

[0117] Sensors may internally produce sensor data, which may be simply filtered or reformatted by, for example, a detector or data conditioner. Raw data may be formatted to an uniform format by the data formatter for ingestion by the Application API. Recognizers may use numeric models (such as decision trees), heuristic models, pattern recognition, or any other suitable hardware, software, and techniques to detect sensor data, such as gesture input. Recognizers may be enabled or disabled by the API. In such cases, the associated sensors may also be disabled if the recognizer is not to receive data from the sensors or is incapable of recognizing the sensor data.

[0118] A device may incorporate a database of sensor outputs that allow the same detector to detect many different sensor outputs. Depending on the requests produced by the API, a sensor priority decoder may suppress or pass through sensor output based on criteria supplied. The criteria may be a function of the design of the API. In particular embodiments, recognizers may ingest the output of more than one sensor to detect sensor output.

[0119] In particular embodiments, multiple sensors may be used to detect similar information. For example, both a normal and a depth sensing camera may be used to detect a finger, or both a gyroscope and a magnetometer may be used to detect orientation. When suitable, functionality that depends on or utilizes sensor information may substitute sensors or choose among them based on implementation and runtime considerations such as cost, energy use, or frequency of use.

[0120] Sensors may be of any suitable type, and as described herein, may be located in or on a device body, in or on a band, or a suitable combination thereof. In particular embodiments, sensors may include one or more depth or proximity sensors (terms which may be used interchangeably herein, when appropriate), such as for example infrared sensor, optical sensors, acoustic sensors, or any other suitable depth sensors or proximity sensors. For example, a depth sensor may be placed on or near a display of a device to detect when, e.g., the user's hand, finger, or face comes near the display. As another example, depth sensors may detect any object that a user's finger in the angle of view of the depth sensor is pointing to, as described more fully herein. Depth sensors also or in the alternative may be located on a band of the device, as described more fully herein. In particular embodiments, sensors may include on or more touch-sensitive areas on the device body, band or both. Touch-sensitive areas may utilize any suitable touch-sensitive techniques, such as for example resistive, surface acoustic wave, capacitive (including mutual capacitive or self-capacitive), infrared, optical, dispersive, or any other suitable techniques. Touch-sensitive areas may detect any suitable contact, such as swipes, taps, contact at one or more particular points or with one or more particular areas, or multi-touch contact (such as, e.g., pinching two or more fingers on a display or rotating two or more fingers on a display). As described more fully herein, touch-sensitive areas may comprise at least a portion of a device's display, ring, or band. Like for other sensors, in particular embodiments touch-sensitive areas may be activated or deactivated for example based on context, power considerations, or user settings. For example, a touch-sensitive portion of a ring may be activated when the ring is "locked" (e.g. does not rotate) and deactivated when the ring rotates freely. In particular embodiments, sensors may include one or more optical sensors, such as suitable cameras or optical depth sensors.

[0121] In particular embodiments, sensors may include one or more inertial sensors or orientation sensors, such as an accelerometer, a gyroscope, a magnetometer, a GPS chip, or a compass. In particular embodiments, output from inertial or orientation sensors may be used to activate or unlock a device, detect one or more gestures, interact with content on the device's display screen or a paired device's display screen, access particular data or activate particular functions of the device or of a paired device, initiate communications between

a device body and band or a device and a paired device, or any other suitable functionality. In particular embodiments, sensors may include one or more microphones for detecting e.g. speech of a user, or ambient sounds to determine the context of the device. In addition, in particular embodiments a device may include one or more speakers on the device body or on the band.

[0122] In particular embodiments, sensors may include components for communicating with other devices, such as network devices (e.g. servers or routers), smartphones, computing devices, display devices (e.g. televisions or kiosks), audio systems, video systems, other wearable electronic devices, or between a band and a device body. Such sensors may include NFC readers/beacons, BLUETOOTH technology, or antennae for transmission or reception at any suitable frequency.

[0123] In particular embodiments, sensors may include sensors that receive or detect haptic input from a user of the device, such as for example piezoelectrics, pressure sensors, force sensors, inertial sensors (as described above), strain/stress sensors, or mechanical actuators. Such sensors may be located at any suitable location on the device. In particular embodiments, components of the device may also provide haptic feedback to the user. For example, one or more rings, surfaces, or bands may vibrate, produce light, or produce audio.

[0124] In particular embodiments, an wearable electronic device may include one or more sensors of the ambient environment, such as a temperature sensor, humidity sensor, or altimeter. In particular embodiments, an wearable electronic device may include one or more sensors for sensing a physical attribute of the user of the wearable device. Such sensors may be located in any suitable area, such as for example on a band of the device or on base of the device contacting the user's skin. As an example, sensors may include acoustic sensors that detects vibrations of a user's skin, such as when the user rubs skin (or clothing covering skin) near the wearable device, taps the skin near the device, or moves the device up and down the user's arm. As additional examples, a sensor may include one or more body temperature sensors, a pulse oximeter, galvanic-skin-response sensors, capacitive imaging sensors, electromyography sensors, biometric data readers (e.g. fingerprint or eye), and any other suitable sensors. Such sensors may provide feedback to the user of the user's state, may be used to initiate predetermined functionality (e.g. an alert to take particular medication, such as insulin for a diabetic), or may communicate sensed information to a remote device (such as, for example, a terminal in a medical office).

[0125] An wearable electronic device may include one or more charging components for charging or powering the device. Charging components may utilize any suitable charging method, such as capacitive charging, electromagnetic charging, trickle charging, charging by direct electrical contact, solar, kinetic, inductive, or intelligent charging (for example, charging based on a condition or state of a battery, and modifying charging actions accordingly). Charging components may be located on any suitable portion of the device, such as in or on the body of the device or in or on the band of a device. For example, FIG. **20**A illustrates a charger **2000** with slot **2005** for connecting a charging component with the charger. For example, slot **2005** may use friction, mechanical structures (such as latches or snaps), magnetism, or any other suitable technique for accepting and securing a prong from a charging component such that the prong and charger **2000** make direct electrical contact. FIG. **20**C illustrates prong **2015** on band **2010** utilizing pogo-style connectors to create a circuit connection between charger **2022** and band **2010** through contacts **2020**. In particular embodiments, prong **2015** may be on charger **2022** and slot **2005** of FIG. **20**A may be on the band or body of the wearable device. In particular embodiments, contacts **2020** (such as, for example, pogo-style connectors) may be on the body of the device, which may be used to create a circuit between the band or the charger for charging the device. Charger **2000** of FIG. **20**A may be connected to any suitable power source (such as, for example, power from an alternating current (AC) outlet or direct current (DC) power from a USB port on a computing device) by any suitable wired or wireless connection.

[0126] Charger **2000** may be made of any suitable material, such as acrylic, and in particular embodiments may have a non-slip material as its backing, such as e.g. rubber. In particular embodiments, charger **2000** may be affixed or attached to a surface, for example may be attached to a wall as illustrated in FIG. **20**B. Attachment may be made by any suitable technique, such as for example by mechanically, magnetically, or adhesively. In particular embodiments, an wearable electronic device may be fully usable while attached to the charger. For example, when a charging component is located on the body of the device, the device may sit in the charger while a user interacts with the device or other devices communicate with the device.

[0127] As another example of a charging components in a wearable electronic device, FIGS. **21**A-**21**B illustrate additional example chargers using e.g. inductive charger. As illustrated in FIGS. **21**A-**21**B, a band may include one or more charging coils **2110**. As described above, this disclosure contemplates charging coils (or any other suitable charging component) incorporated in or on the body of the device, in alternative to or in addition to on the band of the device. A magnetic field **2105** generated by e.g. charging surface **2115** or charging surface **2120** passes through charging coil **2110**. Charging surface **2120** of FIG. **21**B may improve the density of the magnetic field **2105** through charging coil **2110** relative to charging surface **2115** and allows more precise placement than charging surface **2115**, thus improving the charge transfer rate of the system. This disclosure contemplates that, when suitable, charging may power components on or on the body of the device, components in or on the band, or both.

[0128] In particular embodiments, the band or device may implement an antenna for a wireless charging solution. Since wireless charging operates optimally in the absence of ferrous metals, this allows a wider choice of materials for the body of the device, while allowing improved wireless charging transfer capacity by allowing the coil to be held between the poles of a charging driver (as described above) rather than being simply coplanar to the driver. As described above and illustrated in FIG. **2**, the active band may also incorporate a traditional internal physical contact connector **250**.

[0129] In particular embodiments a charging unit with an internal charge reservoir may be associated with a wearable electronic device. When plugged into the wall, the charging unit can charge both an attached device and the charging unit's internal reservoir. When not plugged in, the charging unit can still charge an attached device from its reservoir of power until that reservoir is depleted. When only the charger is connected to a power source without a device, it still charges itself, so that it can provide additional power for the

device at a later point. Thus, the charging unit described herein is useful with and without being plugged into a power source, as it also can power any partially-charged device for a while when a person is not able to connect to a power source, for example when travelling, on plane, train station, outdoors, or anywhere a user might need charge for a device but does not have access to a power source. The device can be both in standby or in-use while the charger charges the device, and no modifications to the software or hardware of the target device is needed. Additional benefits of one or more embodiments of the invention may include reducing the number of items one must carry, providing the benefits of both a charger and a power pack, making charger useful to carry when on the move, and reducing the number of cables and connectors one must carry to extend the battery life of their devices. This disclosure contemplates that such a charging unit may be applied to any suitable electronic devices, including but not limited to an wearable electronic device.

[0130] FIGS. **22**A-**22**B illustrate particular embodiments of an example charging unit **2210** with example connections **2205** to device **2200** and connections **2215** and **2220**. For example, FIG. **22**A illustrates cable connectivity from the charging unit **2210** to device **2200** and to an external power source. As another example, FIG. **22**B illustrates charging unit **2210** with cable connectivity from device **2200** and direct connectivity to a power source. This disclosure contemplates any suitable connections between a device, the charging unit, and a power source charging the charging unit. For example, connections both to the device and to the power source may be direct, via cabling, or wireless.

[0131] As described above, a charging unit can charge a device from the charging unit's internal charging reservoir even when not connected to an external power source, and can charge itself, a connected device, or both when connected to an external power source. This disclosure contemplates any suitable scheme for allocating charge between the charging unit and device. Such allocation scheme may depend on the amount of charge internal to the device, internal to the charging unit, the amount of power being consumed by the device, the charging capabilities of an external power source, or any suitable combination thereof. In addition or the alternative, charging threshold may determine which allocation scheme to use. For example, one charging scheme may be used when the device is near full charge and the charging unit has little charge left, and another may be used when the device has little charge left. FIGS. **23**-**24** illustrate example charging schemes for the charging unit and connected device. For example, as illustrated in FIG. **24**, when a device gets connected to a charger as in step **2400**, step **2405** determined whether the device is fully charged. If yes, no further charging action is taken. If not, step **2410** determines whether the charger is connected to an external power source, such as for example line voltage. If so, the device is charged from that external source in **2425**. If not, step determines whether the charger has any power left, and if so, the device is charged from the charger's internal power source in step **2420** from line voltage rather than the charging unit's reservoir when the charging unit is connected to the line voltage. FIG. **23** illustrates a similar decision tree. If a device is connected to a charger (step **2300**) that is connected to a power source (step **2300**), then step **2310** determines whether the device is fully charged, and if not, the device is charged from the power source the charger is connected to (step **2315**). Similarly, step **2320** determines whether the charger is fully charged, and if not, the charger unit is charged from the power source in step **2325**. In particular embodiments, the allocation scheme used may be determined or customized by a user.

[0132] FIGS. **25**A-**25**E illustrate example embodiments of energy storage and charging in a device and a charging unit. In FIG. **25**A of the illustrated embodiment, charge reservoir **2500** of the device and charge reservoir **2520** of the charging unit are both depleted. FIGS. **25**B-**25**C illustrate charging the charge reservoir **2500** of the device and charge reservoir **2505** of the device after the charging unit has been connected to external power source **2510**. After a short time, both charging unit and the device are charged simultaneously, with charging being distributed such that each is given the same percent of its total charge capacity. Both charging reservoir **2500** of the device and the charging reservoir **2505** of the charging unit are completely charged after some time, as illustrated in FIG. **25**C. As described herein, the amount of charge allocated to the device or the charging unit may vary based on any suitable charge allocation scheme. For example, if the power conversion capability of the charging unit is limited, the charging unit's reservoir is nearly full and the device's charge reservoir is nearly empty, or the energy demand of the device is very high, the charging unit may prioritize the charging of the device before charging its internal reserves. As another example, charging of the charging unit may continue until a predetermined threshold charge has been reached.

[0133] FIGS. **25**D-**25**E illustrate transfer of charge between the charging unit and the device when the charging unit is not connected to an external power source. As illustrated in FIG. **25**D, a device with little charge remaining in its reservoir **2500** is connected to a charging unit with a fully charged reservoir **2505**. As discussed above, this disclosure contemplates any suitable charge allocation scheme between the device and the charger when the charger is not connected to an external power source. That allocation scheme may be the same as or different from the allocation schemed used when the charging unit is connected to an external power source. For example, FIG. **25**E illustrates an allocation scheme that maximizes the charge of the charging reservoir **2500** of the device. As long as the charging unit still has charge, it continues charging device until the device is fully charged or until the charging reservoir **2505** of the charger is completely empty.

[0134] FIG. **26** illustrates an example internal architecture of an example charging unit **2600**. Line voltage converter **2605** produces a lower voltage direct current from the high voltage line current **2610**. This voltage is fed both to battery charger/regulator **2630** and connector **2615**, to which a device can be connected via connection **2620** for charging. Battery charger **2630** uses available power from line voltage converter **2605** to charge the energy reservoir (battery **2635**). It may take an equal share of the power as the device, take a smaller share when the device demand is high (device priority), or take a larger share when internal power reserves are low (charger priority). Those priorities may be user-selectable.

[0135] Continuing the example of FIG. **26**, when line voltage converter **2605** is not providing power, charger/regulator **2630** produces the appropriate charging voltage from the power on battery **2635**. Regulator **2630** may be always on, or it may be switched on by connection to the device, or the press of a button that indicates the user wishes to charge the device. Once activated, regulator **2630** will charge the device until internal reserves are depleted. At that point, some charge may

still remain in battery **2635** to improve battery life, but it will not be available to the user. The device may incorporate an emergency mode that allows access to some of this energy to gain a minimal amount of emergency usage time, at the cost of battery lifetime. Regulator **2630** may continue to provide energy until either the device is unplugged, or until the device only draws a minimal amount of energy, indicating completion of charge. Finally, charger/regulator **2630** may include an on-demand display that shows the amount of energy remaining in reserve to the user. Since displays generally use energy, a button or other input may be used to trigger the display for a limited time. While FIG. **26** illustrates an example internal architecture of an example charging unit **2600**, this disclosure contemplates any suitable internal architecture of any suitable charging unit described herein, and contemplates that such a charging unit may be of any suitable size and shape.

[0136] In particular embodiments, functionality or components of the device (such as e.g. sensors) may be activated and deactivated, for example, to conserve power or reduce or eliminate unwanted functionality. For example, a locked state detector detects when the device is inactivated, and disables sensors as needed to conserve power, while monitoring the sensor data for a gesture or other suitable input that may reactivate the device. A device may have one or more power modes, such as sleep mode or fully active mode. As one example, in particular embodiments the device is arm-worn, and a touch surface of the device may come in contact with objects and persons while in regular use. To prevent accidental activation, an accelerometer or other inertial sensor in the body or band of the device can be used to gauge the approximate position of the device relative to the gravity of the Earth. If the gravity vector is detected towards the sides of the device (e.g. the device is determined by at the user's side or the display is determined not to be pointed at the user) the touch screen can be locked and display disabled to reduce energy use. When the gravity vector is determined to be pointing below the device (e.g. the device is roughly horizontal, resulting in a determination that the user is viewing or otherwise using the device), the system may power up the display and enable the touch screen for further interactions. In particular embodiments, in addition or in the alternative to the direction of the gravity vector waking or unlocking a device, a rate of change of the direction or magnitude of the gravity vector may be used to wake or unlock a device. For example, if the rate of change of the gravity vector is zero for a predetermined amount of time (in other words, the device has been held in a particular position for the predetermined amount of time) the device may be woken or unlocked. As another example, one or more inertial sensors in the device may detect a specific gesture or sequence of gestures for activating a display or other suitable component or application. In particular embodiments, the encoder of the device is robust to accidental activation, and thus can be left active so that the user may change between selections while bringing the device up to their angle of view. In other embodiments the encoder may be deactivated based on context or user input.

[0137] In addition or the alternative to power conservation, particular embodiments may lock one or more sensors, particular functionality, or particular applications to provide security for one or more users. Appropriate sensors may detect activation or unlocking of the secure aspects of the device or of another device paired with or communicating with the wearable device. For example, a specific gesture performed with the device or on a touch-sensitive area of the device may unlock one or more secure aspects of the device. As another example, particular rotation or sequence of rotations of a rotatable ring of the device may unlock one or more secure aspects of the device, on its own or in combination with other user input. For example, a user may turn a rotatable ring to a unique sequence of symbols, such as numbers or pictures. In response to receiving the sequence of rotational inputs used to turn the rotatable ring, the display may display the specific symbol(s) corresponding to each rotational input, as described more fully herein. In particular embodiments, the symbols used may be user-specific (such as, e.g., user pictures stored on or accessible by the device or symbols pre-selected by the user). In particular embodiments, different symbols may be presented to the user after a predetermined number of unlockings or after a predetermined amount of time. The example inputs described above may also or in the alternative be used to activate/deactivate aspects of the device, particular applications, or access to particular data. While this disclosure describes specific examples of user input unlocking secure aspects of a device, this disclosure contemplates any suitable input or combination of inputs for unlocking any secure aspect of the device. This disclosure contemplates that input or other suitable parameters for unlocking secure aspects of a device or activating/deactivating components of the device may be user-customizable.

[0138] In particular embodiments, an wearable electronic device may detect one or more gestures performed with or on the device. Gestures may be of any suitable type, may be detected by any suitable sensors (e.g. inertial sensors, touch sensors, cameras, or depth sensors), and may be associated with any suitable functionality. For example, one or more depth sensors may be used in conjunction with one or more cameras to capture a gesture. In particular embodiments, several depth sensors or cameras may be used to enhance the accuracy of detecting a gesture or the background associated with a gesture. When appropriate, sensors used to detect gestures (or processing used to initiate functionality associated with a gesture) may be activated or deactivated to conserve power or provide security, as described more fully above. As shown above, FIG. **19** illustrates an example sensor detection system and provides specific examples of gesture detection, processing, and prioritization. In particular embodiments, specific applications may subscribe to specific gestures or to all available gestures; or a user may select which gestures should be detectable by which applications. In particular embodiments, gestures may include manipulation of another device while using the wearable device. For example, a gesture may include shaking another device while aiming, moving, or otherwise utilizing the wearable device. This disclosure contemplates that, where suitable, any of the gestures described herein may involve manipulation of another device. While the examples and illustrations discussed below involve specific aspects or attributes of gestures, this disclosure contemplates combining any suitable aspects or attributes of the gesture and sensor described herein.

[0139] In particular embodiments, an wearable electronic device may detect one or more gestures performed with or on the device. Gestures may be of any suitable type, may be detected by any suitable sensors (e.g. inertial sensors, touch sensors, cameras, or depth sensors), and may be associated with any suitable functionality. For example, one or more depth sensors may be used in conjunction with one or more cameras to capture a gesture. In particular embodiments,

several depth sensors or cameras may be used to enhance the accuracy of detecting a gesture or the background associated with a gesture. When appropriate, sensors used to detect gestures (or processing used to initiate functionality associated with a gesture) may be activated or deactivated to conserve power or provide security, as described more fully above. FIG. **19**. As described more fully above, FIG. **19** illustrates an example sensor detection system and provides specific examples of gesture detection, processing, and prioritization. In particular embodiments, specific applications may subscribe to specific gestures or to all available gestures; or a user may select which gestures should be detectable by which applications. In particular embodiments, gestures may include manipulation of another device while using the wearable device. For example, a gesture may include shaking another device while aiming, moving, or otherwise utilizing the wearable device. This disclosure contemplates that, where suitable, any of the gestures described herein may involve manipulation of another device. While the examples and illustrations discussed below involve specific aspects or attributes of gestures, this disclosure contemplates combining any suitable aspects or attributes of the gesture and sensor described herein.

[0140] In particular embodiments, gestures may include gestures that involve at least on hand of the user and an appendage on which the device is worn, such as e.g. the other wrist of the user. For example, in particular embodiments, a user may use the hand/arm on which the device is worn to appropriately aim an optical sensor of the device (e.g. a camera or depth sensor) and may move or position the other arm/hand/fingers to perform a particular gesture. As described herein and illustrated in FIGS. **16-17**, in particular embodiments the scene aimed at may be displayed on the device's display, such that a user can view both the real scene, the scene as-displayed on the device, and the user's hand/arm/fingers, if in the angle of view of the. In particular embodiments, the displayed scene may include the hands/fingers/arm used detected by the sensor and used to perform the gesture. FIGS. **27-28** illustrate example gestures in which the user aims an outward-facing (e.g. away from the body of the user) sensor on the device (e.g. on the band of the device, as illustrated in the figures) and moves or positions his other arm/hand/fingers to perform a gesture. For example, in FIG. **27**, an outward sensor detects an object in the angle of view of the sensor **2705**, an outward sensor (which may be the same sensor detecting the object) detects one or more fingers pointing at the object **2710**, and when the pointing finger(s) are determined to be at rest **2715**, a gesture is detected **2720**. Referring to FIG. **19**, raw gesture data captured by the outward-facing camera can be conditioned and cleaned of noise and that data can be sent to the Heuristic Gesture Detector. The Gesture Priority Decoder processes the gesture data and determines when the gesture has been identified with sufficient certainty. When the gesture has been identified, the gesture is sent to the Sensor Hub Driver which provides an API to the end applications and system controllers.

[0141] As examples of functionality associated with this gesture, a camera may focus on the object, the object detected and pointed at may then appear on the display, information about that object may appear on the display, and displayed content may be transferred to another device's display (e.g. when the object is another device). FIG. **28** illustrates an example gesture similar to the gesture of FIG. **27**; however, the illustrated gesture includes the outward-facing sensor detecting a "tapping" motion of the finger(s) (e.g. that the finger(s) are moving away from the sensor). For example, the gesture of FIG. **28** may include detecting an object in the scene of a camera (or other suitable sensor) in step **2805**, detecting the finger in the scene in step **2810**, detecting a lack of lateral movement of the finger in step **2815**, detecting the finger tip moving further away from the sensor in step **2820**, and detecting a gesture in step **2825**. The gesture illustrated in FIG. **28** may provide any suitable functionality. For example, the "tapped" object may be selected from the objects displayed on the display screen.

[0142] FIGS. **29-30** illustrate example gestures where an object is detected with an outward-facing sensor along with movement of the user's fingers and hand. For example, FIG. **29** illustrates the outward-facing sensor detecting two fingers separated **2915**, the two fingers coming together (e.g. in a pinching motion) **2920**, and then the pinched fingers moving towards the sensor **2925**. The motion of the fingers coming together and moving toward the sensor may occur simultaneously or in sequence, and performing the steps in sequence (or time between steps in the sequence) or simultaneously may each be a different gesture. In FIG. **30**, the two fingers illustrated are initially near together **3010**, and the outward-facing sensor detects the fingers moving apart **3020** and the hand moving away **3015**. As for FIG. **30**, the movement of the fingers and the hand may be simultaneous or in any suitable sequence. In addition, aspects of FIGS. **29-30** may be combined to form a gesture. For example, pinching fingers together and moving away from the sensor may be a unique gesture. In particular embodiments, the detected fingers or hand may be manipulating another device, and that manipulation may form part of the gesture. As for all example gestures described herein, this disclosure contemplates any suitable functionality associated with gestures illustrated in FIGS. **29-30**.

[0143] FIGS. **31-32** illustrate example gestures similar to FIGS. **29-30**, except that here all fingers are used to perform the gesture. In FIG. **31**, the fingers are detected as initially close together (e.g. in a first) **3105**, the first is detected moving away from the sensor **3110**, and the sensor detects the first opening **3115**. Again, the sequence of steps illustrated may occur in any suitable order. FIG. **32** illustrates the reverse of FIG. **31**. FIGS. **31-32** may be associated with any suitable functionality. For example, FIG. **31** illustrates an example of sending all or a portion of content displayed on the device to another device, such as the television illustrated in FIG. **31**. Likewise, the gesture in FIG. **32** may pull some or all of the content displayed on another device to the display of the wearable device. For example, the gestures of FIGS. **31-32** may be implemented when the user performs the gestures with the wearable device in proximity of another device, such as a smart phone, tablet, personal computing device, smart appliance (e.g. refrigerator, thermostat, or washing machine), or any other suitable device. The described functionality are merely examples of functionality that may be associated with gestures illustrated in FIGS. **31-32**, and this disclosure contemplates that other suitable gesture may perform the described functionality.

[0144] FIGS. **33-37** illustrate an outward-facing sensor detecting a hand or portion of an arm swiping in front of the sensor. In particular embodiments, swiping with the front of the hand may be a different gesture than swiping with the back of the hand. FIGS. **33-34** illustrate the hand being swiped from right to left **3310-3315** and left to right **3410-**

3415 across the sensor's angle of view, and FIGS. **35-37** illustrate the hand being swiped from bottom to top **3510-3515** (as well as **3735-3740**) and top to bottom **3610-3615** (as well as **3710-3715**) across the sensor's angle of view. As illustrated, the hand may initially start in the angle of view, pass through the angle of view, and exit the angle of view (as illustrated in FIG. **36**); may start outside of the angle of view, pass through the angle of view, and exit the angle of view (as illustrated in FIG. **37**); may start out of the angle of view, pass through a portion of the angle of view, and remain in the angle of view (as illustrated in FIGS. **33-35**); or may start in the angle of view, pass through a portion of the angle of view, and remain in the angle of view. This disclosure contemplates the hand being swiped at other angles, such as, e.g., entering at a 45 degree angle below and to the right of the device and exiting at a 45 degree angle relative to the top and to the left of the device. Further, this disclose contemplates detecting hand swipes in motions other than a straight line, such as curved swipes or triangular swipes. This disclosure contemplates any suitable functionality associated with any or all of the gestures illustrated in FIGS. **33-37**, such as, for example, transitioning among user interfaces displayed on the device or among applications active and displayed on the device, opening or closing applications, or scrolling through displayed content (e.g. documents, webpages, or images). As reiterated elsewhere, this disclosure contemplates any suitable gesture associated with the functionality described in relation to FIGS. **33-37**.

[0145] FIGS. **38-39** illustrate example gestures where the outward-facing sensor detects the user's hand in the angle of view **3805** and detects one or more fingers pointing in a direction (along with, in particular embodiments, a portion of the user's hand or arm) **3815**. The gesture detected may depend on the fingers detected or direction the detected fingers are pointed. For example, as illustrated in FIG. **38** the finger may be a thumb pointing upwards **3820**, and in FIG. **39** the finger may be a thumb pointing downwards **3920**. Any suitable functionality may be associated with gestures illustrated in FIGS. **38-39**, such as saving or deleting a file locally on the device or on an associated device, or approving or disapproving of changes made to settings or other content.

[0146] FIG. **40** illustrates an example gesture involving a shape made with multiple fingers or a portion of the hand in the angle of view of the outward-facing sensor. As illustrated in FIG. **40**, the shape may be a ring **4010**, and the gesture may include fingers not involved in the shape pointing in a specific direction **4015**. As illustrated in FIG. **40**, a gesture may include holding the shape **4020** (and possibly the other fingers) for a predetermined amount of time.

[0147] FIGS. **41-42** illustrate example gestures including covering all or a portion of the outward-facing sensor with the user's fingers or hand. Covering the sensor from the top of the device with a thumbs-down type gesture **4105** (as illustrated in FIG. **41**) may be a different gesture than covering the sensor from the bottom of the device **4210** (as illustrated in FIG. **42**) or the sides of the device. The direction of covering may be detected by, e.g., the shape of the hand when covering the device, the orientation of the hand when covering the device, data from other sensors indicating the direction in which the outward-facing sensor is being covered (e.g. detecting that the display and the outward-facing sensor are covered), or any other suitable technique.

[0148] FIGS. **43-44** illustrate example gestures where one or more of the user's fingers or portion of a hand/arm are detected in the angle of view of the outward-facing sensor **4305/4405**, and then move within the angle of view (or "frame") to perform a specific gesture **4310/4320/4410/4420**. In particular embodiments, a gesture may be any suitable movement or may be movement in a specific pattern. In particular embodiments, a gesture may be associated with the fingers or a portion of the hand/arm detected. For example, a single pointing finger may be associated with a gesture **4305** (as illustrated in FIG. **43**) or multiple fingers/a palm may be associated with a gesture **4405** (as illustrated in FIG. **44**). In particular embodiments, the direction of the palm (e.g. front, back, at an angle) may be detected and associated with a gesture.

[0149] FIG. **45** illustrates an example gesture include detecting a shape with multiple fingers or the hand/arm of the user **4505**, and detecting movement of the shape in the angle of view **4510/4520**. FIG. **45** illustrates the shape of FIG. **40** moving throughout the outward-facing sensor's angle of view.

[0150] FIG. **46** illustrates an example gesture involving detecting one or more fingers (some or all of a user's hand/arm) and their initial orientation, and subsequently detecting the change in orientation or the rate of change of orientation over time. For example, FIG. **46** illustrates detecting two fingers in a angle of view at step **4605**, detecting the fingers and edge of the hand in the angle of view at step **4610**, detecting the fingers making a "C" shape at step **4615**, decoding an initial orientation of the "C" shape at step **4620**, decoding a change in orientation of the "C" shape at step **4625**, determining a relative rotational value of the "C" shape at step **4630**, and detecting the gesture at step **4635**. This disclosure contemplates any suitable shape made with the user's fingers/hand/arm.

[0151] FIG. **47** illustrates an example gesture that involves detecting the number of fingers in a particular position in the outward-facing sensor's angle of view. For example, FIG. **47** illustrates detecting fingertips in an angle of view at step **4705**, such as for example one outstretched thumb, an outstretched thumb and a finger, or an outstretched thumb and two fingers. The specific fingertip orientation configuration is detected at step **4710**, and the mapping of the configuration to at least a numeric count of the fingers is performed in step **4715** to detect the gesture in step **4725**. Each of the displayed images may be a different gesture. This disclosure contemplates any suitable position of the fingers that comprise a gesture. As for all other example gesture described herein, this disclosure contemplates any suitable functionality associated with the gestures. For example, each gesture of FIG. **47** may be associated with a contact to call, e-mail, or text and the detected gesture may activate the call, e-mail, or text to the contact assigned to the gesture. In particular embodiments, the position of the hand/arm/fingers may indicate which method of contact should be used for the contact associated with the gesture.

[0152] FIGS. **48-49** illustrate example gestures involving dual sensors on the device. For example, FIG. **48** illustrates a sensor on the bottom band portion of the device. That sensors detects the position of the user's other hand relative to the device, and detects separation of the hand from the sensor. In particular embodiments, the gesture may include determining that both hands are moving, such as for example by additional information supplied by one or more inertial sensors in the device or by an inward-facing (e.g. facing the body of the user) camera detecting movement of the device via change in

scenery. For example, in FIG. **48** a hand is detected in the angle of view at step **4805**. A sensor detects that the hand is in a pinched shape at step **4810** and the same or another sensor detects that the device is in a horizontal orientation in step **4815**. A sensor detects the hand moving relative to the device at step **4820** and estimates the relative position at step **4825**. The gesture is detected at step **4830**. Similarly, FIG. **49** illustrates an example gesture also involving detection of the user's hand in the angle of view and subsequently moving away from a device sensor. However, in FIG. **49** the device sensor is positioned on the top of the device (e.g. a front-facing sensor). As an example, a hand is detected in the angle of view of a front-facing camera in step **4905**. The hand is detected in a pinched shape in step **4910**, and the device is detected in a horizontal orientation in step **4915**. The hand moves closer or further from the device in step **4920**, and the relative position estimate is performed in step **4925**, at which point the gesture is detected in step **4930**.

[0153] FIGS. **50-58** illustrate example gestures detected by at least one front-facing sensor (e.g. sensor on the top of the device). Any of the gestures of FIGS. **50-58** may be detected by sensors in any other suitable location (e.g. outward-facing, as described above), and any of the gestures detected by a sensor described in another location may be detected by a front-facing sensor, where appropriate. FIG. **50** illustrates an example gesture involving one or more fingertips hovering above the device, and the front-facing sensor detects the fingertips in step **5005**, detects the position of the fingertips or motion (or lack of motion) of those fingertips in steps **5010** and **5015** to detect a gesture in step **5020**. FIG. **51** illustrates an example gesture in which steps **5105** and **5110** are identical to **5005** and **5010**, respectively. However, the detected fingertips move away from the front-facing sensor in step **5115**; in particular embodiments, a gesture may include detecting one or more of the fingertips changing position relative to each other, such as for example moving apart as in step **5120**. FIG. **52** illustrates the fingertips detected by the sensor in step **5205**, the fingertips moving together in step **5210**, the fingers moving toward the device in step **5215**, and the duration of which the motion lasts in step **5220** to detect the gesture in step **5225**. As illustrated in FIG. **53**, in particular embodiments a gesture may include detecting a change in relative position of the fingertips in addition to the motion of the fingertips toward the sensor. For example, in step **5305** one or two fingers are detect on the front surface; in step **5310** the fingers are detected moving upward or downward; and a gesture is detected in step **5315**. In particular embodiments, the duration of the gesture of FIGS. **50-52** may determine whether a gesture is detected, or different durations may comprise different gestures.

[0154] FIGS. **54-57** illustrate example gestures involving motion of one or more fingers or motion of a portion of a hand/arm across the face of the device (and thus across the front-facing sensor). As illustrated, a gesture may depend on the number of fingers used (e.g. two fingers vs. a whole palm); on the direction of motion across the device face (e.g. bottom to top or left to right); on the duration of motion across the device face; on the proximity of the detected fingers or hand/arm to the device face; on the portion of the device face (e.g. all or a portion, and the relative location of the portion (e.g. bottom half)); or whether the detected portions are initially in the front-facing sensor's angle of view, initially out of the angle of view, end in the angle of view, or end out of the angle of view. For example, the gesture of FIG. **54** may include detecting one or two fingers detected on the front surface in step **5405**; detecting the fingers moving left in step **5410**, and detecting the gesture in step **5415**. As another example, FIG. **55** may include detecting one or two fingers detected on the front surface in step **5505**; detecting the fingers moving right in step **5510**, and detecting the gesture in step **5515**. As another example, FIG. **56** may include detecting no fingers in step **5605**, detecting multiple fingers entering the angle of view from the left, detecting the front surface covered, detecting the fingers exiting the frame in step **5620**, and detecting a gesture in step **5625**. As yet another example, FIG. **57** may include detecting no fingers in step **5705**, detecting multiple fingers entering the angle of view from the right in step **5710**, detecting a covering of the full front surface in step **5715**, detecting the fingers exiting the angle of view in step **5720**, and detecting a gesture in step **5725**. As with all gestures described herein, any suitable combination of those factors (and any other suitable factors associated with the gestures) may be used to determine a gesture or functionality corresponding to the gesture. Any suitable functionality may be associated with a gesture, such as, for example, transitioning between graphical user interface screens, scrolling through displayed content, or scrolling through available applications or devices to communicate/pair with.

[0155] FIG. **58** illustrates an example gesture involving one or more fingers detected on the edge of the device, and may include movement of those fingers around all or a portion of the edge of the device. For example, as illustrated in FIG. **58**, a gesture may include detecting no fingers in step **5805**, detecting a single finger at the edge of the front face in step **5810**, detecting a finger moving along the edge in step **5815**, decoding the angular motion of the finger relative to the device in step **5820**, and detecting a gesture in step **5825**. As an example of functionality associated with this gesture, the movement of the finger may rotate some or all of the displayed content on the device.

[0156] In particular embodiments, a gesture may include a motion of the wearable device, such as, for example, by the arm wearing the device. The motion may be detected by any suitable sensors, such as inertial sensors, orientation sensors, or any suitable combination thereof. FIGS. **59-66** illustrate example gestures involving detection of the gravity vector relative to the device (e.g. pointing in the direction of the device face or pointing down through the base) and detecting subsequent motion of the device relative to that gravity vector. For example, FIG. **59** may include detecting the gravity pointing downward through the face in step **5905**, detecting acceleration of the device along the same axis as the gravity vector is pointing in step **5910**, detecting that the acceleration of the device remains for some time step in step **5915**, and detecting a gesture in step **5920**. FIG. **60** is substantially similar to the gesture of FIG. **59**, except that the gravity vector points down through the base (rather than the face) in step **6005**. FIG. **61** illustrates a gesture that uses a gravity vector to determine orientation/position of the device, for example, that the device is not by the user's body. Motion of the device from the detected orientation (such, as for example, perpendicular to the gravity vector) may be detected, resulting in a gesture. For example, a detected gravity orientation may indicate that an arm is not by the side of the body in step **6105**, a lateral acceleration of the device may be detected in step **6110**, the acceleration may be detected for some time in step **6115**, and a gesture may be detected in step **6120**. As FIGS. **59-61** indicate, detecting an aspect of the motion (e.g. duration of

acceleration) may trigger a gesture, and ranges of an aspect (ranges of duration of motion) may each correspond to a different gesture. FIGS. **62-63** illustrate rotational motion of a device. As in FIG. **61**, detection of the initial orientation or position of the device may be part of the gesture detection. For example, the gesture of FIG. **62** may include detecting that the gravity vector indicates the arm is not by the side of the body in step **6205**, detecting some rotational motion in step **6210**, estimating that the radius of the rotational motion is large enough for elbow motion in step **6215**, estimating the relative rotation in step **6220**, and detecting a gesture in step **6225**. As another example, the gesture of FIG. **63** may include detecting that the gravity vector indicates the arm is not by the side of the body in step **6305**, detecting some rotational motion in step **6310**, estimating that the radius of the rotational motion is small enough for wrist motion in step **6315**, estimating the relative rotation in step **6320**, and detecting a gesture in step **6325**. As illustrated in FIGS. **62-63**, a gesture may include estimating the type of rotation of the device, such as, for example, rotation primarily from the shoulder (FIG. **62**), rotation primarily from the elbow (FIG. **63**), or any other suitable rotation. In addition or in the alternative to the radius of rotation, a gesture may include detecting the amount of rotation, duration of rotation, radial acceleration of the rotation, any other suitable aspect of the rotation, or any suitable combination thereof.

[0157] Like for FIGS. **61-63**, FIG. **64** indicates a gesture involving detecting the initial orientation or position of the device. For example, the gesture of FIG. **64** may include detecting the gravity vector indicates that the arm is not by the side of the body in step **6405**, detecting lateral acceleration of the arm along the axis of the arm in step **6410**, detecting that the acceleration remains for some time in step **6415**, and detecting a gesture in step **6420**. FIG. **65** illustrates that a gesture may include motion of the device along the axis of the appendage wearing the device, such as, for example, the acceleration of the device along that axis. The gesture may include an impact along the path of motion (e.g. caused by the hand stopping or contacting an object) and subsequent reversal of the motion. The back-and-forth motion may repeat until the motion stops or the hand returns to some position, such as, e.g., the user's side. In particular embodiments, different gestures may be based on the number or frequency of the back-and-forth motion. For example, the gesture of FIG. **65** may include detecting the gravity vector indicates that the arm is not by the side of the body in step **6505**, detecting that the hand is in motion in step **6510**, detecting an impulse (impact) along the path of the motion in step **6515**, detecting that the hand reversed motion along the same linear path in step **6520**, repeating steps **6515** and **6520** as suitable, detecting that the motion stops for some time in step **6525**, and detecting a gesture in step **6530**.

[0158] FIGS. **66-68** illustrate example gestures based on detection of motion that matches a predetermined motion template, which may be user-customizable or user-creatable. In particular embodiments, customizable gestures may include an initial position or orientation of the device, motion or aspects of motion in a particular direction, stopping and starting of motion, duration of motion, or any other suitable motion parameter. Some or all of the parameters may be user-customizable, in particular embodiments. In particular embodiments, a detected gesture may be determined by matching the detected motion to the closest available motion template. For example, as illustrated in FIGS. **66-68**, a gesture may correspond to a horizontal position or motion of the arm or fingers. For example, as illustrated in FIG. **66**, a gesture may include detecting a gravity vector oriented down through the bottom of the base of the device in step **6605**, detecting motion forward and inward in step **6610**, matching a motion template in step **6615** (for example, using heuristic, numeric, or pattern-based gesture recognition modules of FIG. **19**), and detecting a gesture in step **6620**. FIG. **67** may include detecting a gravity vector oriented sideways through the bottom of the base of the device in step **6705**, detecting motion forward and inward in step **6710**, matching a motion template in step **6715** (for example, using heuristic, numeric, or pattern-based gesture recognition modules of FIG. **19**), and detecting a gesture in step **6720**. FIG. **68** may include detecting a gravity vector indicating an arm is not by the side of the body in step **6805**, detecting motion of the device in step **6810**, detecting motion stopping in step **6815**, matching a motion template in step **6820**, selecting the best motion-template match in step **6825**, and detecting a gesture in step **6830**. While FIGS. **66-68** illustrate specific examples of customizable gestures corresponding to specific motion templates, this disclosure contemplates any suitable gestures (or any aspect thereof) detected by any suitable sensors being customizable by a user of the device.

[0159] In particular embodiments, gesture may optionally include detecting some non-motion or non-orientation input. For example FIGS. **69-71** illustrate a gesture comprising detection of acoustics, although the gestures illustrated do not require such detection. FIG. **69** illustrates an acoustic output (such as, e.g., ringing from an incoming or outgoing telephone call) or response, followed by some motion of the device (such as the device being brought to a user's face). For example, an audio response or output is initiated in step **6905**, upward motion is detected in step **6910**, stopping of upward motion is detected in step **6915**, the gravity vector is within a predetermined window in step **6920**, and a gesture is detected in step **6925**. In particular embodiments, a gesture may include detecting the gravity vector in a particular orientation or orientation window, as illustrated. The gesture of FIG. **69** may also include detecting the position of the user's hand/fingers. As an example of functionality that may be associated with the gesture illustrated in FIG. **69**, if the fingers are brought near the ear or face in the position indicated, the user may answer or place a telephone call. FIG. **70** and steps **7005-7025** illustrates an example gesture having similar attributes as those described for FIG. **69**, but involving different orientation of the user's hand/fingers. FIG. **71** illustrates an example gesture including acoustics generated by the user (e.g. by the user snapping her fingers together), which are detected by a microphone associated with the device. For example, FIG. **71** may include detecting a gravity vector indicating an arm is not by the side of the body in step **7105**, detecting a motion with relatively high acceleration in step **7110**, detecting a sudden change in one or more acoustic frequencies in step **7115**, and detecting a gesture in step **7120**. As illustrated in FIG. **71**, the snap motion may be detected solely by the motion generated by the snap alone (e.g. by the vibration of the user's hand/skin or by some degree or rate of change of rotation due to the snap), or may be detected by the combination of motion plus an auditory input generated by the snap. In particular embodiments, the auditory confirmation must be detected within a predetermined time of the motion for the gesture to be detected.

[0160] FIGS. **72-73** illustrate example gestures involving periodic motion of the device, such as shaking of the arm the device is on in the lateral or vertical direction. FIG. **72** illustrates a gesture including detecting the gravity vector indicating the arm is not beside the body in step **7205**, detecting the device moving laterally forward on an axis in step **7210**, detecting the device moving backwards on the same axis in step **7215**, repeating the steps of **7210** and **7215** as is desirable, and detecting a gesture in step **7220**. FIG. **73** illustrates a gesture including detecting the gravity vector indicating the arm is not beside the body in step **7305**, detecting the device moving vertically forward on an axis in step **7310**, detecting the device moving backwards on the same axis in step **7315**, repeating the steps of **7310** and **7315** as is desirable, and detecting a gesture in step **7220**. FIG. **74** illustrates an example gesture involving an adjustment of the position/orientation of the device relative to the user's body. For example, the gesture of FIG. **74** may include including detecting the gravity vector indicating the arm is beside the body in step **7405**, detecting the gravity vector indicating the arm is beside the body in step **7410**, detecting a gesture in step **7415**. Any suitable functionality may be associated with the gestures of FIGS. **72-75**, such as, for example, waking the device from a low-power state. FIG. **75** illustrates an example gesture involving the height of the device or the relative change in height of the device from start to stop of the device. In addition to the height of the device, a gesture may include the orientation of the device before, during, or after the gesture. For example, a gesture may include detecting the gravity vector indicating the arm is not beside the body in step **7505**, detecting upward motion in step **7510**, detecting halt of upward motion in step **7515**, detecting that the gravity vector points through the side of the device's base in step **7520**, and detecting a gesture in step **7525**. Any suitable functionality may be associated with the gesture of FIG. **75**, such as, for example, activating equipment paired with the device, turning on one or more lights in a room, or activating equipment near the device.

[0161] In particular embodiments, a gesture may include interacting directly with the body or band of a wearable device. For example FIG. **76** illustrates a gesture involving contact with a touch-sensitive area of a band worn about the user's wrist. The gesture may include detecting that the device is not in a locked state in step **7605**, detecting an absence of touch on a band in step **7610**, detecting touch on the band in step **7615**, decoding the position of the ouch in step **7620**, and detecting a gesture in step **7625**. FIG. **77** illustrates that touches in multiple positions may be determined to be a single gesture, such as, for example, to unlock a device or aspects of the device. The gesture may include detecting that the device is not in a locked state in step **7705**, detecting an absence of touch on a band in step **7710**, detecting touch on the band in step **7715**, decoding the position of the ouch in step **7720**, decoding an action in step **7725**, and detecting a gesture in step **7730**. FIG. **78** illustrates that a gesture may include contacting a touch-sensitive area of a device and sliding across a touch-sensitive area while maintaining contact with the device. The gesture may include detecting that the device is not in a locked state in step **7805**, detecting an absence of touch on a band in step **7810**, detecting touch on the band in step **7815**, detecting movement of the touch point(s) in step **7820**, decoding relative motion in step **7825**, and detecting a gesture in step **7830**. In particular embodiments, a gesture may include the duration of contact, physical area of contact (e.g. with one finger or two fingers), the sequence of contact, pressure generated by contact, or any other suitable contact-related attribute. While FIGS. **76-78** illustrate contact with a touch-sensitive area on a band, this disclosure contemplates that a gesture may involve contact on a touch-sensitive area on any suitable location of the device, such as the device band, ring, display, or any suitable combination thereof. For example, FIGS. **79-80** illustrate contact with touch sensitive areas on a ring of the device, similar to the gestures of FIGS. **77-78**. For example, a gesture may include detecting that the device is not in a locked state in step **7905**, detecting lack of touch on a ring in step **7915**, detecting touch on the ring in step **7920**, and detecting a gesture in step **7925**. As another example, a gesture may include detecting that the device is not in a locked state in step **8005**, detecting lack of touch on a ring in step **8010**, detecting touch on the ring in step **8015**, detecting movement of the touch point in step **8020**, decoding relative motion in step **8025**, and detecting a gesture in step **8030**. FIG. **81** illustrates a gesture involving multi-touch contact with a touch-sensitive area of a device face, and detecting subsequent motion of the contact points, caused by, e.g., motion of the fingers contacting the touch-sensitive area or by movement of the wrist/hand on which the device is worn. The gesture may include detecting that the device is not in a locked state in step **8105**, detecting lack of touch on a surface in step **8110**, detecting at least two fingers touching the surface in step **8115**, detecting movement of the touch points in step **8120**, decoding relative motion in step **8125**, and detecting a gesture in step **8130**. Motion of the wrist/hand may be detected by, e.g., inertial sensors in the device, allowing the different ways of moving touch points to be two distinct gestures. FIG. **82** illustrates a gesture involving initial contact with a device, which may detected by one or more proximity sensors on or in the device, or inertial sensors on or near the device. The gesture may involve detecting that the contact persists, indicating that, e.g., the user has put the device on. For example, the gesture may include detecting no contact with the rear or band proximity sensor in step **8205**, detecting contact by the proximity sensor in step **8210**, detecting that the contact persists in step **8215**, and detecting a gesture in step **8220**. The gesture of FIG. **82** may unlock or power on a sleeping device, or provide any other suitable functionality.

[0162] In particular embodiments, a gesture may include contact with skin near the device. FIG. **83** illustrates a gesture involving tapping on the skin near where the device is worn. The tapping may be detected by vibration sensors in the device. The tapping motion may be confirmed by, e.g., one or more acoustic sensors detecting sound generated by the tapping gesture. For example, the gesture may include detecting that the device is unlocked in step **8305**, detecting motion with a relatively high acceleration in step **8310**, detecting the sound of, for example, a tap in step **8315**, matching the motion or sound to a pattern in step **8320**, and detecting a gesture in step **8325**. FIG. **84** illustrates a gesture involving swiping of the skin near the device, which may be detected and confirmed by the sensors described in FIG. **83**, above. For example, the gesture may include detecting that the device is unlocked in step **8405**, detecting motion with a relatively high acceleration in step **8410**, detecting the sound of, for example, a tap in step **8415**, detecting the vibrations or sound of lateral movement on the skin in step **8420**, matching the motion or sound to a pattern in step **8425**, and detecting a gesture in step **8430**.

[0163] In particular embodiments, gestures may involve detecting metaphoric gestures made by the hand not wearing the device. For example, such gesture may be detected by, e.g., any suitable front-facing sensor on or near the display of the device oriented such that the hand not wearing the device is in the angle of view of the sensor. FIG. **85** illustrates an example gesture involving a front-facing sensor detecting motion of multiple fingers, such as tapping of the fingers. For example, the gesture may include determining that the device is in a predetermined orientation in step **8505**, detecting a fingertip in step **8510**, detecting motion of the fingertip in step **8515** or detecting a tap sound in step **8525**, and detecting one or more gestures in steps **8520** and **8530**. FIG. **86** illustrates an example gesture involving motion of a single finger. For example, the gesture may include determining that the device is in a predetermined orientation in step **8605**, detecting a fingertip in step **8610**, detecting motion of the fingertip in step **8615** or detecting a tap sound in step **8525**, and detecting one or more gestures in step **8620**. FIG. **87** illustrates a gesture involving detecting movement of a hand holding an object, detecting the motion of the object, locking on to the object, and then detecting subsequent motion of the object. As a specific example, the gesture may include detecting that the device is in a predetermined orientation in step **8705**, detecting a hand in step **8710**, detecting motion of the hand in step **8715**, detecting an additional object to be moving the hand in step **8720**, locking on the object in step **8725**, detecting motion of the object in step **8730**, and detecting a gesture in step **8735**. For example, an object may be a pen or other stylus-like implement, and the front-facing sensor on the device may detect writing motions of the implement to, e.g., generate/store text on the device or on another device communicating with the wearable device. The example of FIG. **87** may allow a user to generate drawings, notes, or other written content without actually generating written content on a display or other writing surface. As described more fully herein, any suitable gesture or combination of gestures may be used to impact or initiate augmented-reality ("AR") functionality, and may be used to perform tasks using AR functionality. For example, the gestures of FIGS. **85-87** may used to capture a user's interaction with a virtual keyboard, virtual mouse, or virtual touchscreen and those interactions may generate input on the wearable device or any other suitable paired device. While this disclosure describes specific examples of metaphoric gestures and object detection (and associated functionality), this disclosure contemplates any suitable metaphoric gestures, detection of any suitable objects, and such gestures associated with any suitable functionality.

[0164] In particular embodiments, a gesture may involve the entire appendage on which a device is affixed or worn. For example, FIGS. **88-92** illustrate example gestures involving motion of the arm on which the device is worn. The gestures may include detecting the initial position of the arm (e.g. via an accelerometer detecting the direction of the gravity vector), detecting the motion of the device (via the arm), detecting the corresponding change in the gravity vector, and detecting that the arm has stopped moving. Such gestures may also include detecting the duration of movement, the amount of movement (e.g. detecting a large radius of motion, confirming that the entire arm has moved), the acceleration of movement, or any other suitable movement-related attributes. As illustrated by FIGS. **88-92**, gestures may involve detecting arm movements above the head, to the front, to the side, to the back, or down from an initially-higher starting position. For example, a gesture may include detecting a gravity vector indicating a hand is on the side of the body in step **8805**, detecting upward movement of the hand in step **8810**, detecting that the gravity vector indicates the hand is above the head in step **8815**, detecting the hand stopping movement in step **8820**, and detecting a gesture in step **8825**. As another example, a gesture may include detecting a gravity vector indicating a hand is on the side of the body in step **8905**, detecting upward and forward movement of the hand in step **8910**, detecting that the gravity vector indicates the hand is horizontal in step **8915**, detecting the hand stopping movement in step **8920**, and detecting a gesture in step **8925**. As another example, a gesture may include detecting a gravity vector indicating a hand is horizontal in step **9005**, detecting the hand moving downward and backward in step **9010**, detecting that the gravity vector indicates the hand is by the side in step **9015**, detecting the hand stopping movement in step **9020**, and detecting a gesture in step **9025**. As another example, a gesture may include detecting a gravity vector indicating a hand is by the side of the body in step **9105**, detecting the hand moving upward and backward in step **9110**, detecting that the gravity vector indicates the hand is horizontal in step **9115**, detecting the hand stopping movement in step **9120**, and detecting a gesture in step **9125**. As another example, a gesture may include detecting a gravity vector indicating a hand is by the side of the body in step **9205**, detecting the hand moving upward and outward in step **9210**, detecting that the gravity vector indicates the hand is horizontal in step **9215**, detecting the hand stopping movement in step **9220**, and detecting a gesture in step **9225**. In particular embodiments, gestures may involve motion of the entire body rather than just of the appendage on which the device is worn.

[0165] In particular embodiments, a user may interact with the device via a variety of input mechanisms or types including, for example, the outer ring, touch-sensitive interfaces (e.g. the touch-sensitive layer), gestures performed by the user (described herein), or a speech interface (e.g. including voice input and speech recognition for applications including text input, communication, or searching). Additionally, in particular embodiments, a user may interact with a graphical user interface presented on a circular display of the device via any of the input mechanisms or types.

[0166] A user of the wearable electronic device may interact with the device (including, e.g., a graphical user interface presented on the circular display) by using the outer ring. In particular embodiments, the outer ring may be touch-sensitive, such that a user's touch on one or more portions of the ring may be detected as an input to the device and interpreted, causing one or more actions to be taken by the device (e.g. within a graphical user interface of the device). As an example, a touch-sensitive outer ring may be a capacitive ring or inductive ring, and a user of the device may perform any suitable touch gesture on the touch-sensitive ring to provide input to the device. The input may, for example, include swiping the ring with one finger, swiping the ring with two or more fingers, performing a rotational gesture with one or more fingers, or squeezing the ring. In particular embodiments, the outer ring may be rotatable, such that a physical rotation of the ring may serve as an input to the device. Additionally, in particular embodiments, the outer ring may be clicked (e.g. pressed down) or squeezed. Any of the embodiments of the outer ring may be combined, as suitable, such that the ring may be one or more of touch-sensitive,

rotatable, clickable (or pressable), or squeezable. Inputs from the different modalities of the outer ring (e.g. touch, rotation, clicking or pressing, or squeezing) may be interpreted differently depending, for example, on the combination of the modalities of input provided by a user. As an example, a rotation of the outer ring may indicate a different input than a rotation in combination with a clicking or pressing of the ring. Additionally, feedback may be provided to the user when the user provides input via the outer ring, including haptic feedback, audio feedback, or visual feedback, described herein.

[0167] FIG. **93**A illustrates an example of a user clicking (e.g. pressing down) on the outer ring, indicated by arrows **9310**. FIG. **93**B illustrates an example of a user squeezing the outer ring, indicated by arrows **9320**. FIG. **94**A illustrates an example of a user rotating the outer ring, such that content **9410** of a graphical user interface of the device changes in accordance with the rotation (e.g. to the right). FIG. **94**B illustrates an example of a user performing a rotating gesture on a touch-sensitive ring, without the ring itself rotating, such that content **9420** of a graphical user interface of the device changes in accordance with the rotation (e.g. to the right). FIG. **94**C illustrates an example of a user rotating the outer ring while simultaneously pressing or clicking the ring, such that content **9430** of a graphical user interface of the device changes in accordance with the rotation (e.g. to the right) and the pressing or clicking.

[0168] In particular embodiments, a touch-sensitive interface of the device (e.g. the touch-sensitive layer) may accept user touch input and allow the device to determine the x-y coordinates of a user's touch, identify multiple points of touch contact (e.g. at different areas of the touch-sensitive layer), and distinguish between different temporal lengths of touch interaction (e.g. differentiate gestures including swiping, single tapping, or double tapping). Touch gestures (described herein) may include multi-directional swiping or dragging, pinching, double-tapping, pressing or pushing on the display (which may cause a physical movement of the display in an upward or downward direction), long pressing, multi-touch (e.g. the use of multiple fingers or implements for touch or gesturing anywhere on the touch-sensitive interface), or rotational touch gestures. FIG. **95**A illustrates an example of a user tapping **9510** a touch-sensitive interface (e.g. the touch-sensitive layer) to provide input to the device. The precise x-y coordinates of the user's tapping may be determined by the device through input from the touch-sensitive interface (e.g. the touch-sensitive layer). FIG. **95**B illustrates an example of a user performing, respectively, a clockwise rotational gesture **9515**, a counter-clockwise rotational gesture **9520**, a vertical swipe gesture **9525**, and a horizontal swipe gesture **9530**. FIG. **95**C illustrates an example of a user touching the display (including a touch-sensitive layer with multi-touch sensing capability) using, respectively, one, two, or three points of contact **9535** (e.g. with one, two, or three fingers or implements) simultaneously. FIG. **95**D illustrates an example of a user performing touch gestures having multiple points of contact with the touch-sensitive interface. The user may, in this example, perform an expanding gesture **9540**, a pinching gesture **9545**, a clockwise rotational gesture **9550**, or a counter-clockwise rotational gesture **9555** with two fingers.

[0169] In particular embodiments, a graphical user interface of the device may operate according to an interaction and transition model. The model may, for example, determine how modes including applications, functions, sub-modes, confirmations, content, controls, active icons, actions, or other features or elements may be organized (e.g. in a hierarchy) within a graphical user interface of the device.

[0170] In one embodiment, the graphical user interface (GUI) includes multiple top-level screens that each correspond to a different mode or application (or sub-mode, function, confirmation, content, or any other feature) of the device. Each of these applications may be on the same level of the hierarchy of the interaction and transition model of the GUI. FIG. **96**A illustrates an example layout of a hierarchy within the GUI in which multiple top-level screens **9602-9606** and **9610-9614** each correspond to a different application, and one of the top-level screens **9608** (the home screen) corresponds to a clock. State transitions within the GUI may be events triggered by input from an input source such as the user of the device. An input from a user of the device or from another input source (e.g. via any of the variety of input mechanisms or types including the outer ring, touch-sensitive interfaces, gestures, speech, or sensors) may cause a transition within the GUI (e.g. from one top-level screen to another). For example, an input may cause the GUI to transition from the home screen **9608** (e.g. the clock) to an application (e.g. 3 or 4) or from an application to another application. If the user rotates the outer ring to the right, for example, the GUI may transition from the home screen **9608** to Application 4 **9610**, and if the user rotates the outer ring to the left, the GUI may transition from the home screen **9608** to Application 3 **9606**. In yet other embodiments, context (e.g. as determined by sensors or other input sources on the device) may cause the GUI to transition from the home screen to an application or from an application to another application.

[0171] In one embodiment, the model may include operability for differentiation of the "left" and "right" sides in relation to the home screen. As an example, one or more of the top-level screens may be associated with modes or applications (or other features) in the hierarchy of the interaction and transition model of the GUI that are fixed (e.g. always available to the user) or contextual or dynamic (e.g. available depending on context). The contextual screens may, for example, reflect the modes, applications, or functions most recently used by the user, the modes, applications, or functions most recently added (e.g. downloaded) by the user, ad-hoc registered devices (that may, for example, enter or exit the communication range of the device as it is used), modes, applications, or functions that are "favorites" of the user (e.g. explicitly designated by the user), or modes, applications, or functions that are suggested for the user (e.g. based on the user's prior activity or current context). FIG. **96**B illustrates an example layout of a hierarchy within the GUI in which contextual or dynamic applications **9616-9620** and fixed applications **9624-9628** are grouped separately, with the left side (in relation to the home clock screen **9622**) including contextual applications, and the right side including fixed applications. As an example, Dynamic Application 01 **9620** may be the most recently used application, and Dynamic Application 02**9618** may be the second most recently used application, and so forth.

[0172] In particular embodiments, the top level of the hierarchy of the interaction and transition model of the GUI may include only "faces," and the next level of the hierarchy may include applications (or any other features). As an example, the top level of the hierarchy may include a home screen (e.g. the clock), and one or more faces, each face corresponding to a different type of background, mode, or activity such as a

wallpaper (e.g. customizable by the user), weather information, a calendar, or daily activity information. Each of the faces may show the time in addition to any other information displayed. Additionally, the face currently displayed may be selected by the user (e.g. via any suitable input mechanism or type) or automatically change based on context (e.g. the activity of the user). The faces to the left of the home screen may be contextual, and the faces to the right of the home screen may be fixed. FIG. **97** illustrates an example layout of a hierarchy within the GUI in which the top level of the hierarchy includes faces **9710-9770** (including clock face **9740**) and the next level of the hierarchy includes applications **9715-9775**.

[0173] In particular embodiments, an input from a user of the device or an input from another input source (e.g. via any of the variety of input mechanisms or types including the outer ring, touch-sensitive interfaces, gestures, speech, or sensors), or a context of use of the device may cause a transition within the GUI from a screen at one level of the hierarchy of the interaction and transition model of the GUI to a screen at another level of the hierarchy. For example, a selection event or input by the user (e.g. a touch or tap of the display, voice input, eye gazing, clicking or pressing of the outer ring, squeezing of the outer ring, any suitable gestures, internal muscular motion detected by sensors, or other sensor input) may cause a transition within the GUI from a top-level screen to a screen nested one level deeper in the hierarchy. If, for example, the current screen is a top-level screen associated with an application, a selection event (e.g. pressing the ring) selects the application and causes the GUI to transition to a screen nested one layer deeper. This second screen may, for example, allow for interaction with a feature of the selected application and may, in particular embodiments, correspond to a main function of the selected application. There may be multiple screens at this second, nested layer, and each of these screens may correspond to different functions or features of the selected application. Similarly, a "back" selection input or event by the user (e.g. a double pressing of the outer ring or a touch gesture in a particular part of the display) may cause a transition within the GUI from one screen (e.g. a feature of a particular application) to another screen that is one level higher in the hierarchy (e.g. the top-level application screen).

[0174] FIG. **98**A illustrates an example of the operation of the interaction and transition model with respect to a function or a mode **9805** of a particular application of the device and the use or application of the function **9810**. As an example, if the application is a camera, the functions, modes, or other elements of the camera application may include picture mode, video mode (e.g. with a live view), and turning on or off a flash. The various functions, modes, or other elements may be accessed via transitions within a single layer of the model hierarchy. These intra-layer transitions may occur upon receiving or determining a particular type of transition event or input from an input source such as the user of the device (e.g. a rotation of the outer ring counterclockwise or clockwise), or upon determining a particular context of use of the device. In particular embodiments, a transition event input may also include, e.g., a touch or tap of the display, voice input, eye gazing, clicking or pressing of the outer ring, squeezing of the outer ring, any suitable gesture, internal muscular motion detected by sensors, or other sensor input. To select and use a function, mode, or other element of the application, the user may provide a particular type of selection event or input (e.g. a tap or touch of the display, a press or click of the outer ring, a particular gesture, or sensor input), causing an inter-layer transition within the GUI to a deeper layer of the hierarchy. As an example, to take a video, the user may tap a screen associated with the video mode feature of the camera application. Once in this deeper layer of the hierarchy, taking a video, the user may cause the GUI to transition between different options in that layer, if available (e.g. options related to video mode). In particular embodiments, the user may select one of the options in the deeper layer, causing the GUI to transition to an even deeper layer. As an example, once recording video in video mode, the user may again tap the display to transition the GUI to a deeper layer, which in this case may include the option to stop recording video. Additionally, the user may return to a higher layer of the hierarchy by providing a particular type of selection event or input (e.g. a "back" input, described herein). As an example, once recording video in video mode, the user may touch a particular "back" portion of the display, causing video recording to be canceled and causing the GUI to transition to the screen associated with the video mode feature of the camera application (e.g. in the features layer of the hierarchy). The interaction and transition model hierarchy of the GUI may have any number of layers and any number of elements (e.g. functions or content) within a single layer. FIG. **98**B illustrates an example of the operation of the interaction and transition model with respect to content **9815** on the device. In this example model, content may behave similarly to an application, except that if the user selects the content **9815** (e.g. a photo) and the GUI transitions to a deeper layer in the hierarchy, the first option **9820** in a menu of options related to the content may be shown (e.g. options such as deleting the photo or sharing the photo). FIG. **98**C illustrates an example of the operation of the interaction and transition model with respect to a control **9825** on the device. A control element may function like a knob, in that it may modify a value over a range of possible values. User input to the device (e.g. rotating the outer ring to the right or left) may modify the value or state **9830** associated with the control element **9825**. The value modified by a control element may be substantially continuous in nature (e.g. the zoom level of a camera, or the volume level of a television) or may be substantially discrete in nature (e.g. the channel of a television). In particular embodiments, in cases where the value modified by a control is discrete in nature, a particular user input (e.g. pressing the outer ring) may "commit" the selection of the value. FIG. **98**D illustrates an example of the operation of the interaction and transition model with respect to an application **9835** on the device and a main function **9840** of the application. As an example, each mode or function of the device (e.g. camera or augmented reality functions) may be an application on the device. Transitions within a single layer (e.g. performed upon receiving a particular user input such as a rotation of the outer ring) allow the user to change applications, modes, or functions of the device. Transitions between layers (e.g. performed upon receiving a particular user input such as a tap on the display) allow the user to enter deeper layers (or exit deeper layers) of the hierarchy associated with the selected application, mode, or function.

[0175] FIG. **98**E illustrates an example of the operation of the interaction and transition model with respect to an action **9845** (e.g. within an application) on the device. As an example, within the camera application, a captured image may be selected, and one or more actions may be available for

the selected image, such as deleting the image, sharing the image on FACEBOOK, sharing the image on TWITTER, or sending an e-mail with the image. In this example, GUI transitions within the "action" layer (e.g. performed upon receiving a particular user input such as a rotation of the outer ring) allow the user to view different actions to take. Transitions between layers (e.g. performed upon receiving a particular user input such as a tap on the display) allow the user to enter deeper layers (or exit deeper layers) of the hierarchy associated with the selected action. In this example, the deeper layer entered by selecting an action **9845** shows secondary information **9850** or a confirmation (e.g. that the application is sending the image information to a selected sharing service). A confirmation **9855** (e.g. that the image has been sent) may also be shown in this deeper layer. The GUI may automatically transition back to a higher layer (e.g. the action layer). There may, however, be a deeper layer of the hierarchy including the confirmation information, and this deeper layer may be entered by the GUI upon user input or automatically. FIG. **98**F illustrates an example of the operation of the interaction and transition model with respect to an icon (e.g. an active icon **9860** including a top-level on/off option) and the switching of the state of the icon **9865**. As an example, a television communicatively paired with the device may be indicated by an active icon, for example, a television screen. In this example, GUI transitions within the device/application top layer (e.g. performed upon receiving a particular user input such as a rotation of the outer ring) allow the user to view different applications, device, or other features. The television may appear in a menu in the GUI of the device even when the television is off, but the television must be turned on before it may be used. If the user selects the television (e.g. by tapping on the display when the television icon is displayed by the GUI) when it is off **9860**, the GUI may transition to a state in a deeper layer of the interaction and transition model hierarchy in which the television is turned on **9865**. When the television is turned on, the icon associated with the television (displayed, for example, in the top layer of the model in the GUI) **9870** may change to directly represent that the television has been turned on **9875**, as illustrated in FIG. **98**G. If the user again selects the television (now on), the GUI may transition to an even deeper layer of the hierarchy in which functions or capabilities of the television (e.g. volume or channel changing) are exposed. In particular embodiments, the option to turn the television off again may be the first menu item in this deeper layer of the hierarchy, to enable quick access to the off function (e.g. in case the user has accidentally turned on the television). In particular embodiments, if the user selects the television when it is off, the television may be turned on and the icon associated with the television may change to directly represent that the television has been turned on without the GUI transitioning to a different layer of the hierarchy or to a different user interface. The active television icon may, therefore, directly indicate within the top level of the hierarchy (e.g. a main menu) the state of the paired television.

[0176] FIG. **99** illustrates an example of the interaction and transition model hierarchy of a GUI for an image capture application. In this example, the first screen **9902** arrived at after selection of the application (at screen **9900**) may correspond to a "live view" function of the application. Other fixed features of the image capture application, including video mode **9904**, zoom **9906**, or flash **9908**, may be available to the right of the home main function screen **9902** of the selected application. Dynamically or contextually available features (e.g. captured images **9910**) of the selected application may be available to the left of the home main function screen. A selection event at this functional layer of the hierarchy may cause a transition within the GUI to another nested layer even deeper within the hierarchy. If, for example, the user selects the "zoom" function, the GUI may transition to a screen **9912** in which the user may control the zoom setting of a camera with any suitable input (e.g. a rotation of the outer ring to the right to increase zoom or a rotation of the outer ring to the left to decrease zoom). Similarly, the user may be able to control the state of different features (e.g. turning a flash feature on or off **9914**, or switching from a picture mode to a video mode **9916**), browse content (e.g. **9918-9922**), enter a deeper layer of the hierarchy in which actions **9924-9930** may be taken, or enter yet another, even deeper layer of the hierarchy in which confirmations **9932-9938** are provided once an action is selected.

[0177] In particular embodiments, an interaction layout may structure an interaction and transition model of a GUI of the device. An interaction layout may be applied to any suitable interaction model and need not be dependent on any specific type of motion or animation within a GUI of the device, for example. Although specific examples of interaction layouts are discussed below, any suitable interaction layout may be used to structure an interaction and transition model.

[0178] As one example, a panning linear interaction layout may structure an interaction and transition model of a GUI of the device. In a panning-linear-type GUI, elements or features within a layer may be arranged to the left and right of the currently displayed element or feature. User input such as a rotation of the outer ring in a clockwise or counterclockwise direction navigates within a single layer of the model hierarchy. As an example, a rotation of the outer ring clockwise one rotational increment may display the element or feature to the right (e.g. the next element), and a rotation counterclockwise one rotational increment may display the element or feature to the left (e.g. the previous element). In particular embodiments, a fast rotation clockwise or counterclockwise may cause the GUI to perform accelerated browsing. In such an embodiment, a single turn may cause the GUI to transition through multiple elements or features, rather than a single element or feature, as described herein. Different user input may navigate between layers (e.g. either deeper layers or higher layers) in the model hierarchy. As an example, if the user touches or taps the touch-sensitive layer of the display, the GUI may transition one layer deeper in the model hierarchy (e.g. confirming the user's selection or providing options related to the selection). Any suitable input by the user may cause the GUI to transition between layers in the model hierarchy, either in place of or in addition to touch- or tap-based input.

[0179] As another example, if the user presses a particular region of the touch-sensitive layer of the display (e.g. designated as a "back" button), or if the user double-taps the touch-sensitive layer of the display, the GUI may transition one layer higher in the model hierarchy (e.g. to the previous layer). If, for example, the user performs a long press of the display or screen, the GUI may transition back to the home screen (e.g. a clock). Without additional user input, the GUI may also transition back to the home screen after a predetermined period of time (e.g. a timeout period). As described herein, as a user begins, for example, to rotate the

outer ring in a clockwise or counterclockwise fashion, the GUI transitions within the same layer, and the next user interface element or feature (e.g. a breadcrumb icon in the same layer) to the right or left, respectively, may begin to appear while the current user interface element or feature may begin to disappear.

[0180] FIG. **100**A illustrates an example of the panning linear interaction layout. In this example, GUI elements **10001**, **10002**, **10003**, and **10004** are in the same layer of the interaction and transition model hierarchy of the panning-linear-type GUI. GUI elements **10002**A, **10002**B, and **10002**C are elements in a second, deeper layer of the hierarchy and are sub-elements of element **10002**. As an example, the first layer may include devices paired with the device—element **10001** may represent an automobile, element **10002** may represent a television, element **10003** may represent a mobile phone, element **10004** may represent a home thermostat. Element **10002**A may be a volume control element for the television, element **10002**B may be a channel control element for the television, and element **10002**C may be a picture control element for the television. As yet another example, the GUI may transition one layer deeper in the hierarchy if the user clicks the ring (e.g. presses down on the ring once), and then sub-elements in the deeper layer may be panned by rotating the ring. Alternatively, the user may pan the sub-elements in the deeper layer by rotating the ring while simultaneously pressing down on the ring. The device may include a switch to select how the user input is used to navigate between layers.

[0181] As another example, a panning radial (or panning circular) interaction layout may structure an interaction and transition model of a GUI of the device. In a panning-radial-type GUI, elements or features in a layer may be arranged above and below the currently displayed element or feature. User input such as a rotation of the outer ring in a clockwise or counterclockwise direction navigates between layers of the model hierarchy. As an example, a rotation of the outer ring clockwise one increment may cause the GUI to transition one layer deeper in the model hierarchy (e.g. entering a particular application's layer or confirming selection of the application), and a rotation counterclockwise one increment may cause the GUI to transition one layer higher in the model hierarchy (e.g. exiting a particular application's layer to the previous layer). In particular embodiments, a fast rotation clockwise or counterclockwise may cause the GUI to perform accelerated browsing, as described herein. In such an embodiment, a single rotational increment may cause the GUI to transition through multiple layers of the hierarchy, rather than a single layer. Different user input may navigate within a single layer in the model hierarchy. As an example, if the user touches or taps the touch-sensitive layer of the display, the GUI may transition to the next element or feature (e.g. the element below the currently displayed element). As another example, if the user presses a particular region of the touch-sensitive layer of the display (e.g. designated as a "back" button), or if the user double-taps the touch-sensitive layer of the display, the GUI may transition to a previous element or feature (e.g. the element above the currently displayed element). If, for example, the user performs a long press of the display or screen, the GUI may transition back to the home screen (e.g. a clock). Without additional user input, the GUI may also transition back to the home screen after a predetermined period of time (e.g. a timeout period). As described herein, as a user begins, for example, to rotate the outer ring in a clockwise or counterclockwise fashion, the GUI transitions to a different layer, and the next user interface element or feature (e.g. in a different layer) may begin to appear while the current user interface element or feature may begin to disappear. FIG. **100**B illustrates an example of the panning radial interaction layout. In this example, GUI elements **10001**, **10002**, **10003**, and **10004** are in the same layer of the interaction and transition model hierarchy of the panning-radial-type GUI. GUI elements **10002**A, **10002**B, and **10002**C are elements in a second, deeper layer of the hierarchy and are sub-elements of element **10002**. As before, the first layer may include devices paired with the device—element **10001** may represent an automobile, element **10002** may represent a television, element **10003** may represent a mobile phone, element **10004** may represent a home thermostat. Element **10002**A may be a volume control element for the television, element **10002**B may be a channel control element for the television, and element **10002**C may be a picture control element for the television.

[0182] As yet another example, an accordion-type interaction layout may structure an interaction and transition model of a GUI of the device. In an accordion-type GUI, elements or features of multiple layers may be arranged in a circular list structure. For example, rotating within the list structure (e.g. by rotating the outer ring) in a first direction past a screen associated with the last element or feature in that direction (e.g. the last fixed application of the device) may cause the GUI to transition to a screen associated with the last element or feature in a second direction (e.g. the least-recently used contextual application of the device). Continuing to rotate in the first direction may cause the GUI to transition through screens associated with contextual applications in "reverse" order (e.g. from least-recently used to most-recently used). Similarly, rotating in the second direction past the screen of the least-recently used contextual application may cause the GUI to transition to the screen associated with the last fixed application, and continuing to rotate in the second direction may cause the GUI to transition through the screens of the fixed applications in reverse order (e.g. from the last fixed application to the first, adjacent to the home screen). In an accordion-type GUI, the element or feature currently displayed may be "expanded" (e.g. if selected by the user) such that its sub-elements or sub-features may become part of the single-layer list structure. In particular embodiments, an element or feature with sub-elements may indicate (when displayed) that it has sub-elements through, for example, visible edges of the sub-elements. User input such as a rotation of the outer ring in a clockwise or counterclockwise direction navigates within a single layer of the model, which may include elements or features, as well as sub-elements or sub-features of a selected element or feature. As an example, a rotation of the outer ring clockwise one increment may display the element or feature to the right (e.g. the next element), and a rotation counterclockwise one increment may display the element or feature to the left (e.g. the previous element). In particular embodiments, a fast rotation clockwise or counterclockwise may cause the GUI to perform accelerated browsing. In such an embodiment, a single rotational increment may cause the GUI to transition through multiple elements or features, rather than a single element or feature. Different user input may cause the selection and expansion of an element or feature in the model. As an example, if the user touches or taps the touch-sensitive layer of the display, the GUI may expand the displayed feature or element within the existing layer and

transition to a sub-element or sub-feature. As another example, if the user presses a particular region of the touch-sensitive layer of the display (e.g. designated as a "back" button), or if the user double-taps the touch-sensitive layer of the display, the GUI may collapse the expanded sub-elements or sub-features and transition to an element or feature in the list. If, for example, the user performs a long press of the display or screen, the GUI may transition back to the home screen (e.g. a clock). Without additional user input, the GUI may also transition back to the home screen after a predetermined period of time (e.g. a timeout period). As described herein, as a user begins, for example, to rotate the outer ring in a clockwise or counterclockwise fashion, the GUI transitions within the same layer, and the next user interface element or feature (e.g. a breadcrumb icon in the same layer) to the right or left, respectively, may begin to appear while the current user interface element or feature may begin to disappear. FIG. **100**C illustrates an example of the accordion-type interaction layout. In this example, GUI elements **10001**, **10002**, **10003**, and **10004** are in the same layer of the interaction and transition model of the accordion-type GUI. Because element **10002** has been selected by the user, GUI sub-elements **10002**A, **10002**B, and **10002**C are expanded and also included in the list structure in the same layer of the model. Thus, the GUI may transition from sub-element **10002**C to either sub-element **10002**B or directly to element **10003**. If, however, the user desires to collapse the sub-elements (e.g. through a "back" input such as tapping the screen associated with element **10002** again), then the list structure will only include GUI elements **10001**, **10002**, **10003**, and **10004** again.

[0183] In particular embodiments, the GUI may navigate to a home screen based on input received by a user of the device. The user input may include, for example, pressing and holding (e.g. a long press) the touch-sensitive layer, pressing and holding the display, pressing (e.g. clicking) and holding the outer ring, squeezing and holding the outer ring, covering the face (e.g. the display) of the device, covering a particular sensor of the device, turning the face of the device in a downward direction, pressing a software button (discussed herein), pressing a hardware button on the device, or shaking the device (or any other suitable gesture). Any of these inputs or any variation of these inputs (including, for example, shorter durations) may be used as user inputs to go "back" within an interaction and transition model. FIGS. **101**A-**101**B illustrate examples of a "back" software button layout in the GUI. In FIG. **101**A, receiving user touch input in the bottom portion **10110** of the display causes the GUI to confirm a selection or transition one layer deeper in the model hierarchy. Receiving user touch input in the top portion **10120** of the display causes the GUI to transition "back" or one layer higher in the model hierarchy. FIG. **101**B illustrates a similar layout, with the "back" region **10130** including a breadcrumb icon **10135** to indicate to the user where navigating "back" will transition. In particular embodiments (e.g. when the touch-sensitive layer is operable to determine precise x-y coordinates of a touch), any region of the display may be designated as a "back" region, a "confirm/select" region, or any other suitable functional region.

[0184] In particular embodiments, the GUI of the device may display particular types of content including, for example, lists. FIG. **102**A illustrates an example of the GUI displaying a vertical list of items. An input from the user (e.g. any suitable input mechanism or type) may cause a selection frame **10210** of the GUI to move through elements of the vertical list. As an example, if the user rotates right in a clockwise direction, the selection frame **10210** may move from the top of the vertical list toward the bottom of the vertical list. Each rotational increment of the outer ring (e.g. if the outer ring moves in discrete increments), causes the selection frame **10210** to move one item within the list. In the example of FIG. **102**A, as the user rotates the ring clockwise, the displayed items of the list remain constant, and the selection frame **10210** moves downward through items of the list. In other embodiments, the selection frame may remain constant (e.g. in the center of the display), and items of the list may move upward or downward (e.g. one item at a time), depending on the direction of the ring's rotation. FIG. **102**B illustrates an example of the GUI displaying a horizontal list of items. An input from the user (e.g. any suitable input mechanism or type) may cause a selection frame **10210** of the GUI to move through elements of the horizontal list. As an example, if the user rotates right in a clockwise direction, the selection frame **10210** may move from the left of the horizontal list toward the right of the horizontal list. Each rotational increment of the outer ring (e.g. if the outer ring moves in discrete increments), causes the selection frame **10210** to move one item within the list. In the example of FIG. **102**B, as the user rotates the ring clockwise, the selection frame **10210** remains constant in the center of the display, and items of the list move toward the left (e.g. one item at a time) in response to the clockwise rotation. In other embodiments, the displayed items of the list remain constant, and the selection frame moves left or right through items of the list, depending on the direction of rotation of the outer ring.

[0185] In particular embodiments, the GUI of the device may display vertically or horizontally continuous (or substantially continuous) content including, for example, charts or text. In particular embodiments, an input from the user (e.g. any suitable input mechanism or type) may cause a selection indicator of the GUI to move through the continuous content. In other embodiments, an input from the user may cause the content to move into and out of the display in a horizontal direction, vertical direction, or any other direction mapped to the user's input (and the selection indicator, if present, may remain in a constant position). In the example of FIG. **102**C, a temperature chart is displayed. As the user rotates the outer ring in a clockwise fashion, the selection indicator **10220** remains in the center of the display, and the content moves into the display from the right and out of the display toward the left. In the example of FIG. **102**D, a portion of a larger piece of text **10230** is displayed. As the user rotates the outer ring in a clockwise fashion, additional text enters the display from the bottom and exits the display toward the top. FIGS. **103**A-**103**D illustrate an example calendar application displayed in GUI of the device. In FIG. **103**A, a user may click or press the outer ring (indicated by arrow **10305**), causing the GUI to display a circular menu **10310** with options "Go Up," "Weekly" (the default setting), "Monthly," and "Daily." In FIG. **103**C, the user may again click or press the outer ring (indicated by arrow **10305**), confirming selection of "Weekly" and causing the GUI to display the weekly view **10320** of the user's calendar.

[0186] In particular embodiments, the GUI may display content that is of a size larger than the display. In such embodiments, the GUI may scale or crop (or otherwise shrink or fit) the content so that all of the content may be displayed within the display at one time. In other embodiments, the GUI

does not alter the size of the content, and instead provides the ability for the user to pan through the content one portion at a time, for example using scrolling (described herein).

[0187] In particular embodiments, the device includes the circular display, and the GUI includes circular navigation and menu layouts. This disclosure contemplates any shape for the display, however, and any suitable navigation or menu layout for the GUI. The menu layout may provide a user a visual indication of where the user is located within an interaction and transition model hierarchy of the GUI, for example. The menu layout may also provide visual indicators that allow the user to differentiate between different types of menu items, as well as show an overall view of menu options. Additionally, the menu may be displayed over any suitable background or content of the device.

[0188] FIG. **104** illustrates an example circular menu layout in which each segment **10410** represents one item or option in the menu and visual gaps such as **10420** separate the items from one another. The default or currently selected item **10430** is on the top of the visual display (but may be anywhere on the display), and may remain at the top of the display as the user orients the device display in different ways during use. FIGS. **105**A-**105**B illustrate an example of browsing the items in a circular menu. The user may provide input such as a clockwise rotation of the outer ring, and in response to this user input, the next item in the menu **10520** (e.g. to the right of the currently selected item **10510**) may be highlighted for selection. The content in the center of the display **10530** may automatically change to reflect the user's rotation input or may, in particular embodiments, change only after the user provides another input (e.g. pressing or clicking the outer ring once the desired menu item is highlighted). FIGS. **105**C-**105**D illustrate an example of browsing a circular menu by rotating the outer ring, causing the next item in the menu **10550** (e.g. clockwise or to the right of the currently selected item **10540**) to be highlighted for selection. In this example, the user's input also causes the rotation of a central "pointer" **10560** that points at the highlighted menu segment corresponding to the currently-selected menu item. In this example, the content in the center of the display automatically changes to reflect the user's rotation.

[0189] FIGS. **106**A-**106**C each illustrate different alignments and arrangements of a circular menu layout for the GUI of the device. The circular menu may, for example, be displayed directly on the border of the display (as shown in FIG. **106**A) or may be shown further inside the display, or as an overlay over a background of the device (shown in FIGS. **106**B-**106**C). FIGS. **107**A-**107**C illustrate other forms and alignments of a circular menu layout for the GUI of the device. As examples, the menu may consist of line segments (of various possible sizes) arranged in a circle **10710**, line segments arranged in a semicircle **10720**, or dots arranged in a circle or semi-circle, **10730** or **10740**. In particular embodiments, the visual indicator of the currently selected or default menu item **10732** may remain at the top center of the display, and the visual indicators of items in the menu **10734** may shift left or right based on user input (FIG. **107**C). In other embodiments, the visual indicator of the currently selected or default item **10732** may move through the indicators of the items of the menu, which remain fixed in position (FIG. **107**B). In particular embodiments, instead of segments or dots, the visual indicators of items in the menu may be icons (e.g. breadcrumb icons) associated with the menu items. FIG. **108** illustrates that the menu layout need not be circular and may be any suitable layout, including a layout in which indicators of menu items **10810** are scattered throughout the display. With user input (e.g. a rotation of the outer ring), different items may be selected according to their position in the menu layout. As an example, if the user rotates in a clockwise manner, the next menu item **10820** in a clockwise direction may be selected.

[0190] FIGS. **109**A-**109**C illustrate different menu layouts with respect to menu items to the "left" and to the "right" (e.g. in the interaction and transition model hierarchy) of the currently selected or displayed menu item **10915**. In FIG. **109**A, all menu items **10910** are equally distributed on the circular menu around the display. In FIG. **109**B, the menu includes a gap which indicates a differentiation of items **10910** to the left and items to the right of the currently-displayed or selected menu item **10915** (e.g. in accordance with the interaction and transition model described herein). FIG. **109**C illustrates an example in which there are more items **10910** to the left than to the right of the currently-selected or displayed item **10915**, so that the left-hand segments of the circular menu are adjusted in size to accommodate the number of items available for selection. In the case of a large number of menu items (e.g. beyond a particular threshold such as 40 captured images), the segments of the circular menu may disappear, and the visual indicator presented to the user may be a scroll bar **11020** that allows the user to circularly scroll through the various menu items, as illustrated in FIG. **110**A. In other embodiments, a similar scrollbar-type visual indicator **11020** may allow the user of the device to manipulate an absolute or fixed value (e.g. a camera zoom level) over a fixed range of values **11030**, as illustrated in FIG. **110**B. In yet other embodiments, the length of a scrollbar-type visual indicator may show the user the level of a certain value. For example, if the user is controlling the volume of a television using the outer ring of the device, as the user turns the ring (e.g. clockwise) to increase the volume level, the visual indicator **11120** will grow longer, until it encircles or nearly encircles the entire display, as illustrated in FIGS. **111**A-**111**C.

[0191] In particular embodiments, the GUI may display both an item of reference or background content as well as an indication of an available action or function to be performed with respect to the reference or background content. FIG. **112** illustrates example layouts within the GUI of reference content and contextual overlay actions or functions. Different types of layouts (e.g. including those illustrated) may be selected based on the different types of reference or background content presented, for example, to minimize obscuring the reference or background content. For example, if the reference or background content is a picture of a person, an overlay that does not obscure the center of the photo may be selected. In particular embodiments, the perceptual brightness of the pixels of the reference or background content (e.g. behind the overlay) may be determined on a pixel-by-pixel basis. In cases where the contrast between the contextual overlay and the reference or background content (e.g. an image) is too low (e.g. based on a pre-determined threshold), a blurred drop shadow that pushes the underlying colors in the opposite direction may be used. An example algorithm may include determining the pixels under the overlay, reducing their saturation, taking the inverse of the visual brightness (e.g. such that colors remain the same but the brightness is selected to produce contrast), blur, and create a composite between the underlying reference or background content and the overlay. FIGS. **113**A-**113**C illustrate examples **11310**-

11350, of contextual overlays composed with background or reference content (here, images captured by a camera of the device). As illustrated, the contextual overlay may allow the user to perform actions or functions (e.g. deleting an image **11130** or sharing an image **11325**, searching for coffee **11330**, searching for restaurants **11340**, or making a location a "favorite" location **11350**), provide confirmation to the user (e.g. that an image has been shared **11320**), or provide any other type of information to the user. In particular embodiments, contextual overlays may be used anywhere within a menu layout of a GUI except for the top level of the interaction and transition model hierarchy.

[0192] In particular embodiments, icons displayed in the GUI of device may optimize the energy or battery usage of the device. As an example, an icon may include primarily black background with the icon itself being composed of thin white strokes. This may allow for the amount of white color on the display screen to be very low, allowing for reduced energy consumption of the display while the GUI is used. The icons displayed in GUI may also include real-time notifications. For example, a mobile phone icon may include a notification with the number of new voicemails, an e-mail icon may include a notification with the number of new e-mails, a chat icon may include a notification with the number of new chat messages, and a telephone icon may include a notification with the number of missed calls. In particular embodiments, the GUI of the device only displays colors other than black and white for user-generated content (e.g. pictures, files, contacts, notifications, or schedules). Other information, including menu items, may be displayed in black and white.

[0193] In particular embodiments, as the GUI transitions from one element (e.g. feature, content item, or icon) to another (e.g. upon receiving input from a user), the GUI may display visual transition effects. These transition effects may depend, for example, on the type of input received from a user of device. As an example, a single touch on the display may trigger particular transition effects, while a rotation of the outer ring may trigger a different (potentially overlapping) set of transition effects.

[0194] In particular embodiments, a user's touch input on the touch-sensitive layer may trigger transition effects including center-oriented expansion, directional sliding, and scaling in or out. FIG. **114**A illustrates center-oriented mode or function expansion or scaling up. FIG. **114**B illustrates center-oriented mode or function collapsing or scaling down. FIG. **115**A illustrates center-oriented scaling up of an icon. FIG. **115**B illustrates center-oriented scaling down of an icon. FIG. **116**A illustrates an example of center-oriented icon scaling up with a twisting motion. FIG. **116**B illustrates an example of center-oriented icon scaling down with a twisting motion. FIG. **117**A illustrates an example of center-oriented unfolding and expansion outward of an icon. FIG. **117**B illustrates an example of center-oriented folding and collapsing inward of an icon. FIG. **118**A illustrates an example of text vertically sliding into the display, where the text is revealed by unmasking FIG. **118**B illustrates an example of text horizontally sliding in from the left to the right of the display. FIG. **118**C illustrates an example of text horizontally sliding in from the left to the right of the display within a masked region (e.g. a contextual overlay). FIG. **119**A illustrates a horizontal slide transition from right to left for content or an icon. FIG. **119**B illustrates a horizontal slide transition from right to left, with fading effects; the icon or content exiting the screen fades out gradually once it reaches the screen's border, and the icon or content entering the screen fades in gradually as it crosses the screen's border. FIG. **119**C illustrates an example of a horizontal slide transition from right to left with scaling effects; the content or icon exiting the screen is shrunk down, and the content or icon entering the screen is scaled up to full size.

[0195] In particular embodiments, a user's rotation of the outer ring may trigger visual transition effects including zooming, directional sliding, blurring, masking, page folding, rotational movement, and accelerated motion. FIG. **120**A illustrates an example of a transition in response to a low-acceleration rotation of the outer ring. In this example, a single rotational increment may correspond to a single item, such that one turn (e.g. rotational increment) counterclockwise causes the next element (e.g. icon or content item) to enter the screen from the left toward the right, and no scaling of elements occurs. FIGS. **120**B-**120**C together illustrate an example of a transition in response to a high-acceleration rotation of the outer ring. In this example, a single turn (e.g. rotational increment) counterclockwise causes the GUI to pan quickly through multiple elements (which may scale down in size, enter the screen from the left, and exit the screen from the right) until the user stops turning the ring. When the user stops turning the outer ring, the element may scale up to normal size, and a single icon or content item may fill the display. FIG. **121**A illustrates an example of a transition within the GUI in which content is zoomed-in in response to rotation of the outer ring. FIG. **121**B illustrates an example of a transition within the GUI in which a first screen **1** "folds over" in an animation, resulting in a second screen **2** (e.g. for the next feature or content item) being displayed to the user.

[0196] In particular embodiments, the GUI of the device may include a physical model that takes into account motion of the user and produces visual feedback reflecting the user's movements. As an example, once there is activation input (e.g. in the form of a particular gesture) by the user, the user's motion may be continuously tracked through input from one or more of the sensors of the device. The visual feedback may reflect the user's motion in the user interface, while the underlying content stays still, so that gestures may be registered and parallax may be used to distinguish between UI features or controls and underlying content. In particular embodiments, the physical model may include a generalized spring model with damping. In such a model, items may be arranged in layers. Deeper layer may have a "stiffer" spring in the physical model holding items in place. This may cause bottom layers of the user interface to move slightly when the device is moved, while top layers may move more, creating a sense of parallax. Additionally, the spring model may include damping, which causes motion to lag, creating a more fluid, smooth motion. FIG. **122** illustrate an example of using a physical model in the GUI. The user wears the device **100** on her arm. Once the user moves her arm in a downward fashion, the icon **12210** displayed on the screen (e.g. a light bulb) moves in a manner reflecting the user's movement. The underlying content (e.g. the background image) on the screen does not move, however. This type of floating icon or menu item may, for example, be helpful when the display is of a size that does not allow for many icons or menu items to be displayed simultaneously due to visual crowding. Additionally, this type of floating behavior may also be used with notification means for presenting an event to the user.

[0197] In particular embodiments, the GUI of the device may include faces as default screens or wallpapers for the

device, and these faces may be part of an interaction and transition model hierarchy (e.g. in the top layer of the hierarchy or as a home screen). As described herein, these faces may be changeable applications or modes that may automatically respond contextually to a user's activity. As an example, the faces may change depending on the user's environment, needs, taste, location, activity, sensor data, gestures, or schedule. The availability of a face (or the transition in the GUI from one face to another) may be determined based on contextual information. As an example, if the user has an upcoming event scheduled in her calendar, the face of the device may change to a calendar face that displays the upcoming event information to the user. As another example, if the user is determined to be in the vicinity of her home (e.g. based on GPS data), the face of the device may change to a face associated with a home-automation application. As yet another example, if the user is determined (e.g. based on various biometric sensors such as heart rate or arousal sensors, or based on accelerometers) to be moving vigorously, the face of the device may change to a fitness mode, showing the user's measured pulse, calories burned, time elapsed since the activity (e.g. a run) began, and the time. Any suitable sensor data (e.g. from sensors including biometric sensors, focus sensors, or sensors which may determine a user's hand position while driving a car) may be used to determine a context and appropriate face to display to the user. The user's historical usage of the device (e.g. a particular time of day when the user has used a fitness application, such as in a fitness class) may also determine which face is displayed on the device. As an example, the device may anticipate the user's need for the fitness mode at the particular time of day when the user tends to exercise. Contextual faces may also be associated with the suppression of notifications (e.g. if the user is determined to be driving or if the device is not being worn) or a change in how notifications are expressed (e.g. visually, or audibly). In particular embodiments, the faces of the device need not be associated with any application on the device and may be wallpapers or backgrounds on the display of the device. Faces may be dedicated to specific channels of information (e.g. calendar feeds, health or activity feeds, notifications, weather feeds, or news). As an example, a severe weather notification or alert (received, e.g., from a weather feed) may cause the weather face to be displayed on the display along with the notification. Faces may display the time (e.g. in analog or digital format) regardless of the type of face. The faces may be customizable by the user. The user's customizations or tastes may be input explicitly by the user (e.g. to management software on the device or a paired device) or learned directly by the device (e.g. using sensor and usage data to create a model over time). FIG. **123** illustrates example faces, including an analog watch **12310**, an analog watch with a circular menu layout **12320**, a health-mode face **12330**, and a weather face **12340**. FIG. **124** illustrates an example set of faces **12410-12440** for the device in which calendar and appointment information is displayed.

[0198] In particular embodiments, the device may be worn on a limb of a user (without obscuring the user's face and without requiring the user to hold the device) and may include augmented reality (AR) functionality. This AR functionality may be based on the use of body motion for aiming a camera of the device, which may allow for aiming with higher accuracy due to a user's sense of proprioception. This type of system may allow the user of the device to view an object in the real world at the same time that the user views a version of the object (e.g. captured by a camera of the device) on the display. An example of this AR capability is illustrated in FIG. **16**. Such an AR system may allow for "see-through" capability using an aligned camera and sensor on opposite sides of a user's limb. Various AR applications may be enabled by this type of arrangement, described herein. In particular embodiments, applications may be designed specifically for the device to allow for immediate, opportunistic use. Additionally, a delegation model may be provided on the device, allowing for the use of external resources to improve the breadth of applications available to run on the device while incurring less (or no) penalty in terms of processing requirements or energy use. In particular embodiments, the device may control or be controlled by other devices (e.g. nearby devices discovered via a network and communicatively paired with the device). This type of control may be achieved via proximity, gestures, or traditional interfaces. Pairing may be achieved using a variety of technologies including a camera of the device, discussed in further detail herein.

[0199] FIG. **125** illustrates an example of an automatic camera activation decision flow for the device. In particular embodiments, whether the camera is enabled and whether automatic activation of the camera (e.g. for object recognition) is enabled may depend on the application or mode the device is currently in. In particular embodiments, automatic camera activation may be enabled on the device **12510**. If this feature is enabled (determined at step **12520**) and if there is sufficient CPU capacity and power available on the device (e.g. to calculate features of interest from an image, determined at step **12530**), then a camera of the device (e.g. an outward-facing camera) may automatically capture, process, or display **12560** one or more images if the camera is held steadily in an aiming position by the user for a pre-determined amount of time (e.g. as detected by an inertial measurement unit on the wearable device or as calculated by the blurring of the image, determined at step **12540**). In other embodiments, the camera may be activated and searching for images at all times. In yet other embodiments, the camera may capture an image and perform feature recognition only if the user manually triggers image capture (e.g. pressing or clicking the outer ring, or tapping the display, determined at step **12550**). In particular embodiments, when the camera is activated (by any suitable method), augmented reality (AR) functionality may be enabled. The AR functionality may be automatically enabled (depending, e.g., on CPU capacity and power available on the device). In other embodiments, AR functionality may be explicitly enabled by the user via any suitable input by the user. The user may, for example, provide touch input on the display to enable AR functionality. As an example, a user may capture an object such as a bird (e.g. by pointing a camera of the device at the bird), and the user may touch the image of the bird as displayed on the display. This action may enable the AR functions of the device, causing, for example, the device to recognize the bird as an object and return information about the bird to the user. In other embodiments, as described herein, the user may perform one or more gestures to enable AR functionality, as well as to perform tasks using AR functionality (e.g. using a "virtual" keyboard by performing typing gestures in view of a camera of the device).

[0200] In particular embodiments, if the device does not have the capability to calculate features of interest itself, the device may capture an image, transfer the image to a communicatively coupled device (e.g. a nearby device such as a phone or personal computer) or to an Internet-based service,

where the features of interest may be calculated remotely. Once the features of interest are determined, an Internet-based service or local data catalog may be consulted for additional information about a recognized object. If information is found, the relevant data may be displayed to the user on the device along with the recognized feature.

[0201] The device may, in particular embodiments, have a small form factor and be constrained in terms of available memory, processing, and energy. A delegation model may allow the device to delegate portions of one or more processing tasks (e.g. tasks related to AR functionality) to nearby devices (e.g. phone or personal computer) or to network- or Internet-based services, for example. As an example, for delegable tasks, the application requiring the task provides the system (e.g. a kernel of an operating system of the device) with characteristics or a profile of the task, including the task's latency sensitivity, processing requirements, and network payload size. This may be done for each delegable subtask of the overall delegable task. Since tasks are often pipelined, contiguous chunks of the task pipeline may be delegated. The system may, in particular embodiments, take measurements of or build a model of one or more characteristics of the device. Characteristics of the device may include static properties of the device, e.g. properties of hardware components of the device including total memory installed, maximum CPU speed, maximum battery energy, or maximum bandwidth of a network interface. Characteristics of the device may also include dynamic properties of the device, e.g. operating properties of the device including available memory, current CPU capacity, available energy, current network connectivity, availability of network-based services, a tally of average user behavior among one or more users, or a predicted or expected processing time of a task (e.g. given a particular usage scenario). In particular embodiments, the device may have a model that incorporates previous and current measurements of device characteristics to aid in determining future device behavior. Based on the task characteristics or profile and these measurements or models, as well as based on whether the task may be executed on the device, the system may delegate (or not delegate) one or more portions of the task or task pipeline. For example, if the available memory on the device cannot support the processing of a task (e.g. playing a video), one or more portions of the task may be delegated. As another example, if the CPU capacity of the device cannot support processing a task (e.g. if the CPU is running at capacity due to its existing load), one or more portions of the task may be delegated. As another example, if a battery level of the device is low and the battery is not expected to provide energy to the device for as long as the expected processing time of the task, one or more portions of the task may be delegated. As another example, if the network connectivity of the device is low or non-existent, one or more portions of the task may not be delegated (e.g. if the device also has enough available memory, CPU capacity, and energy). As another example, if one or more network-based services are available to the device (e.g. cloud-based services for processing) and the device has suitable network connectivity (e.g. good available bandwidth), one or more portions of the task may be delegated. As another example, if a user of the device typically (e.g. historically) delegates the playing of videos, one or more portions of the task of playing a video may be delegated. As another example, if a predicted processing time of the task (e.g. predicted based on a model incorporating previous and current measurements of device characteristics) is beyond a certain threshold (e.g. several minutes), the task may be delegated. Any suitable characteristics of the device (e.g. static or dynamic properties) in any suitable combination may be used to determine whether to delegate a task. Furthermore, any suitable characteristics of a task of the device (e.g. including a task profile or characteristics of the task including latency sensitivity, processing requirements, or network payload size) may be used to determine whether to delegate a task, either alone or in conjunction with device characteristics. Additionally, any model of the device (e.g. device behavior) may be used, either alone or in conjunction with device or task characteristics, may be used to determine whether to delegate a task. In particular embodiments, devices paired with the device may also include a delegation model, such that the paired device (e.g. a phone) performs the same steps, delegating tasks based on its own models of energy, connectivity, runtime requirements, and feasibility. The delegated task may be processed or run to completion on the paired device (e.g. phone), and the results of processing the delegated task may be returned to the device. In particular embodiments, the device may operate in standalone mode (e.g. without delegating any processing tasks) when it does not have any network connectivity or when no paired devices are in range of the device. Once the device regains connectivity, or when a device is paired with the device, delegation of tasks may resume.

[0202] An example algorithm of a delegation model of the device is illustrated in FIG. **126**. In this example, a delegable task process begins on the device (**12610**). The system of the device performs a power use analysis and prediction (**12620**) (based, e.g., on the user's historical energy usage **12630** and the expected time until a charge of the device **12640**). Based on this, the system determines at step **12650** whether there is sufficient charge remaining for the required uptime of the delegable task. If sufficient charge remains, the system of the device may increase the power usage **12660** and process the delegable task on the device itself **12670**. If, however, the device does not have sufficient charge for the required uptime, the device may query a paired device (e.g. a phone) **12680** to determine the energy status of the paired device (**12690**). If, in the example of a phone, there is sufficient charge remaining on the phone for the required uptime, the task may be processed on the phone **12694**. If, however, there is not sufficient charge on the phone, the system may determine at step **12692** if the device has connectivity to an Internet-based (e.g. cloud) or other network-based service. If not, the device may delegate the process to the phone **12694**. If there is connectivity, the device may delegate the process to the cloud **12696**, where the task is processed and the results later returned to the device. In particular embodiments, delegable tasks may be delegated by the device in a divided fashion to one or more paired devices (e.g. mobile phones or personal computers) or network/Internet services. That is, delegable sub-tasks of a delegable task or process may be delegated by the device to different locations.

[0203] It is contemplated by this disclosure that a delegation model for a particular the device (or for a family or range of devices) may be dynamic or contextual. As an example, a delegation model may take into account available memory, CPU capacity, and available energy of a particular the device (or a family of devices), factors which may all change over time. The delegation model may also take into account the availability of network- or cloud-based services (and the capacity of each), as well as network connectivity (e.g. band-

width and latency), which may also change over time. For example, with reference to FIG. **127**, according to a first delegation model **12710** (which may, e.g., be applicable for devices manufactured in the next year), most processing may be evenly divided between the device and a paired device (e.g. smartphone), with only a small amount of delegation to a server of a cloud-based service. According to a second delegation model **12720** (which may, e.g., be applicable for devices manufactured in a three-year timeframe), most processing may be handled locally by the device (e.g. due to predicted advances in memory, CPU, and energy capacity in a small form factor). In this second model, some processing may be delegated to a server (e.g. more than in the first delegation model, due to improved network connectivity) and only a small amount of delegation may occur to the locally paired device. According to a third delegation model **12730** (which may, e.g., be applicable for devices manufactured in a five-year timeframe), all or almost all processing tasks may be evenly divided between the device and a server of a cloud-based service, with no or almost no processing being delegated to a locally-paired device. Any number of delegation models may be created, as the factors taken into account by a delegation model are dynamic. As an example, all or almost all tasks may be performed locally on the device according to one delegation model, and all or almost all tasks may be delegated by the device in another delegation model.

[0204] The device may choose to delegate functionality to a paired processing-rich device (e.g. phone, computer, tablet, television, set-top box, refrigerator, washer, or dryer) or to the Internet based on the energy reserves or connectivity bandwidth to each of these locations. For example, a device with a powerful processor may delegate to the paired device when low on energy, or it may choose to delegate to the Internet service when the paired device does not have sufficient power reserves. Likewise, the system of the device may choose to process locally if the connection to the Internet is showing higher latency to reduce the size of the data transfer.

[0205] In particular embodiments, an entire application or a portion of an application may be delegated by a user of the device to a paired device or vice versa. This may occur on a per-application basis. When the application on a target device (e.g. a television) is to be delegated to the device, the target device may send a request over the paired connection (possibly via an intermediary device, such as a smartphone or personal computer) to load the application on the device. The device may then act as a client to a server running on the paired device (e.g. television). Similarly, an application running on the device may be delegated to the paired device (e.g. a video playing on the device may be delegated to playing on a paired television). For example, if the device is running a first application, and a user of the device wants to interact with a second application, the device may automatically delegate a task of the first application to be processed by another device (e.g. a paired television).

[0206] FIG. **128** illustrates an example of a decision flow in the device operating according to a delegation model. In this example, an image-capture application is running on the device. A scene is captured on the device **12810**, and the device determines **12820** if it has sufficient CPU capacity for image feature calculations. If the device does have enough CPU capacity, it calculates the features of interest in the scene locally **12830**. If the device does not have sufficient CPU capacity, it may first determine **12840** if it is paired communicatively with another device with more processing capability (e.g. a mobile phone or a personal computer). If it is paired with such a device, the device may send data to the paired device so the paired device may calculate features of interest in the image **12850**. If the device is not paired with such a device, it may determine if it is connected to an Internet-based (e.g. cloud) service **12860**. If not, the device performs no further action. If so, the device may send data to the cloud service so the service may calculate features of interest in the scene **12870**. Features of interest may be calculated (wherever they are calculated) using any suitable algorithm including, for example, SURF. In this example, the features of interest may be compared to a local catalog or an Internet-based service to determine whether any matches are found (and if so, relevant information of interest) **12880**. If a match is found **12890**, the result may be presented to a user on the device **12895**. If no match is found, no further action is taken.

[0207] In particular embodiments, a camera or other optical sensor of the device may be used to recognize any gestures performed by the user (e.g. in the space between the camera and a target in the real world). These gestures may, for example, be used to act upon the data presented (e.g. the real world target, such as a sign including text) or may be used to point to particular items upon which augmented reality functions may be performed. For example, the user may point to a word on a sign, causing the device to translate it and display the translation to the user. FIG. **17** illustrates two examples of images captured by a camera of the device. In one example, a truck **1725** and the hand **1720** of a user of the device are both within the angle of view of a camera **1705** of the device and displayed by the device (shown at **1710**). As such, gestures performed by the user upon the truck may be recognized by the device and processed by device to provide, for example, AR functionality. In the second example, only the truck is within the angle of view of the camera (shown at **1715**), and as such, gestures performed by the user are not captured or recognized by the device. Gesture recognition may also be delegated by the device.

[0208] In particular embodiments, objects or images may be recognized by the device when they are within the frame of view of a camera of the device. As described herein, there may be multiple ways for the device to recognize an object. As one example, a gesture performed by the user (e.g. a pointing gesture indicating a particular object) may enable AR functionality on the device and cause the device to recognize the object. As another example, automatic object recognition may occur when, for example, the user positions the camera for a certain amount of time on a particular object (e.g. a section of text). As a third example, object recognition or AR functionality may be enabled explicitly by the user when, for example, the user taps or touches the display (or, e.g., clicks the outer ring) when the camera of the device has captured an object of interest. Global object recognition may, in some instances, be computationally intensive and error-prone. As such, in particular embodiments, a limiting set (e.g. the pages of a magazine or catalog or a catalog of a particular type of object such as plant leaves or book covers) may be applied to improve accuracy. There exist a number of choices for calculation of feature vectors from images, which the designer of the system for the device may select from. In some instances, the conversion of feature vectors between different approaches may be computationally expensive, so that the choice of the database of possible matches is replicated on the device. The calculation of feature vectors may be delegated, as described herein.

[0209] In particular embodiments, barcodes of various types may be recognized by the device. These barcodes may be used to query Internet-based services for additional data, as well as options to purchase, review, or bookmark the barcoded item for future review. While two-dimensional barcodes may generally be read directly, the system of the device may offer an addition close-focus mode for particularly small or one-dimensional barcodes to improve recognition rate. Should the system lack the ability to decode the barcode, it may simply focus the camera, take a picture, and delegate recognition to a remote service, as described herein. FIGS. **129**A-**129**D illustrate an example of barcode recognition mode. The device may be pointed at an item (**129**A), recognize the item (**129**B), display additional information obtained from the Internet about the item (**129**C), and provide the user an interface to purchase the item (**129**D).

[0210] In particular embodiments, the device may perform translation. Translation functionality may be divided into two portions: optical character recognition (OCR), and translation of recognized characters, words, or phrases. OCR may be completed on the device or delegated (e.g. to a paired processing device) to reduce the amount of data to be translated by the device. Simple word translations may be performed on the device or delegated (e.g. to a paired processing device). As with other functionality described herein, part or all of the recognition or translation process may be delegated as needed. The user may optionally use a gesture to indicate the word to be translated, as shown in FIG. **130** (e.g. the word "Warning"). Since individual words may be circumscribed by white space, the system may segment the word before attempting translation. Additionally, if the device can perform OCR with low latency, it may show the text to the user so that the user knows when the device is targeting and correctly recognizing the correct text. If automatic OCR is enabled, then the device may automatically identify images in the angle of view of an outward-facing camera and present on the device display information about the identified images. If automatic translation is enabled, then the device may automatically translate text in the angle of view of the outward-facing camera and present the translated text on the device display.

[0211] FIGS. **131**A-**131**D illustrate examples of the device operating in various augmented reality modes described herein, including barcode recognition mode (**131**A), image recognition mode (**131**B), OCR and translate mode (**131**C), and object recognition mode (**131**D).

[0212] FIG. **132** illustrates an example of the overall flow of actions for an augmented reality system for the device. Although this example illustrates an image capture application, any suitable task or process on the device may follow a similar flow. Additionally, any task after the device captures an image and before the device displays results to the user may (as suitable) be delegable by the device. In this example, an image from a camera of the device is captured (in the image capture section **13210**), pre-processed (in section **13220**), features are extracted and recognized to produce image recognition results (in section **13230**), and any objects may be recognized (in section **13240**). Object data may be formatted for action by a user of the device. The user may activate the augmented reality mode of the device **13211** (e.g. via a user gesture or pointing the camera of the device at an object for a pre-determined amount of time), and an image in the view of the camera **13212** may be captured (e.g. based on a trigger event such as a user input or automatic camera activation) by device camera **13213** to produce a camera image **13214**. At this point, the pre-processing stage **13220** may be entered. Pre-processing **13220** may, for example, include contrast enhancement, grayscale conversion, sharpening, or downsampling. In particular embodiments, the camera may operate in a general augmented reality mode in which anything in front of the camera may be processed and recognized. In other embodiments, the camera may operate in specific modes (e.g. OCR, barcode, or visual marker) and recognize only particular items when in such a mode. In particular embodiments, if it is determined that the image may include known shapes, symbols, or organizations of shapes or symbols (e.g. if the camera or device is in OCR mode, barcode mode, or visual marker mode), AR image processing may proceed on a first path. This first path begins with preliminary processing **13221**, proceeds to segmentation **13231** (which may, for example, determine symbol or symbol group boundaries such as letters or words), and commences with one or more of optical character recognition **13234** (e.g. if it is determined the image may contain characters, determining what those characters are), barcode recognition **13235** (e.g. if it is determined the image may contain a barcode, recognizing the barcode), or visual marker recognition (e.g. recognizing other types of visual markers) **13236** (e.g. for all other types of visual markers). The results of this first path are sent to object recognizer **13242**. In particular embodiments, if it is determined that the image may include features that are not necessarily known, AR image processing may proceed on a second path. The second path begins with feature extraction **13222** (e.g. in which the presence of edges or lines, changes in angles of lines, edges, points of interest, or patterns. are detected in the captured image). The second path proceeds to image recognition **13232**, in which the features of the image are compared with feature data from a recognition database **13233** (which may, for example, reside on the device, on a locally-paired device, or on a remote server or computer). The results of the image recognition comparison are provided **13237** and sent to the object recognizer **13242**. In the object recognition section **13240**, the first and second paths converge at the object recognizer **13242**. Here, results from an object database **13241** are used to recognize objects (e.g. that a phone recognized using the image recognition database **13233** is a particular brand and model of phone). Object data **13243** about the object recognized by recognizer **13242** (e.g. the price of the model of phone recognized, or where the phone may be available for purchase) may be provided. For text, there may be definitions or translations that occur and are displayed to the user. For barcodes, there may be product information and links to buy the recognized object that are displayed to the user. In particular embodiments, the data may be purely descriptive (e.g. the price of the phone) or may be active (e.g. a link where the user may purchase the phone). If the data includes action data **13244**, then an action controller **13250** (which controls, formats, and outputs a GUI for the user of the device) may show a UI to the user **13255** including the active data (e.g. the link for purchasing the phone). If the user selects an action **13260** (e.g. clicking the link), then the action controller shows the action UI to the user **13265** (e.g. opening of the link), and if the action is confirmed **13270**, then the action (e.g. the actual opening of the webpage associated with the link) is performed **13275**.

[0213] FIG. **133** illustrates an example of a network environment. As described herein, in particular embodiments, the device **13310** may be paired with other devices (e.g. nearby devices). The device may connect directly to a personal area network **13320** (which may bridge via other devices on the same network to a local area network), or the device may connect to a local area network **13330** directly. The personal area network may include, for example, non-WI-FI radio technology, such as BLUETOOTH, NFC, or ZIGBEE. The personal area network may, for example, include a smart media gateway **13322** (e.g. a media server), a smart TV **13324**, another processing provider **13326**, or a phone **13328**.

Phone **13328** may allow the device to connect to a cellular network **13340**, and from there to the Internet **13350**. The local area network **13330** may include, for example, WI-FI with or without authentication. The local area network may, for example, include a local wireless network router **13332**, smart media devices **13334**, smart appliances **13336**, and home automation technology **13338**. The local area network may, in turn, connect to the global Internet **13350** via, for example, local router **13332** that connects to an Internet service (e.g. a proprietary cloud service **13352** or other cloud service partners **13354**). Some devices may be reached by the device either via direct access (e.g. through the personal area network) or through the local area network. Those devices reachable by the device may be paired with the device and may be controlled by the device or control the device. The device may connect to the personal area network or the local area network using, for example, any suitable RF technology. As shown in FIG. **133**, pairing to a target device in the periphery may first occur over the RF network. This allows the device to know what is "nearby". This may happen over the personal area network (e.g. an ad-hoc or peer-to-peer network), or may use a mediated network such as **802.11** wireless (e.g. the local area network). Once a neighborhood is established, the device may request that nearby devices enter pairing mode. This may be done either directly or via a paired processing device with a greater gamut of connectivity options, such as a mobile phone. Once the target devices have entered pairing mode, they may exhibit their pairing signals. For example, devices with displays may show a visual tag on their display, while others may enable an NFC tag allowing for a scanner to identify them. Other approaches such as selection from a list or by pin code may also be used. Once a device is uniquely identified as a pairing target, the device may exchange a security token with the target device to finalize the pairing.

[0214] FIG. **134** illustrates an example of different types of pairing technology that may be used to pair a target device with the device. The target device, which may be a smart device such as a phone, may include passive NFC tags **13402** or active NFC transmitters **13404**(which may be recognized by a NFC tag reader **13420** and NFC decoder **13428** of the device); an NFC decoder **13406** (which may recognize NFC tags written by the NFC tag writer **13422** of the device), passive visual tags **13408** (e.g. stickers), barcodes **13410**, or other display information **13412** (which may be recognized by a camera **13424** of the device); or other pairing system **13416**. An active tag generator **13414** of the target device may create the display information **13412** or provide information to the other pairing system **13416** of the target device (which is recognized by a mirror pairing system **13426** with pairing code decoder **13438** of the device). The device may write data to NFC tags (e.g. with an NFC tag writer **13422**) to transmit this data to other target devices that may be paired to the device. Tags written by the device may be recognized by NFC tag decoders **13406** on a target device. The device may include any of a number of decoders including barcode decoder **13430**, visual tag decoder **13432**, image recognizer **13434**, or other image-based decoder **13436** (e.g. a decoder for QR codes, logos, or blink patterns of LEDs), all taking input from camera **13424** of the device. After the device receives and recognizes pairing information, it may decode (e.g. through a variety of decoders) the relevant information to proceed with pairing with the target device. In particular embodiments, pairing may be achieved using motion—a motion-sensitive target device (e.g. mobile phone or remote) may be paired with the device by holding and moving the target device in the same hand as the device (e.g. if both devices include accelerometers, the similar pattern of motion may be detected and used to pair the devices). As another example, a fixed target device may be paired with the device by, for example, tapping the fixed target device with a random pattern while holding the fixed target device in the same hand as the device (e.g. if both devices include touch detection, the similar pattern of tapping may be detected and used to pair the devices). Additionally, pairing may be done using audio—if the device and a target device both have audio reception capabilities, a user may make a sound (e.g. say a phrase) that both devices detect and then set up a pairing. Any suitable technology (including, e.g., augmented reality functions) of the device may be used to pair with and control local devices. The device and target device may each connect to other possible intermediary network devices **13440**, and also to a local area network **13450**.

[0215] FIG. **135** illustrates an example process for pairing a target device (e.g. using any of the methods described herein) with the device. Once pairing mode is enabled **13510**, the device determines if the RF network contains pairable target devices **13512**. If not, no further action is taken (e.g. the device may continue to scan periodically). If so, the device may request that the pairable devices enter pairing mode **13514**. The device may then proceed (in any order, or in a parallel fashion) to scan, via different available technologies, for available target devices. These may include NFC tag scans **13516**, visual tag scans in the camera's angle of view **13518**, barcode scans in the camera's angle of view **13520**, or any other method **13522**. If a target device is detected via one of these methods, the target device is paired to the device **13524**. Once the pairing has occurred, the device may show menu items to the user for controlling the paired device(s). The device may allow for both visual and motion-based gestural control of the paired devices. For example, the user may gesture (e.g. wave her hand) to change channels on a paired television, or may make a pinching gesture to transfer video media from the device to a paired display (using, e.g., AR functionality). Device control mediated over an RF network may be both local and securable. FIG. **136** illustrates example controls enabled on the device for a paired and controlled television including an active ON/OFF icon **13610**, favorite channels **13620**, a current channel display **13630**, and volume **13640**. As described herein, any suitable input from the user may be used to control functionality of a paired device. For example, gesture input, click or press input, or touch input may be used, for example, to change channels, adjust volume, or control other functions of the paired television.

[0216] In particular embodiments, a pairing and control model for the device may include the following characteristics. The device may function as the host for an application that interacts with or controls one or more functions of a remote device (e.g. an appcessory such as a controllable thermostat). A smartphone (or other locally-paired device), which may have previously been the host for the application, may now function merely as a local target device to which the device may delegate certain functions related to the interaction or control of the remote device (e.g. longer-range wireless connectivity to the remote device, sending commands to the remote device, receiving data from the remote device, or processing tasks). Control of the remote appcessory device may be done by the device using any suitable means including, for example, visual means (e.g. using the camera) or motion-based gestures. In other embodiments, the locally-paired smartphone may continue to function as the host for the application that interacts with the remote appcessory, but the device may provide some or all of the user interface for data input and output to and from the application (e.g. a "light" version of the application hosted by the smartphone). For example, the user may control the application using the device, but the smartphone may still function as the host of the application.

[0217] In particular embodiments, the device may be operable with one or more services. These services may fall in categories including security, energy, home automation and control, content sharing, healthcare, sports and entertainment, commerce, vehicles, and social applications.

[0218] Example security applications include the following. The device may authenticate a user (who is wearing the unlocked device) to another device near the user (e.g. paired with the device). The device may be unlocked with a code entered by the user using any suitable input including, for example, rotating the outer ring of the device. As an example, while a user rotates (or presses or clicks) the outer ring, the display may show alphanumeric or symbolic data corresponding to the rotation (or press or click) by the user. If, for example, the user rotates the outer ring one rotational increment in a clockwise direction (or, e.g., clicks or presses the outer ring once), the display may show the user a "1," and if the user rotates the outer ring two rotational increments (e.g. within a certain period of time, such as a millisecond) in a clockwise direction (or, e.g., clicks or presses the outer ring twice), the display may show the user a "2." In particular embodiments, the display of alphanumeric or symbolic data corresponding to a rotation (or press or click) by the user may allow the user to unlock the device using the metaphor of a combination lock. The device may also be unlocked using biometric data (e.g. by skin or bone signatures of the user).

[0219] In an example energy application, the device may automatically display information about the energy consumption of the room or other location in which the user is located. The device may also be able to display information about the energy consumption of other paired devices and update all of this information dynamically as the user changes location.

[0220] In an example home control application, the user may select and directly control paired home-control devices using, for example, rotation of the outer ring or a gesture input.

[0221] The user may use gestures to control the sharing or transfer of content to or from the device (e.g. transferring video playing on the device to a paired television, as described herein). Additionally, auxiliary information (e.g. movie subtitles) may be provided on the device for content shown on another, larger device (e.g. television screen playing the movie).

[0222] The device may automatically determine a healthcare context (e.g. if the user is exercising or sleeping). When it determines this context, the device may open applications corresponding to the healthcare context (e.g. for recording heart rate during exercise, movement during exercise, duration of exercise, pulse oximetry during exercise, sleep patterns, duration of sleep, or galvanic skin response). The device may, for example, measure a user's health-related data (e.g. heart rate, movement, or pulse oximetry) and send some or all of this data to a paired device or a server. Although illustrated in the healthcare context, the determination of a relevant context (e.g. based on a user's behavior), opening of corresponding applications, recording of data, or transmission of this data may be applicable in any suitable context.

[0223] The device may assist in sports-related applications such as, for example, automatically assessing a golf swing of the user and suggesting corrections.

[0224] In a commercial setting, the device may automatically identify a product (e.g. using RFID, NFC, barcode recognition, or object recognition) when the user picks up the product and may provide information about the product (e.g. nutrition information, source information, or reviews) or the option to purchase the product. Payment for the product may, for example, be accomplished using visual barcode technology on the device. In particular embodiments, the device may be used to pay for a product using NFC, RFID, or any other suitable form of short-distance communication. During payment, the user's information may, for example, be authenticated by the device, which may detect the user's biometric information (e.g. bone structure or skin signature). The device may also automatically provide an indication to the user (e.g. a vibration) when the user is near a product on her shopping list (e.g. stored in the device) or another list (e.g. a wish list of the user's friend).

[0225] The device may function as a key for unlocking or turning on one or more vehicles. The user may, for example, enter a code using the outer ring to unlock or turn on the vehicle (e.g. using NFC technology), as described earlier. In particular embodiments, both user biometric information and a code entered by the user may be required to unlock the car, allowing for enhanced security for a car-based application. Additionally, the device may include profiles for one or more users, each profile containing vehicle settings (e.g. temperature or seat position). As another example, biometric information of a particular user may be used not only to unlock the device, but also to determine which user profile to load during the car's operation. The proximity of the device to the vehicle may automatically cause the vehicle to implement the vehicle settings of the profile of the user. The device may also be operable for GPS navigation (either directly on the device or when paired with and controlling a phone, for example).

[0226] The device may access and operate in conjunction with a service that provides support for mixed-reality games or massively multi-player reality-based games. This functionality may, for example, include registration, management of user data (e.g. user profiles and game-related data such as levels completed or inventories of supplies), and management of accomplishment lists. The functionality of the device and the service may also include management of connectivity (e.g. concentrator functionality) that handles fragile wireless communication channels and provides a unified API to third party game servers.

[0227] The device may access and operate in conjunction with a service that allows a user of the device to publish locations, check-ins, or other location-based data that allows various services to access a consistent reservoir of the most current information regarding the position and status of the user. As an example, the user of the device may find friends using similar devices. The service and device together may handle status updates, profile management, application access permissions, blacklists, or user-to-user access permissions. The service may be a trusted and centralized touchpoint for private data. By combining access to a unified location service, energy and battery life may, in particular embodiments, be conserved. In particular embodiments, certain functionality tokens may be made available based on the position of the user. An application may, for example, check on the device to see if this token is available and act accordingly. On the server side, APIs may allow developers to see use of the tokens or allow for redemption. In particular embodiments, information may be distributed by the device to other users (e.g. a single other user, or in broadcast mode to multiple users).

[0228] The device may access and operate in conjunction with a service that provides a unified polling interface that allows devices to receive and send polls. The device and service together may manage distribution lists, scoring criteria, and poll availability frames (both temporal and geographic, for example). This service may be exposed on the device and on a server such that third parties may use APIs to write applications and receive results back via online APIs.

[0229] In particular embodiments, the device may access and operate in conjunction with a service that provides optimizations for the presentation of text, images, or other infor-

mation on a circular display of the device. As an example, a web site may be rendered or formatted for display on a computer monitor, but a service may customize the rendering and formatting for a smaller, circular display by emphasizing images and truncating text. The customized rendering and formatting may, for example, be a task delegable among the device and one or more servers or locally-paired devices. This service may also include news or advertising services.

[0230] FIG. **137** illustrates an example computer system **13700**. In particular embodiments, one or more computer systems **13700** perform one or more steps of one or more methods described or illustrated herein. In particular embodiments, one or more computer systems **13700** provide functionality described or illustrated herein. In particular embodiments, software running on one or more computer systems **13700** performs one or more steps of one or more methods described or illustrated herein or provides functionality described or illustrated herein. Particular embodiments include one or more portions of one or more computer systems **13700**. Herein, reference to a computer system may encompass a computing device, and vice versa, where appropriate. Moreover, reference to a computer system may encompass one or more computer systems, where appropriate.

[0231] This disclosure contemplates any suitable number of computer systems **13700**. This disclosure contemplates computer system **13700** taking any suitable physical form. As example and not by way of limitation, computer system **13700** may be an embedded computer system, a system-on-chip (SOC), a single-board computer system (SBC) (such as, for example, a computer-on-module (COM) or system-on-module (SOM)), a desktop computer system, a laptop or notebook computer system, an interactive kiosk, a mainframe, a mesh of computer systems, a mobile telephone, a personal digital assistant (PDA), a server, a tablet computer system, or a combination of two or more of these. Where appropriate, computer system **13700** may include one or more computer systems **13700**; be unitary or distributed; span multiple locations; span multiple machines; span multiple data centers; or reside in a cloud, which may include one or more cloud components in one or more networks. Where appropriate, one or more computer systems **13700** may perform without substantial spatial or temporal limitation one or more steps of one or more methods described or illustrated herein. As an example and not by way of limitation, one or more computer systems **13700** may perform in real time or in batch mode one or more steps of one or more methods described or illustrated herein. One or more computer systems **13700** may perform at different times or at different locations one or more steps of one or more methods described or illustrated herein, where appropriate.

[0232] In particular embodiments, computer system **13700** includes a processor **13702**, memory **13704**, storage **13706**, an input/output (I/O) interface **13708**, a communication interface **13710**, and a bus **13712**. Although this disclosure describes and illustrates a particular computer system having a particular number of particular components in a particular arrangement, this disclosure contemplates any suitable computer system having any suitable number of any suitable components in any suitable arrangement.

[0233] In particular embodiments, processor **13702** includes hardware for executing instructions, such as those making up a computer program. As an example and not by way of limitation, to execute instructions, processor **13702** may retrieve (or fetch) the instructions from an internal register, an internal cache, memory **13704**, or storage **13706**; decode and execute them; and then write one or more results to an internal register, an internal cache, memory **13704**, or storage **13706**. In particular embodiments, processor **13702** may include one or more internal caches for data, instructions, or addresses. This disclosure contemplates processor **13702** including any suitable number of any suitable internal caches, where appropriate. As an example and not by way of limitation, processor **13702** may include one or more instruction caches, one or more data caches, and one or more translation lookaside buffers (TLBs). Instructions in the instruction caches may be copies of instructions in memory **13704** or storage **13706**, and the instruction caches may speed up retrieval of those instructions by processor **13702**. Data in the data caches may be copies of data in memory **13704** or storage **13706** for instructions executing at processor **13702** to operate on; the results of previous instructions executed at processor **13702** for access by subsequent instructions executing at processor **13702** or for writing to memory **13704** or storage **13706**; or other suitable data. The data caches may speed up read or write operations by processor **13702**. The TLBs may speed up virtual-address translation for processor **13702**. In particular embodiments, processor **13702** may include one or more internal registers for data, instructions, or addresses. This disclosure contemplates processor **13702** including any suitable number of any suitable internal registers, where appropriate. Where appropriate, processor **13702** may include one or more arithmetic logic units (ALUs); be a multi-core processor; or include one or more processors **13702**. Although this disclosure describes and illustrates a particular processor, this disclosure contemplates any suitable processor.

[0234] In particular embodiments, memory **13704** includes main memory for storing instructions for processor **13702** to execute or data for processor **13702** to operate on. As an example and not by way of limitation, computer system **13700** may load instructions from storage **13706** or another source (such as, for example, another computer system **13700**) to memory **13704**. Processor **13702** may then load the instructions from memory **13704** to an internal register or internal cache. To execute the instructions, processor **13702** may retrieve the instructions from the internal register or internal cache and decode them. During or after execution of the instructions, processor **13702** may write one or more results (which may be intermediate or final results) to the internal register or internal cache. Processor **13702** may then write one or more of those results to memory **13704**. In particular embodiments, processor **13702** executes only instructions in one or more internal registers or internal caches or in memory **13704** (as opposed to storage **13706** or elsewhere) and operates only on data in one or more internal registers or internal caches or in memory **13704** (as opposed to storage **13706** or elsewhere). One or more memory buses (which may each include an address bus and a data bus) may couple processor **13702** to memory **13704**. Bus **13712** may include one or more memory buses, as described below. In particular embodiments, one or more memory management units (MMUs) reside between processor **13702** and memory **13704** and facilitate accesses to memory **13704** requested by processor **13702**. In particular embodiments, memory **13704** includes random access memory (RAM). This RAM may be volatile memory, where appropriate, and this RAM may be dynamic RAM (DRAM) or static RAM (SRAM), where appropriate. Moreover, where appropriate, this RAM may be single-ported or multi-ported RAM. This disclosure contemplates any suitable RAM. Memory **13704** may include one or more memories **13704**, where appropriate. Although this disclosure describes and illustrates particular memory, this disclosure contemplates any suitable memory.

[0235] In particular embodiments, storage **13706** includes mass storage for data or instructions. As an example and not by way of limitation, storage **13706** may include a hard disk drive (HDD), a floppy disk drive, flash memory, an optical

disc, a magneto-optical disc, magnetic tape, or a Universal Serial Bus (USB) drive or a combination of two or more of these. Storage **13706** may include removable or non-removable (or fixed) media, where appropriate. Storage **13706** may be internal or external to computer system **13700**, where appropriate. In particular embodiments, storage **13706** is non-volatile, solid-state memory. In particular embodiments, storage **13706** includes read-only memory (ROM). Where appropriate, this ROM may be mask-programmed ROM, programmable ROM (PROM), erasable PROM (EPROM), electrically erasable PROM (EEPROM), electrically alterable ROM (EAROM), or flash memory or a combination of two or more of these. This disclosure contemplates mass storage **13706** taking any suitable physical form. Storage **13706** may include one or more storage control units facilitating communication between processor **13702** and storage **13706**, where appropriate. Where appropriate, storage **13706** may include one or more storages **13706**. Although this disclosure describes and illustrates particular storage, this disclosure contemplates any suitable storage.

[0236] In particular embodiments, I/O interface **13708** includes hardware, software, or both, providing one or more interfaces for communication between computer system **13700** and one or more I/O devices. Computer system **13700** may include one or more of these I/O devices, where appropriate. One or more of these I/O devices may enable communication between a person and computer system **13700**. As an example and not by way of limitation, an I/O device may include a keyboard, keypad, microphone, monitor, mouse, printer, scanner, speaker, still camera, stylus, tablet, touch screen, trackball, video camera, another suitable I/O device or a combination of two or more of these. An I/O device may include one or more sensors. This disclosure contemplates any suitable I/O devices and any suitable I/O interfaces **13708** for them. Where appropriate, I/O interface **13708** may include one or more device or software drivers enabling processor **13702** to drive one or more of these I/O devices. I/O interface **13708** may include one or more I/O interfaces **13708**, where appropriate. Although this disclosure describes and illustrates a particular I/O interface, this disclosure contemplates any suitable I/O interface.

[0237] In particular embodiments, communication interface **13710** includes hardware, software, or both providing one or more interfaces for communication (such as, for example, packet-based communication) between computer system **13700** and one or more other computer systems **13700** or one or more networks. As an example and not by way of limitation, communication interface **13710** may include a network interface controller (NIC) or network adapter for communicating with an Ethernet or other wire-based network or a wireless NIC (WNIC) or wireless adapter for communicating with a wireless network, such as a WI-FI network. This disclosure contemplates any suitable network and any suitable communication interface **13710** for it. As an example and not by way of limitation, computer system **13700** may communicate with an ad hoc network, a personal area network (PAN), a local area network (LAN), a wide area network (WAN), a metropolitan area network (MAN), body area network (BAN), or one or more portions of the Internet or a combination of two or more of these. One or more portions of one or more of these networks may be wired or wireless. As an example, computer system **13700** may communicate with a wireless PAN (WPAN) (such as, for example, a BLUETOOTH WPAN), a WI-FI network, a WI-MAX network, a cellular telephone network (such as, for example, a Global System for Mobile Communications (GSM) network), or other suitable wireless network or a combination of two or more of these. Computer system **13700** may include any suitable communication interface **13710** for any of these networks, where appropriate. Communication interface **13710** may include one or more communication interfaces **13710**, where appropriate. Although this disclosure describes and illustrates a particular communication interface, this disclosure contemplates any suitable communication interface.

[0238] In particular embodiments, bus **13712** includes hardware, software, or both coupling components of computer system **13700** to each other. As an example and not by way of limitation, bus **13712** may include an Accelerated Graphics Port (AGP) or other graphics bus, an Enhanced Industry Standard Architecture (EISA) bus, a front-side bus (FSB), a HYPERTRANSPORT (HT) interconnect, an Industry Standard Architecture (ISA) bus, an INFINIBAND interconnect, a low-pin-count (LPC) bus, a memory bus, a Micro Channel Architecture (MCA) bus, a Peripheral Component Interconnect (PCI) bus, a PCI-Express (PCIe) bus, a serial advanced technology attachment (SATA) bus, a Video Electronics Standards Association local (VLB) bus, or another suitable bus or a combination of two or more of these. Bus **13712** may include one or more buses **13712**, where appropriate. Although this disclosure describes and illustrates a particular bus, this disclosure contemplates any suitable bus or interconnect.

[0239] Herein, a computer-readable non-transitory storage medium or media may include one or more semiconductor-based or other integrated circuits (ICs) (such, as for example, field-programmable gate arrays (FPGAs) or application-specific ICs (ASICs)), hard disk drives (HDDs), hybrid hard drives (HHDs), optical discs, optical disc drives (ODDs), magneto-optical discs, magneto-optical drives, floppy diskettes, floppy disk drives (FDDs), magnetic tapes, solid-state drives (SSDs), RAM-drives, SECURE DIGITAL cards or drives, any other suitable computer-readable non-transitory storage media, or any suitable combination of two or more of these, where appropriate. A computer-readable non-transitory storage medium may be volatile, non-volatile, or a combination of volatile and non-volatile, where appropriate.

[0240] Herein, "or" is inclusive and not exclusive, unless expressly indicated otherwise or indicated otherwise by context. Therefore, herein, "A or B" means "A, B, or both," unless expressly indicated otherwise or indicated otherwise by context. Moreover, "and" is both joint and several, unless expressly indicated otherwise or indicated otherwise by context. Therefore, herein, "A and B" means "A and B, jointly or severally," unless expressly indicated otherwise or indicated otherwise by context.

[0241] The scope of this disclosure encompasses all changes, substitutions, variations, alterations, and modifications to the example embodiments described or illustrated herein that a person having ordinary skill in the art would comprehend. The scope of this disclosure is not limited to the example embodiments described or illustrated herein. Moreover, although this disclosure describes and illustrates respective embodiments herein as including particular components, elements, feature, functions, operations, or steps, any of these embodiments may include any combination or permutation of any of the components, elements, features, functions, operations, or steps described or illustrated anywhere herein that a person having ordinary skill in the art would comprehend. Furthermore, reference in the appended claims to an apparatus or system or a component of an apparatus or system being adapted to, arranged to, capable of, configured to, enabled to, operable to, or operative to perform a particular function encompasses that apparatus, system, component, whether or not it or that particular function is activated, turned on, or unlocked, as long as that apparatus, system, or component is so adapted, arranged, capable, configured, enabled, operable, or operative.

[0242] While this disclosure describes particular structures, features, interactions, and functionality in the context of a wearable device, this disclosure contemplates that those structures, features, interactions, or functionality may be applied to, used for, or used in any other suitable electronic device (such as, for example, a smart phone, tablet, camera, or personal computing device), where appropriate.

What is claimed is:

1. A wearable apparatus comprising:
a sensor;
a processor coupled to the sensor; and
memory coupled to the processor that comprises instructions executable by the processor, the processor being operable when executing the instructions to:
detect by the sensor movement of at least a portion of an arm of a user;
detect, based at least in part on the movement, a gesture made by the user; and
process the gesture as input to the wearable apparatus.

2. The wearable apparatus of claim **1**, wherein the wearable apparatus is worn on the other arm of the user.

3. The wearable apparatus of claim **1**, wherein the portion of the arm comprises at least a portion of the hand of that arm.

4. The wearable apparatus of claim **3**, wherein the portion of the hand comprises at least one finger.

5. The wearable apparatus of claim **1**, wherein the processor is further operable when executing the instructions to:
detect by the sensor a lack of movement of at least a portion of the arm of the user; and
detect the gesture based at least in part on the lack of movement of the portion of the arm of the user.

6. The wearable apparatus of claim **1**, wherein the processor is further operable when executing the instructions to detect the gesture based at least in part on a duration of the movement.

7. The wearable apparatus of claim **1**, wherein the processor is further operable when executing the instructions to:
detect by the sensor an absence of the portion of the arm of the user; and
detect the gesture based at least in part on the absence.

8. The wearable apparatus of claim **1**, wherein the processor is further operable when executing the instructions to:
to detect an orientation of the portion of the arm of the user; and
detect the gesture based at least in part on the orientation.

9. The wearable apparatus of claim **8**, wherein detecting an orientation of the portion of the arm of the user comprises:
detecting an initial orientation of the portion of the arm of the user; and
detecting a subsequent orientation of the portion of the arm of the user.

10. The wearable apparatus of claim **1**:
further comprising another sensor;
wherein the processor is further operable when executing the instructions to:
detect by the other sensor a movement of the wearable apparatus; and
detect the gesture based at least in part on the movement of the wearable apparatus.

11. The wearable apparatus of claim **1**, wherein the processor is further operable to detect the gesture based at least in part on a setting specified by a software application associated with the wearable apparatus.

12. The wearable apparatus of claim **1**, wherein:
the movement comprises a movement indicating an interaction with an object;
detecting a movement of at least some of the portion of the arm of the user comprises detecting the movement of the object; and
the processor is further operable to detect the gesture based at least in part on the movement of the object.

13. The wearable apparatus of claim **1**, comprising:
a device body comprising:
a touch-sensitive display;
a rotatable element about the touch-sensitive display; and
an encoder for detecting rotation of the rotatable element;
a band for affixing the device body to the user; and
the sensor, comprising an optical sensor in or on the band communicably coupled to the touch-sensitive display.

14. One or more computer-readable non-transitory storage media embodying software that is operable when executed to:
detect by a sensor a movement of at least some of the portion of an arm of a user;
detect, based at least in part on the movement, a gesture made by the user; and
process the gesture as input to a wearable computing device.

15. The media of claim **14**, wherein the wearable computing device is worn on the other arm of the user.

16. The media of claim **14**, wherein the portion of the arm comprises at least a portion of the hand of that arm.

17. The media of claim **16**, wherein the portion of the hand comprises at least one finger.

18. The media of claim **14**, wherein the software is further operable when executed to:
detect by the sensor a lack of movement of at least some of the portion of the arm of the user; and
detect the gesture based at least in part on the lack of movement of the portion of the arm of the user.

19. The media of claim **14**, wherein the software is further operable when executed to detect the gesture based at least in part on a duration of the movement.

20. The media of claim **14**, wherein the software is further operable when executed to:
detect by an absence of the portion of the arm of the user; and
detect the gesture based at least in part on the absence.

21. The media of claim **14**, wherein the software is further operable when executed to:
detect an orientation of the portion of the arm of the user; and
detect the gesture based at least in part on the orientation.

22. The media of claim **21**, wherein, to detect an orientation of the portion of the other arm of the user, the software is operable when executed to:
detect an initial orientation of the portion of the arm of the user; and
detect a subsequent orientation of the portion of the arm of the user.

23. The media of claim **14**, wherein the software is further operable when executed to:
detect by another sensor a movement of the wearable computing device; and
detect the gesture based at least in part on the movement of the wearable computing device.

24. The media of claim **14**, wherein the software is further operable when executed to detect the gesture based at least in part on a setting specified by a software application associated with the wearable computing device.

25. The media of claim **14**, wherein:
the movement comprises a movement indicating an interaction with an object;
detecting a movement of at least some of the portion of the arm of the user comprises detecting the movement of the object; and

the software is further operable when executed to detect the gesture based at least in part on the movement of the object.

26. The media of claim **14**, wherein the wearable computing device comprises:

a device body comprising:

a touch-sensitive display;

a rotatable element about the touch-sensitive display; and

an encoder for detecting rotation of the rotatable element;

a band for affixing the device body to the user; and

an optical sensor in or on the band communicably coupled to the touch-sensitive display.

27. A method comprising:

detect by a sensor a movement of at least some of the portion of an arm of a user;

detect, by a wearable computing device, based at least in part on the movement, a gesture made by the user; and

process the gesture as input to the wearable computing device.

28. The method of claim **27**, wherein the wearable computing device is worn on the other arm of the user.

29. The method of claim **27**, wherein the portion of the arm comprises at least a portion of the hand of that arm.

30. The method of claim **29**, wherein the portion of the hand comprises at least one finger.

31. The method of claim **27**, further comprising detecting by the sensor a lack of movement of at least some of the portion of the arm of the user, wherein the gesture is further determined based at least in part on the lack of movement of the portion of the arm of the user.

32. The method of claim **27**, wherein the gesture is further determined based at least in part on a duration of the movement.

33. The method of claim **27**, further comprising detecting by the sensor an absence of the portion of the arm of the user, wherein the gesture is determined based at least in part on the absence.

34. The method of claim **27**, further comprising detecting an orientation of the portion of the arm of the user, wherein the gesture is further determined based at least in part on the orientation.

35. The method of claim **34**, wherein detecting an orientation of the portion of the arm of the user comprises:

detecting an initial orientation of the portion of the arm of the user; and

detecting a subsequent orientation of the portion of the arm of the user.

36. The method of claim **27**, further comprising detecting a movement of the wearable computing device, wherein the gesture is further determined based at least in part on the movement of the wearable computing device.

37. The method of claim **27**, wherein the gesture is further determined based at least in part on a setting specified by a software application associated with the wearable computing device.

38. The method of claim **27**, wherein:

the movement comprises a movement indicating an interaction with an object;

detecting a movement of at least some of the portion of the arm of the user comprises detecting the movement of the object; and

the gesture is further determined based at least in part on the movement of the object.

39. The method of claim **27**, wherein the wearable computing device comprises:

a device body comprising:

a touch-sensitive display;

a rotatable element about the touch-sensitive display; and

an encoder for detecting rotation of the rotatable element;

a band for affixing the wearable computing device body to the user; and

the sensor, comprising an optical sensor in or on the band communicably coupled to the touch-sensitive display.

* * * * *